United States Court of Appeals

for the

District of Columbia Circuit

TRANSCRIPT OF RECORD

Vol. I

TRANSCRIPT OF RECORD

United States Court of Appeals for the District of Columbia

APRIL TERM, 1936.

No. 6855

75

CARL A. JOERISSEN, APPELLANT,

vs.

REMINGTON RAND, INC., A CORPORATION OF MARYLAND AND

REMINGTON RAND, INC., A CORPORATION OF DELAWARE.

APPEAL FROM THE DISTRICT COURT OF THE UNITED STATES FOR THE DISTRICT OF COLUMBIA.

FILED OCTOBER 2, 1936

PRINTED DECEMBER 2, 1936

United States Court of Appeals for the District of Columbia

APRIL TERM, 1936.

No. 6855

CARL A. JOERISSEN, APPELLANT,

vs.

REMINGTON RAND, INC., A CORPORATION OF MARYLAND AND

REMINGTON RAND, INC., A CORPORATION OF DELAWARE, APPELLEES.

APPEAL FROM THE DISTRICT COURT OF THE UNITED STATES FOR THE DISTRICT OF COLUMBIA.

INDEX.

	Original	Print
Caption	a	1
Amended bill of complaint	1	1
Answer to amended bill	6	6
Plaintiff's motion for bill of particulars	15	14
Defendants' motion for interrogatories	21	18
Plaintiff's answers to defendant's interrogatories	23	19
Plaintiff's motion for interrogatories	25	23
Photostatic copies of bills	27	21
Defendants' answers to interrogatories	28	24
Defendants' Bill of Particulars	30	25
Photostatic copies of Whispers, &c.	37	31
Opinion of court	43	30
Findings of fact	44	38

PRESS OF BYRON S. ADAMS, WASHINGTON, D. C.

	Original	Print
Conclusions of law	46	39
Exception noted by plaintiff, &c.	47	40
Final decree; exception of plaintiff noted; plaintiff petitions for and notes an appeal from decree	47	40
Maximum undertaking for costs fixed	48	41
Memoranda: $50 deposited in lieu of bond on appeal; time to file statement of evidence extended	48	41
Assignments of error	49	41
Order making statement of evidence part of record	52	43
Stipulation as to exhibits	53	43
Designation of record on Appeal	59	48
Clerk's Certificate	61	49
Statement of evidence	62	50
Testimony of Charles Alexander Mason	64	51
" " Frederick W. Schremp	84	65
" " George G. Going	102	77
" " Charles E. Smith	114	85
" " Carl A. Joerissen	130	111
" " Charles W. Gosnell	146	108
" " Frederick W. Schremp (recalled)	150	111
Plaintiff's Exhibit 1—Patent Re. 19,076	154	115
" " 2— " No. 1,846,339	164	125
" " 3—File Wrapper and Contents	176	137
" " 4— " " " "	238	169
Examiner's Statement	281	203
" "	289	210
Decision of Commissioner of Patents	299	219
Plaintiff's Exhibit 5—File Wrapper and Contents	349	246
Examiner's Statement	373	281
" "	384	290
" "	390	295
" "	400	304
" "	407	315
" "	418	323
Decision of Commissioner of Patents	420	324
Plaintiff's Exhibit 6—Patent 1,856,340	442	339
" 403,075	451	348
" 567,241	459	356
" 567,242	462	359
" 735,090	467	364
" 833,281	473	370
" 842,586	477	374
" 885,346	483	380
" 900,931	488	385
" 1,122,764	494	391
" 1,123,771	500	397
" 1,214,371	508	405
" 1,261,751	515	412
" 1,261,752	536	433
" 1,282,410	551	448

	Original	Print
" 1,289,731	555	452
" 1,312,820	558	455
" 1,312,821	580	477
" 1,471,152	594	491
" 1,471,153	602	499
" 1,491,475	607	504
" 1,561,450	613	510
" 1,565,554	634	531
" 1,573,544	637	534
" 1,574,285	658	555
" 1,615,694	674	571
" 1,615,835	681	578
" 1,760,641	687	584
" 1,908,140	694	591
Plaintiff's Exhibit 11	714	611
" 12	715	612
" 13	716	613
" 14	717	614
" 15	718	615
Defendant's Exhibit D 1	719	616
" D 2	720	617
" D 3	721	618
" G 1	722	619
" G 2	723	620
" G 3	724	621
" K	725	622
" L	743	640
" M	760	657
" O-1	776	675
" O-2	777	674
" O-3	778	675
" P	779	676
" Q	780	677
" R-1	781	678
" R-2	782	679
" R-3	783	680
" S	784	681
" T	785	682
" W	786	683
Stipulation as to printing record	787	685

United States Court of Appeals for the District of Columbia

a District Court of the United States for the District of Columbia.

No. 56895 In Equity

Carl A. Joerissen, *Plaintiff*,

vs.

Remington Rand, Inc., a corporation of Maryland,

and

Remington Rand, Inc., a corporation of Delaware,

Defendants.

United States of America,
District of Columbia, ss:

BE IT REMEMBERED, That in the District Court of the United States for the District of Columbia, at the City of Washington, in said District, at the times hereinafter mentioned, the following papers were filed and proceedings had, in the above-entitled cause, to wit:—

1 *Amended Bill of Complaint.*

Filed October 5 1934

In the Supreme Court of the District of Columbia

In Equity

Equity No. 56,895

Reissued United States Letters
Patent, Reissue No. 19,076.
Reissued February 13, 1934,
Typewriting Machine.

Carl A. Joerissen,

v.

Remington Rand, Inc., a Corporation of Maryland.

and

Remington Rand, Inc., a Corporation of Delaware.

To the Honorable, the Judges of the Supreme Court of the District of Columbia, Sitting in Equity:—

Plaintiff, Carl A. Joerissen, for his Amended Bill of Complaint, alleges that:

1. This suit arises under the Patent Laws of the United States for infringement and threatened infringement by Co-defendants of Reissued United States Letters Patent, Reissue No. 19,076 (original Patent No. 1,846,339, dated February 23, 1932), duly reissued to Plaintiff February 13, 1934, for Improvements in Typewriting Machines.

2. Plaintiff, Carl A. Joerissen, is a citizen of the United States, residing in Washington, in the District of Columbia. Co-defendant, Remington Rand, Inc., is a Corporation organized and existing under and by virtue of the laws of the State of Maryland, and has an established place of business and is doing business at 1106 G Street, N. W., in the City of Washington, District of Columbia, where it, as subsidiary and/or affiliated with and/or as selling corporation for Co-defendant, Remington Rand, Inc., of Delaware, has committed and is committing the acts of infringement and threatens to continue the acts of infringement herein complained of, by the selling and the offering for sale of the machines complained of, and which machines are manufactured by the Co-defendant and parent Company,
2 Remington Rand, Inc., a Corporation of Delaware, having an established place of business at 465 Washington Street, Buffalo, New York, and where it has committed and is committing acts of infringement and threatens to continue the acts of infringement herein complained of, by the manufacture, as parent Company of Remington Rand, Inc., of Maryland, of the machines sold by Remington Rand, Inc., of Maryland, Co-defendant.

3. On February 23, 1932, said Letters Patent No. 1,846,339 for improvements in Typewriting Machines were duly issued to Plaintiff in accordance with the laws of the United States in such cases made and provided, on an application duly filed in the United States Patent Office by Plaintiff on March 22, 1926, Serial No. 96,602.

4. Plaintiff, in or about the early part of 1929, and prior to the issuance of his Patent No. 1,846,339, here involved, submitted his invention to Co-defendant, Remington Rand, Inc., of Delaware, by showing the officials and engineers of said Co-defendant a complete typewriting machine embodying his invention, and at the same time explained in detail the mechanical principles and operation involved

and the mechanical construction for carrying out such operation, with a view of interesting Co-defendant in the invention, but that Co-defendant declined to enter into any satisfactory agreement with Plaintiff as to taking over Plaintiff's invention, but notwithstanding this offer of Plaintiff made to Co-defendant to take up the invention, Co-defendant thereafter flagrantly and in defiance of Plaintiff's rights, and utilizing the knowledge imparted to it by Plaintiff, did adopt the mechanical principles and mode of operation invented by Plaintiff and, disregarding the rights of Plaintiff, made and sold or procured the selling of the machines complained of embodying the invention of Plaintiff.

5. Plaintiff thereafter, on or about December 15th,
3 1933, made application in writing to the Commissioner of Patents for the reissue of Letters Patent No. 1,846,339, issued February 23, 1932, alleging that the said Letters Patent were inoperative or invalid by reason of a defective or insufficient specification and that such error arose through inadvertence, accident or mistake and without any fraudulent or deceptive intention; and surrendered said Letters Patent and paid the fee as required by law and in all other respects duly complied with the requirements of the Statutes of the United States in such cases made and provided; whereupon the Commissioner of Patents caused Reissue Letters Patent for the same invention as that disclosed in the original Patent No. 1,846,339 to be issued to Plaintiff and bearing date the 13th day of February, 1934, and numbered Reissue No. 19,076, granting to Plaintiff, his assigns or other legal representatives for the unexpired part of the term of the original Letters Patent No. 1,846,339, dated February 23, 1932, the exclusive right of making, using and vending the said machine throughout the United States and the territories thereof as by said original Reissue Letters Patent or a duly certified copy of said Reissue Letters Patent Reissue No. 19,076, of which profert is hereby made will more fully and largely appear.

6. Plaintiff is, and has been at all times since the issuance of said Letters Patent No. 1,846,339, reissued February 13, 1934, Reissue No. 19,076, owner of the entire right, title, and interest, in said Letters Patent and all rights to sue

and recover for all infringement and threatened infringement thereof.

7. Prior to the filing on March 22, 1926 of the said application, Serial No. 96,602, which matured into original Letters Patent No. 1,846,339, and thereafter reissued under date of February 13, 1934, as Reissue Patent No. 19,076,
4 and prior to the filing on December 15, 1933, of application for the reissue of said Letters Patent, which application for reissue resulted in Reissue Patent No. 19,076, reissued February 13, 1934, Plaintiff, said Carl A. Joerissen, invented the new and useful improvements in Typewriting Machines disclosed and claimed in said application. These improvements were not known or used by others in this Country before Plaintiff's invention or discovery thereof, were not patented or described in any printed publication in this or any foreign country before Plaintiff's invention or discovery thereof or more than two (2) years prior to Plaintiff's said application for patent, and not in public use or on sale in this Country before Plaintiff's invention or discovery thereof or more than two (2) years prior to the filing of Plaintiff's said application, and not patented by Plaintiff in any foreign country on an application filed more than twelve (12) months prior to the filing of Plaintiff's said application in this Country.

8. Plaintiff is informed and believes, and therefore avers, that Defendants have infringed upon the exclusive rights of Plaintiff under said original and said reissued Letters Patent by making, and using, and selling or procuring the making of, and the using of, and the selling of, subsequent to the issuance and reissuance of said Letters Patent and prior to the filing of this Complaint, typewriting machines embodying the invention described in said original and said Reissue Letters Patent and defined in the claims thereof, and Plaintiff further avers that Defendants threaten to continue to make, use, and sell, or to procure the making of, and the using of, and the selling of, typewriting machines embodying the invention described and claimed in said Letters Patent, in infringement of the exclusive right of Plaintiff thereunder.

9. Defendants have been duly notified of this infringement of Plaintiff's original Letters Patent No.

5 1,846,339, issued February 23, 1932, and of infringement of Plaintiff's Reissue Patent No. 19,076, issued February 13, 1934, but have nevertheless since said notices continued the acts of infringement and threatened infringement.

10. The invention of said original and Reissue Letters Patent is of great value to Plaintiff.

11. Plaintiff is informed and believes, and therefore avers, that the infringement by Defendants complained of has resulted in profit to the said Defendants, but the amount of said profit derived by Defendants from its infringement Plaintiff is not now in position to ascertain or state.

WHEREFORE, Plaintiff prays:

That a *subpoena ad respondum* issue out of this Honorable Court directed to Defendants, and calling upon Defendants to make answer to this said Amended Bill of Complaint, but not under oath, answer under oath being expressly waived.

For an injunction restraining the Defendants, their officers, agents, and employees from making or procuring the making, or using, or selling, or threatening to make or to procure the making, or using, or selling, or aiding in the making, or using, or selling, of typewriter constructions embodying the invention of said original and Reissued Letters Patent, or otherwise infringing upon or contributing to the infringement of Plaintiff's exclusive rights under said Letters Patent.

For an accounting of Defendants' profits, and, in view of the flagrant character of Defendants' acts herein complained of, that treble damages be imposed on said Defendants, and for such other and further relief as to this Court may seem just and proper.

6 CARL A. JOERISSEN

DOUGLAS OBEAR MORGAN & CAMPBELL
CUSHMAN, DARBY & CUSHMAN
Counsel.

CHAS. A DOUGLAS
ARLON V. CUSHMAN
GORHAM F. FREER
Of Counsel.

DISTRICT OF COLUMBIA: *ss.*

Carl A. Joerissen, being duly sworn, deposes and says that he is the Plaintiff named in the foregoing Amended Bill of Complaint, that he has read the same and knows the contents thereof, that the same is true of his own knowledge, except as to matters therein stated to be on information and belief, and as to these matters he believes it to be true.

CARL A. JOERISSEN

Subscribed and sworn to before me, a Notary Public, this 13th day of June, 1934.

THERESA BUCKHANTZ
(Seal) *Notary Public.*

Answer to Amended Bill of Complaint

Filed November 19 1934

* * * * * * * *

To the Honorable the Judges of the Supreme Court of the District of Columbia, Sitting in Equity.

For answer to the amended bill of complaint herein, defendants aver as follows:

1. With respect to the amended bill of complaint, paragraph 1, defendants deny each and every allegation therein except that they admit that this suit was brought under the patent laws of the United States.

7 2. Answering paragraph 2 of the amended bill of complaint, defendants are not advised as to the citizenship and residence of the plaintiff, and, therefore, deny the allegations with respect thereto and leave plaintiff to make such proofs thereof as he may be advised. Further answering paragraph 2, defendants admit that Remington Rand Inc., a corporation of Maryland, is a corporation organized and existing under and by virtue of the laws of the State of Maryland and has an established place of business and is doing business at 1106 G St. N. W., Washington, D. C.; that said corporation is affiliated with Remington Rand Inc. of Delaware, and that Remington Rand Inc., a corporation of Delaware, has an established place of business at 465 Washington Street, Buffalo, New York. Fur-

ther answering paragraph 2, defendants deny each and every other allegation thereof.

3. Answering paragraph 3 of the amended bill of complaint, defendants admit that Letters Patent No. 1,846,339 were issued to plaintiff on or about February 23, 1932, on an application filed in the United States Patent Office on March 22, 1926, Serial No. 96,602, but deny each and every other allegation thereof.

4. Defendants deny each and every allegation contained in paragraph 4 of the amended bill of complaint. Defendants admit that a typewriting machine was disclosed to some of the officials and engineers of Remington Rand Inc., of Delaware, on or about March 6, 1929, but defendants specifically deny that said machine then disclosed embodied the alleged invention recited in the claims of patent No. 1,846,339 or Reissue Patent 19,076, and specifically deny that the alleged invention of said Letters Patent or said Reissue Letters Patent or the structure of the disclosure referred to has been utilized or adapted by defendants in making, selling or procuring the sale of typewriting machines.

5. Answering paragraph 5 of the amended bill of
8 complaint, defendants deny each and every allega-
tion thereof, except that they admit that application for the reissue of Letters Patent No. 1,846,339 was made on or about December 15, 1933, and that on or about February 13, 1934 Reissue Patent No. 19,076 was issued thereon to plaintiff.

6. Answering paragraph 6 of the amended bill of complaint, defendants have no knowledge of the matters stated therein, and, therefore, deny the same and leave plaintiff to make such proofs thereof as he may be advised.

7. Defendants deny each and every allegation of paragraph 7 of the amended bill of complaint, except that they admit that application for Letters Patent was filed, on or about March 22, 1926, Serial No. 96,602, which resulted in issuance of Letters Patent No. 1,846,339; that an application for reissue of said Letters Patent was filed on or about December 15, 1933, which application for reissue resulted in the issuance to Carl A. Joerissen on or about February 13, 1934, of Reissue Patent No. 19,076.

8. Defendants deny each and every allegation of paragraph 8 of the amended bill of complaint.

9. Answering paragraph 9 of the amended bill of complaint, defendants admit that prior to the filing of the amended bill of complaint they had notice of Reissue Patent No. 19,076, issued upon application to reissue Letters Patent No. 1,846,339, but defendants deny that either before or since receipt of such notice they have committed or continued to commit any act or acts constituting the infringement or threatened infringement complained of.

10. In answer to paragraph 10 of the amended bill of complaint, defendants have no knowledge of what, if any, value the alleged invention of the original and Reissue Letters Patent may be to plaintiff, and, therefore,
9 deny the allegation, and leave plaintiff to make such proofs thereof as he may be advised.

11. Defendants in answer to paragraph 11 of the amended bill of complaint deny that they have committed any act or acts of infringement complained of, and, therefore, assert that they could not have made any profit by reason of the alleged patent rights of plaintiff.

12. Defendants, intending to make full and complete answer and defense to the allegations of the amended bill of complaint herein, deny, upon information and belief, each and every allegation thereof, except as hereinbefore or hereinafter specifically admitted.

13. Further answering, defendants allege, upon information and belief, that the alleged invention described and claimed in said Letters Patent Reissue No. 19,076, was not patentable to said Joerissen at the date of his alleged invention or discovery thereof, in view of the state of the art at that time and as known and practiced in this country by various persons at various places, as hereinafter mentioned, and as described in various patents and publications, and that said alleged invention required for its production, at and prior to said date, only the exercise of ordinary skill and knowledge, such as were possessed generally by those skilled in the art.

14. Defendants, further answering, allege on information and belief, that said Letters Patent Reissue No. 19,076 are invalid for the following reasons:

(a) That the thing patented in said Letters Patent has been patented and described prior to the alleged invention or discovery thereof in the following Letters Patent of the United States:

10 Inventor	Date	Patent No.
Kidder	Sept. 8, 1896	567,241
Kidder	Sept. 8, 1896	567,242
Jackson	Apr. 21, 1908	885,346
Jackson	Oct. 13, 1908	900,931
Kidder	Dec. 29, 1914	1,122,764
Roberts	June 27, 1916	1,188,835
Roberts	Jan. 30, 1917	1,214,371
Anderson	Apr. 9, 1918	1,261,751
Anderson	Apr. 9, 1918	1,261,752
Going	Oct. 22, 1918	1,282,410
Anderson	Aug. 12, 1919	1,312,820
Anderson	Aug. 12, 1919	1,312,821
Barney	June 12, 1923	1,458,125
Going	Oct. 16, 1923	1,471,152
Going	Oct. 16, 1923	1,471,153
Hess	Jan. 1, 1924	1,479,715
Hess	Apr. 1, 1924	1,488,920
Going	Apr. 22, 1924	1,491,475
Reichers	June 17, 1924	1,498,402
Seifert	July 14, 1925	1,546,112
Going	Nov. 10, 1925	1,561,450
Eriksen	Dec. 15, 1925	1,565,554
Going	Feb. 16, 1926	1,573,544
Going	Feb. 23, 1926	1,574,285

(b) That the thing patented in said Letters Patent has been patented and described prior to the alleged invention or discovery thereof in Letters Patent of the United States and foreign countries and also in printed publications not now known to these defendants, but which, when ascertained, defendants pray leave to add to this answer.

(c) That the thing patented in said Letters Patent has been patented and described in the following Letters Patent of the United States filed prior to the alleged invention or discovery thereof by said Joerissen:

Inventor	Date	Patent No.
Perky	Oct. 26, 1926 (filed Apr. 18, 1923)	1,604,851
Going	Jan. 25, 1927 (filed Apr. 16, 1924)	1,615,694
Going	Feb. 1, 1927 (filed Apr. 16, 1924)	1,615,835

(d) That the alleged inventor, Joerissen, was not the first, true, original or sole inventor or discoverer of the invention purported to be covered by said Letters Patent, or of any material or substantial part thereof, and that the same or material or substantial parts thereof had
11 been known or in public use or on sale in this country prior to the alleged invention thereof and more than two years prior to the said original application therefor, and that the persons who had knowledge of and made use of the alleged invention of said patent or of material or substantial parts thereof prior to the said alleged invention thereof and for more than two years prior to the said original application for Letters Patent, are those persons named as patentees and assignees listed in the preceding paragraphs (a) and (c), which persons reside in and knew of or used the same at the respective places stated as their addresses in said patents and publications, and that defendants, their predecessors in business and their employees and officers had knowledge of and made use of the same at defendants' and their predecessors' places of business, and that in addition, other persons had knowledge of and made use of the same, whose names, addresses and places of use or knowledge, are at present unknown to the defendants, but which when known, they pray leave to insert in this answer by amendment.

(e) That the said Reissue Letters Patent in suit do not describe the alleged invention or inventions thereof as required by law in such full, clear and exact terms as to enable any person skilled in the art or science to which said Reissue Letters Patent appertains to make or use the same, and do not point out and distinctly claim the parts or improvements claimed as the patentee's alleged invention or inventions as required by law.

(f) That the alleged invention or inventions set forth in said Reissue Letters Patent in suit are inoperative and devoid of utility for the reason that each type action as disclosed will not operate and is incapable of operation in the manner stated in the patent, and for the further reason that there is no disclosure of how a plurality of such ac-
12 tions, sufficient in number to constitute a complete typewriting machine, can be employed, and for the further reason that a number of such actions, sufficient to constitute a complete typewriting machine can not be employed in any manner to produce an operative typewriting machine.

(g) That the said Reissue Letters Patent in suit are invalid for failure to distinctly point out the alleged invention thereof as required by law, in that the claims thereof are unduly multiplied in number and do not patentably distinguish one from the other.

(h) That claims 23 to 28 in said Reissue Letters Patent in suit are invalid because the alleged inventions had been patented to the said patentee in earlier issued patents, to wit:

Joerissen patents Nos. 1,753,890 and 1,829,832

(i) That said Reissue Letters Patent was improvidently granted and was not granted in accordance with the Statute 4916, R. S. U. S.

15. Defendants allege that during the prosecution of the original application for said Letters Patent No. 1,846,339, which resulted in said Letters Patent Reissue No. 19,076, the alleged invention therein claimed was limited in scope and that the plaintiff is now estopped to assert a construction for the claims thereof of sufficient scope to cover any device or devices manufactured, used or sold, or caused to be manufactured, used or sold by these defendants.

16. Defendants allege that they do not manufacture, use or sell typewriting machines embodying the alleged inventions of the Reissue Letters Patent in suit, but on the contrary, manufacture, use and sell typewriting machines invented, developed, designed and patented by their own inventors, engineers and assignors.

17. Defendants allege that the typewriting ma-
13 chines manufactured, used and sold by them are more nearly like the typewriting machines disclosed in

their own patents applied for prior to Joerissen's alleged invention than they are to the construction of the patent in suit, and, therefore, if any claims of said Joerissen patent should be construed to read upon defendant's typewriting machines, such claims are invalidated by said defendants' patents.

18. Defendants allege upon information and belief that plaintiff surreptitiously and unjustly obtained said patent No. 1,846,339 and Reissue Patent No. 19,076 for that which was in fact invented by others, who were using reasonable diligence in adopting and perfecting the same.

19. Defendants allege that plaintiff is estopped by latches from now asserting any alleged right of action under the patent in suit.

WHEREFORE, defendants deny that plaintiff is entitled to the relief, or any part thereof, in said bill of complaint demanded, or to any relief whatsoever, and pray that the bill of complaint herein, and this action, be dismissed in favor of defendants.

REMINGTON RAND INC.
A Corporation of Maryland

By J A W SIMSON
Secretary

REMINGTON RAND INC.
A Corporation of Delaware

By J A W SIMSON
Secretary

EDWIN T. BEAN
Attorney for Defendants

14 STATE OF NEW YORK
County of Erie ss

J. A. W. Simson being duly sworn, deposes and says that he is an officer, to wit: Secretary of Remington Rand Inc., a corporation of Maryland, one of the defendants named in the foregoing answer; that he has read said answer and knows the contents thereof and that the same is true to his own knowledge except as to the matters therein stated to be alleged on information and belief, and as to those matters, he believes it to be true; that the reason for his veri-

fication of this answer is that the defendant is a corporation and that he is an officer thereof as above stated, and is familiar with its records and business, and has been advised by counsel with respect to the art with which the patent in suit relates; that the sources of his information and the grounds for his belief are his knowledge of said records and business and the advice of his counsel.

J A W SIMSON

Subscribed and sworn to before me this 15th day of November, 1934.

LYDA L. BARNER
Notary Public in and for County of Erie, N. Y.

Commission Expires March 30, 1936
(Seal)

STATE OF NEW YORK
County of Erie ss

J. A. W. Simson being duly sworn, deposes and says that he is an officer, to wit: Secretary of Remington Rand Inc., a corporation of Delaware, one of the defendants named in the foregoing answer; that he has read said answer and knows the contents thereof and that the same is true to his own knowledge except as to the matters therein
15 stated to be alleged on information and belief, and as to those matters, he believes it to be true; that the reason for his verification of this answer is that the defendant is a corporation and that he is an officer thereof as above stated, and is familiar with its records and business, and has been advised by counsel with respect to the art with which the patent in suit relates; that the sources of his information and the grounds for his belief are his knowledge of said records and business and the advice of his counsel.

J A W SIMSON

Subscribed and sworn to before me this 15 day of November, 1934.

LYDA L. BARNER
Notary Public in and for County of Erie, N Y.

Commission Expires March 30, 1936

(Seal)

Service of a copy hereof admitted this 16th day of November, 1934.

ARLON V. CUSHMAN
Attorney for Plaintiff.

Plaintiff's Motion for Bill of Particulars

Filed December 7 1934

* * * * * * * *

Now comes the Plaintiff, Carl A. Joerissen, by his solicitors, and moves the Court, pursuant to Equity Rule 20, for an order requiring the Defendants to serve and file, within ten days from the entry of said order, a Bill
16 of Particulars and/or further and better statement of certain of the alleged defenses set forth in the answer of the Defendants herein, which shall set forth and specify, fully and particularly, the following matters:

I.

What patents referred to in Paragraph 14, sections (a), (b) and (c) of Defendants' answer will be offered in evidence at the trial of the cause to illustrate the prior art, and, of those so offered, on which Defendants will rely at such trial in support of the contention of invalidity of the patent in suit.

II.

The name of each person upon whom Defendants will rely at the tiral of this suit as having had prior knowledge of the invention of the patent in suit, or knowledge of use thereof, or knowledge of sale of embodiments thereof more than two years prior to the original application for the patent in suit as alleged in Paragraph 14 (d) of Defendants' answer, and with respect to each such person:

(a). The date upon which each prior machine, structure or device was conceived, disclosed and first reduced to practice.

(b). The date or dates upon which sketches, drawings or description (upon which Defendants will rely) were made illustrating or describing such alleged prior invention; and as to each such sketch, drawing or description, whether or

not it is now in existence, and if in existence, to furnish a copy thereof.

(c). The date and place of each disclosure (upon which Defendants will rely), together with the names of the persons to whom each such disclosure was made and whether each such disclosure was oral or in writing; and if
17 in writing, whether or not each such writing is now in existence; and if in existence, to furnish a copy thereof.

(d). The date or dates upon which any machine, structure or device (upon which Defendants will rely) was constructed embodying or adapted to operate in accordance with such alleged prior knowledge; and as to each such machine, structure or defice, whether or not it is now in existence; also where and to what extent it was operated and to what person or persons its construction and operation were known; and a complete description by words and drawing of each such machine, structure or device.

(e). If any of the machines, structures or devices evidencing prior knowledge of the invention covered by the patent in suit or of use or sale prior to the original application for the patent in suit, are in existence, state when and where they can be inspected by Plaintiff's counsel.

(f). If any of the machines, structures or devices referred to in the preceding section are not in existence or if Defendants do not know where the same can be inspected, then produce full or working drawings of the same.

(g). When and where and with whose knowledge any actual use and/or reduction to practice of such machines, structures or devices took place.

(h). When and where and with whose knowledge any alleged public use or sale of such machines, structures or devices took place.

III.

Wherein does the patent in suit fail to describe the invention thereof as required by law in such full, clear, and exact terms as to enable any person skilled in the art or science to which said patent appertains to make or
18 use the same, and wherein does it fail to point out and distinctly claim the parts or improvements claimed as patentee's invention as required by law, as alleged in Paragraph 14 (e) of the answer.

IV.

Wherein will each type action, as disclosed in the patent in suit, fail to operate and be incapable of operation in the manner stated in the patent as alleged in Paragraph 14 (f) of the answer.

V.

Wherein were the Reissue Letters Patent in suit improvidently granted and not granted in accordance with the Statute 4916 R. S. U. S. as alleged in Paragraph 14 (i).

VI.

Wherein did Plaintiff surreptitiously and unjustly obtain his patent 1,846,339 and Reissue Letters Patent 19,076, and what others as alleged in Paragraph 18 of the answer invented and used reasonable diligence in adopting and perfecting the type bar mechanism claimed in patent 1,846,339 and Reissue 19,076, and as to each of said others:

(a). When, where and with whose knowledge the alleged prior invention was made.

(b). The date upon which each prior machine, structure or device was conceived, disclosed and first reduced to practice by the alleged prior inventor thereof.

(c). The date or dates upon which sketches, drawings or description (upon which Defendants will rely) were made by, for, or at the direction of each such alleged prior inventor illustrating or describing such alleged prior invention; and as to each such sketch, drawing or description, whether or not it is now in existence; and if in existence, to furnish copy thereof.

(d). The date and place of each disclosure (upon
19 which Defendants will rely) of each such alleged prior invention to others by the alleged inventor, together with the names of the person or persons to whom each such disclosure was made and whether each such disclosure was oral or in writing, and if in writing, whether or not each such writing is now in existence; and if in existence to furnish a copy thereof.

(e). The date or dates upon which any machine, structure or device (upon which Defendants will rely) was constructed embodying or adapted to operate in accordance

with such alleged prior invention; and as to each such structure, device or article, whether or not it is now in existence; also where and to what extent it was operated and to what person or persons its construction and operation were known; and a complete description by words and drawing of such machine, structure or device.

(f). If any of the machines, structures or devices of the prior inventions are in existence, state where they can be inspected by Plaintiff's counsel.

(g). If any of the machines, structures or devices referred to in the preceding section are not in existence or if Defendants do not know where the same can be inspected, then produce full or working drawings of the same.

(h). Whether any of the machines, structures or devices referred to were actually used and/or reduced to practice.

(i). When and where and with whose knowledge any actual use and/or reduction to practice of such machines, structures or devices took place.

VII.

By what laches is Plaintiff estopped from now asserting any right of action under the patent in suit as alleged in Paragraph 19 of the answer.

Plaintiff further moves that if such Bill of Par-
20 ticulars and/or further and better statement of the matters specified are not filed within ten (10) days from the entry of the order hereon and copies served upon Plaintiff's attorneys within such time so much of Defendants' answer as refers to the alleged prior inventions, uses, knowledge, manufacture, etc., be stricken out and that the Defendants be debarred from taking any testimony relating thereto, or receiving any benefit therefrom.

Plaintiff further moves for such other and further relief as to the Court may seem just and proper in the premises.

Plaintiff offers to file a sealed statement of his date of invention.

ARLON V. CUSHMAN
Counsel and Solicitor for Plaintiff.

Of Counsel:
CHARLES A. DOUGLAS
GORHAM F FREER

December 7, 1934.

A copy of this paper has been served on Conrad Christel, Esq., attorney for Defendants, by leaving a copy of the same at his office, National Press Building, Washington, D. C.

ARLON V. CUSHMAN
Counsel for Plaintiff.

December 7, 1934

---

21 *Defendants' Motion for Interrogatories*

Filed January 3- 1935

* * * * * * * *

Now, this day, come the Defendants and move the Court that they be granted leave, under Equity Rule No. 58, to file the interrogatories herein, which are herewith exhibited to the Court, said interrogatories to be answered by Plaintiff. The reason for propounding said interrogatories to Plaintiff is that the facts thereby sought to be elicited are peculiarly within the knowledge of Plaintiff, and that said facts called for are material to Defendants' case.

1. Upon what claims of the patent in suit will plaintiff rely as infringed by defendants?

2. When did plaintiff first have knowledge of a typewriting machine, made, used or sold by either defendant, of the kind that plaintiff regards as infringing the patent in suit?

3. When did plaintiff, or his patent attorney, first inspect a typewriting machine, made, used or sold by either defendant, of the kind that plaintiff regards as infringing the patent in suit?

4. If plaintiff can do so, please identify the typewriting machine referred to above (in interrogatory No. 3) by serial number, model, or otherwise in such manner that defendants can ascertain the model and probable date of production of such machine?

5. State the dates plaintiff will rely upon for
22 (a) conception, (b) disclosure to others, and (c) reduction to practice the alleged invention described and claimed in the patent in suit?

6. Has plaintiff, or any one for him, ever made a typewriting machine embodying either of the key actions described and illustrated in the patent in suit?

7. If the answer to the foregoing interrogatory (No. 6) should be in the affirmative, state where such machine may be inspected by defendants counsel?

8. Has plaintiff, or any one for him, ever made or obtained any device which plaintiff relies upon or will rely upon as demonstrating operativeness of the type actions described and illustrated in the patent in suit?

9. If the answer to the foregoing (No. 8) is in the affrimative, (a) state where such device may be inspected by defendants counsel, and (b) furnish a dimensioned or scale drawing, or copy thereof, of such device.

CONRAD CHRISTEL
Counsel for Defendants

A copy of this paper has been served on Arlon V. Cushman, Esq., the Attorney for Plaintiff, by leaving a copy of the same at his office, American Security Building, Washington, D. C.

CONRAD CHRISTEL—
Solicitor for Defendants

Jan. 2, 1935

---

23 *Plaintiff's Answers to Defendant's Interrogatories.*

Filed February 1 1935

* * * * * * * *

Now comes Plaintiff and answers the interrogatories propounded by Defendant.

To the interrogatories numbered as follows, the answers are:—

To No. 1, Claims 23 to 28, inclusive, so far as Plaintiff is now advised. Plaintiff, however, reserves the right, at any time prior to trial, and upon proper notice to Defendant, to specify other claims.

To No. 2, August or September, 1931.

To No. 3, April 27, 1932.

To No. 4, Serial No. H-12562-P. Remington Noiseless Portable.

To No. 5, (a) Conception of invention—July or August, 1921.

(b) Disclosure to others—In or about November, 1925.

(c) Reduction to Practice—In or about November, 1928.

To No. 6, Plaintiff has made a key-action embody-
24 ing what is described and illustrated in the patent in suit, and has made a complete typewriting machine, the mechanism of which is within the scope of the claims of the patent in suit and embodies the mechanical equivalents of the key-action shown and described in the patent in suit, i. e. that species of key-action described and illustrated in his patent No. 1,753,890, issued April 8, 1930, on an application filed subsequent to the filing date of the patent in suit.

To No. 7, The Key-action and complete machine may be inspected by Defendant's counsel at the office of Plaintiff's counsel (Messrs. Cushman, Darby & Cushman) 712 American Security Building, Washington, D. C.

To No. 8, Plaintiff has made a key-action demonstrating the operativeness of the key-actions described and illustrated in the patent in suit, and other key-actions of different species but embodying the invention of the patent in suit, and demonstrating the mechanical principles and mode of operation set forth in the patent in suit and coming under the claims thereof.

To No. 9, (a) The devices specified in Answer 8 may be inspected by Defendant's counsel at the office of Plaintiff's counsel, 712 American Security Building, Washington, D. C. (b) Defendant's counsel may take such drawings of such devices as desired.

CARL A. JOERISSEN
Plaintiff.

Carl A. Joerissen, Plaintiff herein, being duly sworn, deposes and says that the above answers to Defendant's interrogatories are true to the best of his knowledge, information, and belief.

CARL A. JOERISSEN

25 DISTRICT OF COLUMBIA) *ss:*

Subscribed and sworn to before me, a Notary Public, this 1st day of February, 1935.

THERESA BUCKHANTZ
(Seal) *Notary Public, D. C.*

RAND
DALTON
REMINGTON
BAKER-VAWTER
LIBRARY-BUREAU

Remington Rand Inc.
465 WASHINGTON STREET BUFFALO, NEW YORK

KALAMAZOO
SAFE-CABINET
REMINGTON-NOISELESS

DATE OF ORDER: 2-5-34

CHARGE TO: John W. Malley
2116 Kalorama Rd N.W.
Washington D.C.

SHIP TO:

DATE DELIVERED FROM S.O. STOCK: 2-5-34

QUANTITY	CLASS	MODEL OR CATALOG NUMBER	ARTICLE	PRICE	PER	AMOUNT
1			Noiseless Portable Elite Type			64.50
			Number N 43305			

CUSTOMER'S COPY
THIS IS NOT AN INVOICE

Paid in full 2-5-34
Remington Rand Inc.
by R. Everett

THE CONDITIONS PRINTED ON THE REVERSE SIDE CONSTITUTE A PART OF THIS CONTRACT

TERMS:

CUSTOMER'S NAME: John W. Malley

SIGNED BY: TITLE:

FILED
DEC. 7 1934
FRANK E. CHURCHILL

RAND
DALTON
REMINGTON
BAKER-VAWTER
LIBRARY-BUREAU

Remington Rand Inc.
465 WASHINGTON STREET BUFFALO, NEW YORK

KARDEX
POWERS
KALAMAZOO
SAFE-CABINET
REMINGTON-NOISELESS

DATE OF ORDER	CUSTOMER'S P.O. NO.	SHIP. PT. NO.	SALES OFF. NO.	ORDER NUMBER	CUSTOMER'S NO.	L.M. CONTRACT NO.	INT. SHIP. NO.
2/9/34		250	250				250

CHARGE TO: George W. Porter
1909 R. St. N. W.
Washington, D. C.

SHIP TO: Same

DATE DELIVERED FROM S.O. STOCK: I.R. Mason #11

QUANTITY	CLASS	MODEL OR CATALOG NUMBER	ARTICLE	PRICE	PER	AMOUNT
1			Remington Noiseless Portable # N 37852			$64.50

CUSTOMER'S COPY
THIS IS NOT AN INVOICE

By cash 64.50
Remington Rand Inc.
by I.R. Mason

THE CONDITIONS PRINTED ON THE REVERSE SIDE CONSTITUTE A PART OF THIS CONTRACT

TERMS: Cash

Plaintiff's Motion for Interrogatories

Filed December 7 1934

* * * * * * * *

Now, this day, comes the Plaintiff and moves the Court that it be granted leave, under Equity Rule No. 58, to file the interrogatories herein, which are herewith exhibited to the Court, said interrogatories to be answered by an officer of the Defendant Corporation. The reason for propounding the said interrogatories to said Defendant is that the facts thereby sought to be elicited are peculiarly within the knowledge of Defendants' officers, and that said facts called for are material to Plaintiff's case.

1. Do defendants make and/or sell or cause to be made and/or sold a typewriter known as the "Remington Noiselsss Portable", as exemplified by two machines purchased of Remington Rand, Inc., Washington agency, located at 1106 G. Street N. W., in the City of Washington, District of Columbia, and identified as "Noiseless Portable Elite Type" and "Remington Noiselsss Portable" and by dates of sale and by the respective serial numbers N43305 and N39852 in bills of sale of said Washington, District of Columbia, agency of Remington Rand, Inc., photostatic copies of which bills of sale are attached to this motion, and if the answer is Yes,

(a) which of Defendants' patents, if any, disclose the type bar actuating mechanism of the said "Remington Noiseless Portable" machine, and

(b) have Defendants ever manufactured a machine other than said "Remington Noiseless Portable" having
26 the type bar actuating mechanism of the said "Remington Noiseless Portable" machine.

ARLON V. CUSHMAN
Counsel and Solicitor for Plaintiff

CHARLES A. DOUGLAS
GORHAM F. FREER
Of Counsel.

December 7, 1934.

(Here follows photostat marked page 27)

A copy of this paper has been served on Conrad
28 Christel, Esq., attorney for Defendants, by leaving a copy of the same at his office, National Press Building, Washington, D. C.

ARLON V. CUSHMAN
Counsel for Plaintiff.

December 7, 1934

Defendants' Answers to Interrogatories Propounded by Plaintiff

Filed February 1 1935

* * * * * * * *

Now come defendants, by their duly authorized secretary, John A. W. Simson, and submit the following answers to interrogatories submitted in "Plaintiff's Motion for Interrogatories."

1. In answer to interrogatory No. 1, defendants say yes.

(a) In answer to interrogatory (a) defendants answer that Going patents Nos. 1,470,152 and 1,470,153 disclose and contain claims covering the kind of type bar actuating mechanism employed in the "Remington Noiseless Portable" typewriting machine referred to. A later Going patent, No. 1,908,140 discloses the same kind of type bar actuating mechanism and also discloses and claims differences in details from patents Nos. 1,470,152 and 1,470,153, these details being incorporated in said "Remington Noiseless Portable" machine and while improving the machine to not alter the type action in the fundamental respects described and claimed in said earlier Going patents.

(b) In answer to interrogatory (b) defendants answer that they have made and/or sold many machines identical with the two referred to in plaintiff's interrogatory
29 No. 1, and further, that their predecessor, The Noiseless Typewriter Company, Inc., made and sold many machines like the structure shown in Going patent No. 1,470,153, also covered by the claims in Going patent No. 1,470,152, and hence the same in fundamentals as said "Remington Noiseless Portable" machine.

JOHN A W SIMSON
Secretary of Remington Rand, Inc., a corporation of Maryland, and of Remington Rand, Inc. a corporation of Delaware.

STATE OF NEW YORK
County of New York ss

John A. W. Simson, being duly sworn, deposes and says that he is Secretary of Remington Rand, Inc., a corporation of Maryland, and of Remington Rand, Inc., a corporation of Delaware, and that he has made the foregoing answers and verily believes them to be true according to his best information and belief.

JOHN A W SIMSON

Sworn and subscribed to before me this 30 day of January, 1935.

D. M. HOSIE
Notary Public (Seal)
New York County Clerks No. 280
New York County Register No. 6-H-129

Commission expires March 30, 1936

---

30 *Defendants' Bill of Particulars*

Filed February 1 1935

* * * * * * * * *

Now come Defendants and particularize their Answer to the Bill of Complaint in the respects requested in "Plaintiff's Motion for Bill of Particulars", as follows:

I.

It is Defendants' present intention to offer in evidence at the trial, to illustrate the prior art, all of the patents listed in Paragraph 14, Sections (a), (b) and (c) of Defendants' answer. Of these patents, Defendants, as at present advised, intend to rely at trial on the following patents in support of their defense of invalidity of the patent in suit:

Going	1,471,152
Going	1,471,153
Anderson	1,312,820
Anderson	1,312,821
Going	1,561,450

II.

The names of the persons upon whom Defendants will rely at trial as having had prior knowledge of the invention of the patent in suit, or knowledge of use thereof, or knowledge of sale of embodiments thereof more than two years prior to the original application for the patent in suit, as alleged in Paragraph 14 (d) of Defendants' answer are:

(1) As to all prior art patents referred to which issued prior to March 22, 1924, the patentees and their assignees, their names appearing on the faces of the patent instruments, are the persons relied upon as having such knowledge, and the filing dates of the applications for said patents are relied upon as dates of constructive reduction to practice of the machines disclosed in said patents.

(2) As to all prior art patents referred to which
31 issued subsequent to March 22nd, 1924, the patentees and their assignees, their names appearing on the faces of the patent instruments, are the persons relied upon as having such knowledge, and, as at present advised, Defendants intend to rely upon the filing dates of the applications for such patents as the dates of conception and constructive reduction to practice of the machines disclosed in said patents.

(3) As to the defendants' predecessors in business and their employees and officers, The Noiseless Typewriter Company, Inc., a Delaware corporation, which had its general sales offices at No. 235 Broadway, New York City, is the predecessor of Defendants referred to. That company manufactured and marketed a noiseless portable typewriting machine during a period commencing more than two years before the original filing date of the patent in suit. The employees and officers referred to are listed in the following paragraph (h).

(a) The machine referred to was completed and successfully operated in or before June, 1921, and between that date and July, 1924, was manufactured and sold by said predecessor company in large quantities.

(b, c, d, e, f, and g) Defendants intend to produce at the trial one of said machines, which is now in the custody of Defendants' attorneys of record at their offices at 1608 Liberty Bank Building, Buffalo, New York, where it may

be inspected by Plaintiffs counsel on any business day upon reasonable notice. Although the actual machine will be relied upon primarily, it is pointed out for the information of Plaintiff that such machine is disclosed in the De-
32 cember, 1921 and April, 1922 issues of "Whispers", a house organ published by The Noiseless Typewriter Company Inc., and of which photostat copies of the pertinent pages are annexed hereto.

(h) Some of the persons who had knowledge of the public use, sale, and reduction to practice of said machine in 1921 and the place of such knowledge were:

G. K. Howland at Middletown, Connecticut (the location of the manufacturing plant of the Noiseless Typewriter Company Inc.)

R. E. Benner at Middletown, Connecticut.

Andrew W. Austin at Middletown, Connecticut

Raymond F. Byrne at Middletown, Connecticut

Arthur Cox at Middletown, Connecticut

Walter Bauer at Middletown, Connecticut

Clifford Bailey at Middletown, Connecticut

George G. Going at Middletown, Connecticut

Joseph Merriam at Middletown, Connecticut

Federick W. Schremp of Middletown, Connecticut

Henry J. Fuller at 40 Wall Street, New York City

Robert Moore at 40 Wall Street, New York City

Ellery Post at Middletown, Connecticut

Stanley Winnier at Middletown, Connecticut

Thomas Burke at Middletown, Connecticut

James V. De Toro at Middletown, Connecticut

Other persons throughout the United States and Canada had knowledge and use of the machine, over five thousand of which were made and sold before the end of the year 1924.

III.

As to wherein the patent in suit fails to describe the alleged invention in such full, clear and exact terms as to enable any person skilled in the art to make or use
33 the same, Defendants have not concerned themselves with seeking out an explanation of the precise point or points wherein the disclosure fails, but they base their allegation upon the fact that at the commencement of this

suit they instructed their skilled mechanics to make an operative sample of type bar action according to the patent in suit, for the purposes of this litigation, that although said mechanics had the benefit of any and all teachings contained in said patent and worked diligently in an attempt to produce such a type bar action they were unable to make one that would operate.

IV.

As to wherein such type action, as disclosed in the patents in suit, will fail to operate and be incapable of operation in the manner stated in the patent, as set forth in Paragraph 14 (f) of the answer, Defendants have not concerned themselves with seeking out an explanation of the precise reason or reasons why the type action of the patent in suit is inoperative, but they base their allegation upon the fact that a type bar action, made by their skilled mechanics in accordance with the patent disclosure is inoperative and will not operate in the manner stated in the patent.

V.

As to wherein the Reissue patent in suit was improvidently granted and not granted in accordance with Statute 4916 R. S. U. S. as alleged in Paragraph 14 (i) of the answer, Defendants say that although the original patent No. 1,846,339 was invalid and inoperative by reason of a defective and insufficient specification and by reason of the patentee claiming as his own invention more than he had a right to claim as new, that the Reissue patent is invalid and inoperative in the same respects as the original patent; that the only changes in the Reissue over the original
34 patent are immaterial and inconsequential changes in terminology which do not affect, change or remove the defectiveness and insufficiency of the specification or change the meaning or substance or breadth of the claims; and, accordingly, that said changes are not of the kind contemplated by said statute; that no reason contemplated by the statute was assigned in the application for Reissue or the accompanying oath and, for that reason, the Reissue patent is invalid, inoperative, and of no force and effect.

VI.

As to wherein Plaintiff surreptitiously and unjustly obtained patent 1,846,339 and Reissue 19,076, and as to the other persons who invented and used diligence in adopting and perfecting the type bar mechanism referred to, Defendants say that George G. Going invented and, with other employees and officers of Defendants and their predecessors, adopted and perfected such mechanism, in the form substantially as shown in Going patent 1,471,152 and as practically embodied in the machine referred to in preceding paragraphs (3) and (a) to (h) inclusive; that insofar as the claims of said patent 1,846,339 or Reissue 19,076 might be considered to read upon the Remington Noiseless Portable Machine they read upon said invention of said Going; and, accordingly, that with the construction apparently placed upon said claims by Plaintiff by his charge that they are infringed by said Remington Noiseless Portable Machine, such claims were unjustly and surreptitiously obtained by Plaintiff for an invention which was made by said Going.

The dates, places and other matters inquired into in sections (a) to (i) inclusive, paragraph VI of Plaintiff's Motion for Bill of Particulars, are set forth in paragraph II hereof.

VII.

As to what laches estops Plaintiff from now asserting any right of action under the patents in suit, as al-
35 leged in Paragraph 19 of the answer, Defendants say that their predecessor, The Noiseless Typewriter Company Inc., manufactured and sold throughout the United States and Canada, thousands of typewriting machines similar to the ones now charged to infringe, during the period from 1921 to 1924, and that from early in 1931 until the present time Defendants have been making and/or selling in large quantities the machines now charged to infringe; that Plaintiff has had knowledge of these activities of Defendants and their predecessors; and yet that Plaintiff failed and did not during the period from 1921 until April 28, 1932 when formal notice alleging infringement was mailed, ever allege or assert that such activities constituted any violation of any patent monopoly to him belong-

ing, nor did Plaintiff, for nearly two years after such notice, or until on or about March 15, 1934, take any steps to enjoin said activities.

REMINGTON RAND INC.,
a corporation of Maryland
REMINGTON RAND INC.,
a corporation of Delaware
By JOHN A W SIMSON
Their Secretary

STATE OF NEW YORK,
County of New York, ss:

John A. W. Simson, being duly sworn, deposes and says that he is Secretary of Remington Rand Inc., a corporation of Maryland, and of Remington Rand Inc., a corporation of Delaware, and that he has read the foregoing "Defendants' Bill of Particulars" and verily believes the statements contained therein are true according to his best information and belief.

JOHN A W SIMSON

36 Sworn to and subscribed to before me this 30 day of January 1935.

D. M. HOSIE
(Seal) *Notary Public*
New York County Clerks No. 280
New York County Register No. 6-H-129
Commission expires March 30, 1936

EDWIN T. BEAN
Counsel for Defendants

(Here follow photostats marked pages 37, 38, 39, 40, 41, and 42)

43 *Opinion of Court*

Filed April 27 1936

* * * * * * * * *

The operation of the two typewriters are, it seems to me, so entirely different in principle that there is no infringement. The plaintiff claims that his "contribution to the art was the provision of a mechanism in which the operative parts, type bar, toggle, swingable link portion, and key bar, were so assembled and correlated that the swing-

WHISPERS

from The NOISELESS *Typewriter*

Vol. 1 DECEMBER, 1921 No. 3

A Landmark

THE attention of our readers is called very particularly to pages eight and nine of the present number of "*Whispers*". On these two pages will be found a kind of evidence which never fails to carry weight—the evidence which is represented not by words and by claims, but by significant, unescapable facts. In advertisements and through the statements of our sales force we have proclaimed that The Noiseless Typewriter is the last and best word in writing machines. We have made statements, we have advanced arguments, we have grown eloquent and sometimes rather breathless in preaching the gospel of the quiet office and of the machine that makes the office quiet.

When you reach these two pages, in the course of the careful persual which we bespeak, you will find that they contain no rhetoric and no formal argument. They are filled with two lists and that is all. But when you come to scrutinize these lists you will find that they are made up of names that cannot fail to arrest attention. In them will be found the justification of the long effort which has led up to the perfecting of The Noiseless Typewriter, and in them also will be found a large part of the reward that has come to those who believed that it was a useful service to remove from business offices the clatter of the machine shop. For these two lists—the one of notable institutions and the other of notable individuals—prove beyond all possibility of doubt or contradiction that The Noiseless is being welcomed and adopted by institutions of national and international greatness, as well as by many whose names are known to millions as leaders of finance and business.

It is an old and trite proverb, but "the proof of the pudding is in the eating." If you come back for more you are pleased, and if you come back often you are greatly pleased. The first of these lists is made up of institutions and companies numbering one hundred, who have purchased more than ten thousand Noiseless Typewriters, or an average of above one hundred each. We have always maintained that while The Noiseless is invaluable to executive officers who need to have their secretaries close at hand, it wins its most signal triumph in the large, open office. No one who has ever heard twenty-five or fifty hammer-blow typewriters at work in a single room is likely to forget the nature of the din they make, and those who seek to work amid such a din cannot fail to realize how it reduces their power to concentrate. The Noiseless Typewriter is not for the President's use only. It exists for the benefit of the whole office, and to read the first of these two lists is to gain an indelible impression regarding the progress which The Noiseless is making among the great institutions. In all cases, the original attitude was one of hope mingled with scepticism. Thus in almost every case the original purchase was one of a single machine, and the first twenty machines often represent a dozen or more transactions. But steady "repeat orders" tell the story, and it is only by a great many "repeat orders" that such an aggregate as that given is made up.

With regard to the list of celebrated executives who are cited as users, the only comment which need be made is that The Noiseless begins automatically at the top.

I have entitled this word of preface, "A Landmark," and in the annals of our enterprise each of these lists is indeed a landmark. By the time a typewriter company can show such lists as these, it may be said to have survived with some credit its baptism of fire. We hope that the information therein given may prove as gratifying to our friends outside the organization as it is to those in our own ranks who have worked so hard and so loyally to achieve this result.

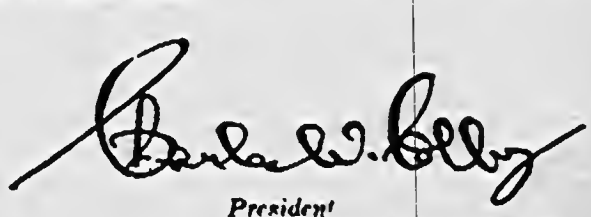

President
The Noiseless Typewriter Co

Short History of The Noiseless Typewriter — (*Continued*)

although a group of intelligent men stood behind it loyally and raised large sums of money in the hope of overcoming the difficulties which were encountered. From the first to last the cam noiseless typewriter illustrates the force of Browning's phrase:

> "The little more and how much it is:
> And the little less and what worlds away!"

The cam machine was ninety or ninety-five per cent. right, but what it lacked was enough to involve failure.

However, out of all the toil and trouble which marked the efforts of the first Noiseless Typewriter Company, there came one solid result. In 1912, Mr. N. H. Anderson, one of the Company's engineers, invented a type action which rendered it possible to eliminate cams wholly from the machine, at the same time accelerating the speed very greatly and lightening the touch to a marked degree. This invention, which centres in double toggle, or momentum accumulator, action at once cured the difficulties which had been caused by the cams. During the course of 1912 enough of these new machines were produced to make it clear that the double toggle structure did indeed provide a remedy for the troubles before encountered. The next step was to bring this new machine to the market.

By this time the first Noiseless Typewriter Company had come to the end of its financial resources, and during 1913, a Receiver was appointed. At the same time a Bondholders' committee was appointed to co-operate with the Receiver in working out a plan of reorganization. During the Spring of 1914 fresh capital was raised by the Directors of the first Noiseless Typewriter Company, by far the greater part of this being provided by the shareholders of that Company. In other words, this reorganization did not represent a sale of assets to strangers but rather a fresh subscription of funds by those who had for years been associated with the enterprise. This is illustrated by the fact that immediately after the reorganization of 1914 more than ninety per cent. of the stock of the new Company was held by shareholders of the old company. Thus a real, organic unity was preserved. Believing that the new type action would solve the difficulties presented by the cam structure, those who had faith in the enterprise subscribed or raised fresh funds and went forward.

The President of the first Noiseless Typewriter Company was W. Caryl Ely, who worked with the utmost devotion and determination to overcome inherently insuperable obstacles, and who occupies a foremost place in the annals of The Noiseless Typewriter. The first President of the present Noiseless Typewriter Company was Joseph Merriam, of Middletown, Connecticut, who had been one of the most active, useful members of the first company, and whose assistance at the moment of reorganization had proved most valuable. J. A. Ruffin was made Works Manager, and E. J. Sheehan, Sales Manager.

During the nine months from June, 1914 to March, 1915, tools for the new machine were in process of construction, and during the remaining nine months of 1915, the new product was being tested out carefully in small quantities. In fact, less than five hundred machines were sold during 1915. In 1916 a considerably larger product was marketed but no real effort was made to crowd sales, it being the policy of the Board to make sure that the machine was right before trying to sell it in a large way. As a result of the experience gained during 1915 and 1916, a new model was brought out at the beginning of 1917—the No. 4 model which represents The Noiseless Typewriter in its first fully commercial and satisfactory form. This machine, which is based upon double toggle action as refined and developed by the experimental department during 1915 and 1916, has brought The Noiseless Typewriter Company to the point which it has now reached. Much credit for improvement in design during the period of the present company is due to G. G. Going, the Chief Engineer. Of late Mr. Going's attention has been largely occupied with the development of the Portable Noiseless, of which a description will be found in another part of the present number.

During the four years 1917-1920, the sales of The Noiseless Typewriter increased not only steadily, but with a rapidity unequalled by any other typewriter during the corresponding period of its development—that is to say during the first four years from the time when the machine was brought to the point where it could be said to be a fully commercial product. At the present time The Noiseless Typewriter enjoys a status and possesses prospects which are known to all readers of "*Whispers*." For some time past the President of The Company has been Dr. C. W. Colby, and in August last the organization was greatly strengthened by the addition of A. F. Hebard as Vice-President.

nounced good, and in 1889 some sheets were sold to London.

The planters in Ceylon did not take hold of rubber planting with the same eagerness as did the planters of Malaya. In Ceylon they were making good profits in tea growing, and had no need to make a change. But in Malaya the planters and the financial interests in Europe who had sent them were sick of the struggle to make a living out of coffee, and, though in fear and trembling, began to plant this new thing, rubber, hoping if possible, to save their estates from abandonment.

American interests were attracted to the plantation in 1910 when the British and other Europeans had invested between three and four hundred million dollars in estates. The United States Rubber Company, the largest consumer of crude rubber in the world, was one of the first of the American concerns to investigate the possibilities and enter the field. The Dutch Island of Sumatra was chosen for the Company's activities. This American Corporation has established there the largest single rubber plantation in existence — a tract which contains more than seventy square miles of trees in a high state of cultivation. Close to twenty thousand employees are at work in this great orchard. The high standards of administration and scientific culture which have marked this project have implanted in the minds of the dwellers in that far eastern clime, a thoroughgoing respect for American efficiency.

Your soft-spoken little friend

The NOISELESS PORTABLE

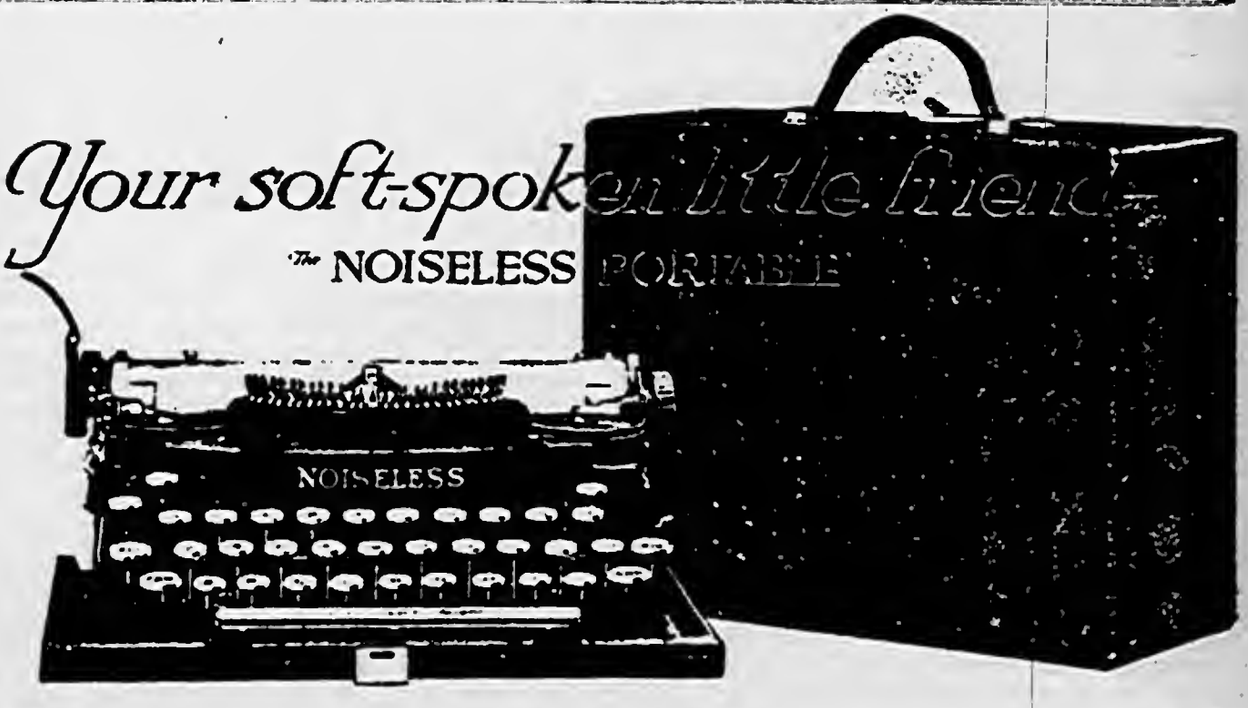

IF you were asked the main reason against using a typewriter in your home, wouldn't you say, "Noise?" You don't want to disturb the restful quiet of the home with the eternal click-clicking that frays and tears the nerves and annoys the family. The Noiseless Portable brings you quiet that will not waken a sleeping baby. No matter how fast you write, there is only a soothing whisper. And more—The Noiseless Portable brings you ease and speed in operation, with beautiful work, as unusual in its quality as the machine itself.

Your nerves are never shocked by hammering of the keys—nor is your thought even interrupted by the forwardness of noise. It writes with just the lightest, most gentle touch—fast enough for the fastest operator, yet equally responsive to the hesitating touch of the beginner.

In the home, work may be done without disturbing the other folks who wish to enjoy the evening quietly.

Reporters and writers, who often carry their machines with them, find this little soft-spoken friend almost indispensable. Clergymen, teachers, students, store and shopkeepers are pleased with the personal privacy of The Noiseless Portable.

The Noiseless Portable weighs only six and one half pounds without the case—eight pounds in the case. The case is 4¾ inches high by 9¼ inches by 11¼ inches. It is one of the most convenient, compact typewriters ever built and we are proud to place our name on it.

WHISPERS

from The NOISELESS *Typewriter*

Vol. 1 APRIL, 1922 No. 4

The Noiseless Portable

THE feature of the present number is The Noiseless Portable.

Work on this model was begun exactly four years ago, namely in March, 1918. At this date we had a fundamental idea, but nothing else. The fundamental idea was represented in metal simply by one type action put together for the purpose of illustration and so mounted as to make clear the operation of the proposed structure.

The arresting feature of this new type-bar was that it did not slide along a plate after the manner of the typebar used in our large machine. It was pivoted, and functioned through a swinging action. At the same time it was grounded upon the momentum accumulator principle, which not only makes the large Noiseless Typewriter quiet, but gives it high speed and great lightness of touch.

With this for a point of departure, our Factory has kept working on the Portable for four years with unflagging effort. This is not the place in which to outline the stages through which a typewriter must go in emerging from a mechanical conception and becoming a commercial product manufactured in commercial quantities. Those who have had experience in this field of industry will be the first to recognize that four years is a period of moderate length for such a development.

The Noiseless Portable is now ready for the market and The Noiseless Typewriter Company is ready to book orders. In selling a Portable Typewriter it is not only necessary that the machine should do excellent work at the moment when it has passed inspection at the Factory. Provision must be made for a kind of packing which will take it through the mail or by express to the ends of the earth. When delivered at Dawson City or Timbuctoo, it must be able to write a good looking letter the moment it is taken from the box—thus cutting out all need for local inspection prior to delivery to the user.

Bearing all these things in mind, it may still be reiterated that The Noiseless Portable is now ready for the market and there can be no doubt that the market is ready for it.

The advent of The Noiseless Portable suggests a message to our own circle of friends and to the public. It also suggests a message to the members of our own organization. To our friends and to the public we should like to point out that The Noiseless Portable means a broadening of our business. It is recognized by everyone that the typewriter field has been enormously and permanently enlarged by the Portable model, as opposed to the heavy office machine. In the course of time every one of the leading typewriter companies is certain to market a Portable of some kind. The action of The Noiseless Typewriter Company in entering this field will be rightly interpreted by those who see in it a determination to advance with the times.

To those of our own organization we may point out that by the exercise of rare mechanical skill and by unremitting labor, the Factory has produced a Portable machine of which we may all be very proud and in which we can feel genuine confidence. It appeals quickly to the imagination and nothing is so easy to predict as that it will sell readily on demonstration—across the counter, so to speak.

The lists published in the last number of "Whispers" constitute one landmark. The coming of The Portable is another very impressive landmark in the expansion of our enterprise.

Charles W. Colby

President
The Noiseless Typewriter Co.

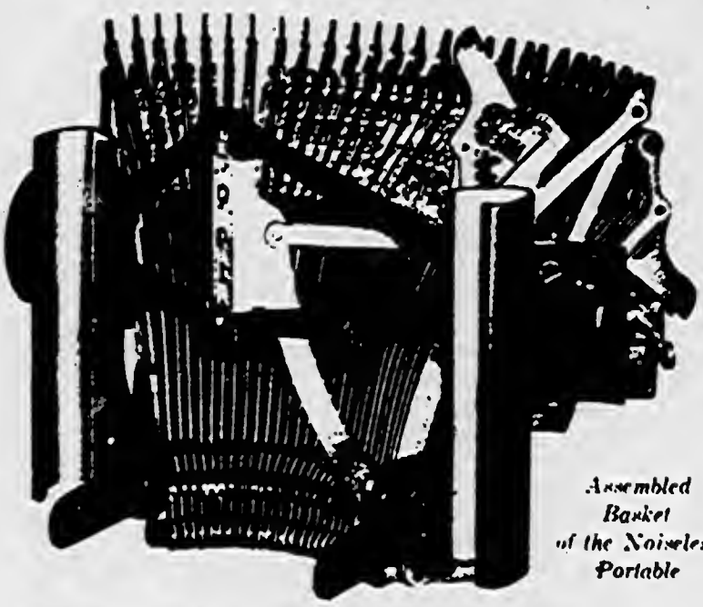

Assembled Basket of the Noiseless Portable

The HEART of The PORTABLE

By J. A. Ruffin

I VENTURE the statement that a very small percentage of typists, or possibly even those engaged in the manufacture and selling of typewriters, realize that the printing element generally known as the type action is the real distinguishing feature between the various kinds of writing machines in general use.

The type actions employed in the Noiseless typewriter are such radical departures from any of those used heretofore that I believe a brief description of our portable printing element will be of interest to the readers of *Whispers*. Before proceeding, however, may I not rapidly sketch the salient features of a few of the older actions? This will refresh the memory of those familiar with them, and enable us all to visualize more clearly the points of difference.

In most typewriters the key actions are quite similar, and the carriages much alike consisting of a platen, feed rolls, line space mechanisms, twirlers, etc., etc. (the metal platen of the Noiseless typewriters being a notable exception.) The escapements vary only in detail, the machines are equipped with back spacer, margin release, tabulator, etc., which are near enough alike to be first cousins but there is a marked and distinctive departure in the design of the type actions of various machines.

Some of us remember those most ingenious actions of the Williams and Yost machines which performed wonderful gyrations in their journey from normal to the printing point and for this reason were facetiously called the "grass-hopper movement." Again we have the type action employed in the flat platen machines such as the Elliott-Fischer. In this type of instrument it is impracticable to shift either the platen or the basket. Therefore the type is secured to a type head which is journaled into the type bar with means of oscillating it from lower case to capital or figure.

Then we have the Oliver style of action swinging from right to left and printing on top of the platen. There are also wheel and shuttle machines, the type wheel and shuttle performing the same function as the type action in the type bar machine, and finally the familiar hammer blow actions of the well-known machines of today which bring us to the Noiseless typewriter, the last word in writing machines. In this article we are not going to discuss our large machine, but will confine our remarks to "The Heart of the Portable."

While it is true that all moving parts operate much more quietly in our machine than others, the dominant *noiseless* feature resides in the type action. The accompanying figures show the assembled basket of the portable and inasmuch as this consists of the type actions, segment, vertical ball rails (upon which the basket is shifted to capital or figure position) universal bar, etc., etc., it is a self-contained unit, hence its title, the "Heart of the Portable."

The rear view shows the "Q" action at the moment of printing, while the others lie around the basket in their normal position. This is more clearly indicated by the photograph of the individual action, the shaded portion showing the action at the moment of printing and the light lines the normal position. Please note that from normal position to the printing point is 1½ inches and since the type has to travel from 4 to 6 inches in other machines to reach the printing point, it is obvious that the Noiseless is the fastest typewriter manufactured.

The operation of the Noiseless action is as follows: The key lever should be struck with a quick staccato finger blow to obtain the best results. It will respond to a very light touch and is preferably operated in this manner but regardless of the quality of the touch employed the result is the same. The key lever is depressed to a final stop, advancing the type to approximately ¼ of an inch of the platen, from which position the actual printing is accomplished through the momentum accumulator by breaking the double toggle, thus *pressing* the type to the paper. Since the only function of the key lever is to energize the momentum accumulator, the final stop referred to may be made of leather or rubber, thereby preventing noise when the key levers come in contact with it. As a matter of fact the key levers rarely reach the final stop when the instrument is properly operated. This is possible because the type action is not positively attached to the key lever but is connected by a pull link suitably slotted, permitting the action to continue its movement after the key has ceased to travel.

It is clear, therefore, that the key lever is not confined to close limits so that yielding or silent abutments can be used to advantage. In fact the only reason stops are used at all is to prevent straining the parts when the keys are struck with violence.

Each type action in the Noiseless machine has an individual adjustment to regulate the amount of pressure applied at the printing point, and is obtained by turning the adjusting screws in or out to suit the condition. One may easily observe these screws in the rear view of the illustration, "The Heart of the Portable." When this adjustment is properly made, the printing will be uniform regardless of the force with which the machine is operated.

Before closing I want to point out that the Noiseless type action contains more parts than those in other machines. These added parts, however, are only incidental to guiding the type bar to the printing point without noise, and they may be likened to the reins in guiding a horse. The speed with which one may reach a given point and the load a horse can draw are inherent in the animal itself and not in the reins. So with the Noiseless typewriter, the real printing function resides in the type and type bar only, as it does in other machines, and the means of presenting the type to the paper marks the outstanding difference between the Noiseless and noisy typewriters.

Space prevents going further into detail in this issue of *Whispers*. Nevertheless I believe that, with the aid of illustrations, what I have been able to say will give our readers a fair conception of "The Heart of the Portable."

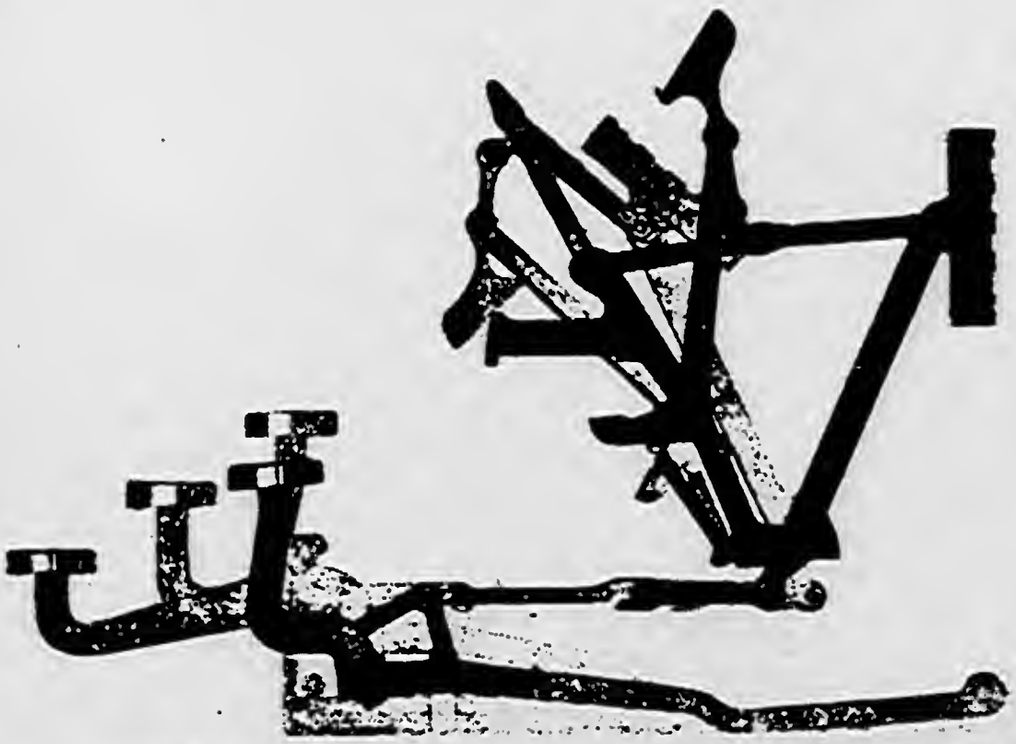

Drawing showing single type action of The Noiseless Portable. The heavy shading shows the action at the printing point. The light shading shows action resting in basket.

able link portion, to complete the stroke of the type bar, moves downwardly and rearwardly in an underswinging fashion from its normal position of rest." (Ptf. Brief, p. 10) In the defendant machine the stroke is completed by the force of a momentum accumulator, which although at the beginning of the operation has a rearward and slightly downward movement, is moving upwardly and rearwardly at the end of the movement, effecting the printing by a straightening of the toggle.

In the plaintiff's machine when the key lever is depressed the motion of the type bar is checked, and as shown by the motion pictures, actually brought to a stop, at a short distance before it reaches the platen; the toggle being at that time in a relatively straight position, the stroke is completed by a further depression of the key lever, which causes the swingable link portion to press the type against the platen. In the defendant's machine the depression of the key lever ceases before the contact of the type with the platen and the printing is completed by the force of the momentum accumulator straightening the toggle. The movement of the momentum accumulator is continuous as well as that of the type bar, although the latter slows down before printing, the impression upon the platen being caused by the straightening of the toggle. In the defendant's machine if the key lever is depressed slowly it comes to a stop before the type bar reaches the platen, and
44 the momentum accumulator has not acquired sufficient momentum to carry the type bar further; and no amount of pressure upon the key lever will cause any printing. In the plaintiff's machine, however, the motion of the key lever is continuous up to the time of printing, the actual printing being caused by the depression of the key bar to its fullest extent, and not as in the defendant's machine by the momentum acquired by the accumulator.

As I said at the outset the operation of the two machines is so different as well as the functions of the "swingable link portion", that I find that there has been no infringement.

The bill should be dismissed with costs.

JENNINGS BAILEY.
Justice.

Findings of Fact

Filed June 12 1936

* * * * * * * * *

The Court makes the following findings of fact and conclusions of law.

1. The plaintiff, Carl A. Joerissen, is a resident of Washington, District of Columbia; the defendants are Remington Rand, Inc., a Delaware corporation, and Remington Rand, Inc., a Maryland corporation, both having their principle places of business at Buffalo, New York; the suit is for alleged infringement of plaintiff's patent Re. 19,076; and the jurisdiction of this Court is admitted.

2. The patent in suit relates to a typewriter key and type bar action, and claims 23 to 28, inclusive, thereof are alleged to be infringed by defendants' typewriter, which is exemplified by the typewriter, plaintiff's exhibit 7,
45 and illustrated in defendants' Going patent No. 1,908,140, and one key action of which is exemplified by the plate model, defendants' exhibit E.

3. In plaintiff's patent, as is shown by slow motion pictures, defendants' exhibit I, of the plate model, plaintiff's exhibit 8, which exemplifies plaintiff's patent, the toggle 30, 31 (referring to Figures 5 and 6 of the patent in suit) assumes a relatively straightened position to "check" or stop the type bar a short distance in advance of the platen. The swingable link 12, 15 to which the forward toggle member 30 is pivoted, is swung downwardly and rearwardly by further manual depression of the key lever 1 to thrust the relatively straightened toggle toward the platen, thereby moving the type bar into printing relation with the platen.

4. In the operation of defendants' machine, as described in Going patent No. 1,908,140, and as shown by the slow motion pictures, defendants' exhibit J, initial depression of the key lever 34 (referring to Going patent No. 1,908,-140) starts the type bar 13 toward the platen and initiates movement of a momentum accumulator 80, which at first moves in a downward and rearward direction. Prior to the type bar reaching the platen, the key lever motion is stopped and the momentum accumulator 80 moving upwardly and rearwardly, acts through its integral part 90 which is also moving slightly upwardly, to complete

straightening of the toggle 70, 73 to press the type bar into printing relation with the platen.

5. In defendants' machine the movement of the type bar is continuous until it prints against the platen, gradually slowing as the platen is approached, and it is not stopped, as the type bar is in plaintiff's patent, a short distance in advance of the platen, so there is nothing in defendants' machine "to impart to the type bar a terminally checked throw to a position slightly in advance of striking
46 position", as described and claimed in plaintiff's patent.

6. Defendants' machine has no part for performing the function of the downwardly and rearwardly swinging link 12, 15 of plaintiff's patent, of thrusting a relatively straightened toggle toward the platen. The part 90 of the momentum accumulator of the Going patent No. 1,908,140 is not the functional or patentable equivalent of the part 12, 15, which is the link "swingable downwardly from its normal position of rest and rearwardly", described and claimed in plaintiff's patent.

7. The mode of operation of defendants' key and type action is entirely different from the mode of operation described in the specification and set forth in claims 23 to 28, inclusive, of the Joerissen patent in suit; and the claims do not read upon the defendants' structure.

Conclusions of Law

1. As the mode of operation of defendants' key and type bar action is entirely different from the mode of operation described and claimed in plaintiff's patent, there is no infringement of claims 23 to 28, inclusive, thereof by the defendants herein.

2. As there is no infringement, it is unnecessary for the Court to consider the several defenses of invalidity urged by defendants.

3. The bill of complaint herein should be dismissed with costs to defendants.

JENNINGS BAILEY—
Justice.

Receipt is hereby acknowledged this 8th day of June, 1936 of a copy of the foregoing defendants' proposed findings of fact and conclusions of law.

A. V. CUSHMAN,

T. A. HOSTETLER,
Solicitor for Defendants

EDWIN T. BEAN
Counsel for Defendants

RICHARD W. TREVERTON
Counsel for Defendants

47 The plaintiff excepts to the making and entering of the foregoing findings of facts numbers 3, 4, 5, 6, and 7, and each of them, and to all of the conclusions of law numbers 1, 2, and 3, and each of them, and said exceptions are duly noted and allowed.

JENNINGS BAILEY
Justice.

Final Decree

Filed June 12 1936

* * * * * * * * *

This cause, having been brought on for final hearing upon the pleadings and proofs and after considering briefs submitted on behalf of both parties, it is this 12th day of June, 1936, Found, Adjudged Ordered and Decreed:

1. That the patent in suit, being United States Letters Patent Re. 19,076, issued to Carl A. Joerissen on February 13, 1934, for "Typewriting Machine", is the property of the plaintiff.

2. That said patent, and particularly claims 23 to 28, inclusive, thereof, are not infringed by the typewriting machines manufactured, used, or sold by defendants.

3. That the bill be and the same hereby is dismissed with costs to defendants.

JENNINGS BAILEY
Justice.

Exception of the plaintiff is hereby noted to the entry of the above decree and to each and every part thereof and the plaintiff, by his attorneys, in open court, petitions for and notes an appeal from the above decree to the United States Court of Appeals for the District of Columbia, on this 12th day of June, 1936, which appeal is hereby allowed:

48

Whereupon the maximum undertaking for costs is hereby fixed at One Hundred Dollars ($100.00) with leave to deposit the sum of Fifty Dollars ($50.00) with the Clerk in lieu thereof.

JENNINGS BAILEY,
Justice.

Memoranda

JULY 1—1936.

$50 deposited in lieu of bond on appeal.

JULY 3—1936.

Time to file statement of Evidence extended from day to day to and including August 15, 1936.

---

49 *Assignments of Error.*

Filed August 15 1936

* * * * * * * * *

Now comes the Plaintiff in the above entitled case and files the following assignments of error upon which it will rely upon the prosecution of its appeal from the decree of the Supreme Court of the District of Columbia entered on the 12th day of June, 1936.

The Court erred:

1. In dismissing the Bill of Complaint for lack of infringement by Defendants of the Plaintiff's patent in suit, Re. 19,076.

2. In not granting the prayers of the Bill.

3. In holding that the modes of operation of the two typewriters, Plaintiff's and Defendants', are so entirely different in principle that there is no infringement.

4. In holding that the functions of the "swingable link portions" of the two machines are so different that there is no infringement.

50 5. In not giving consideration to the claims in suit and their scope, particularly as such scope was established by their course in the Patent Office.

6. In not finding that the claims in issue are of a scope to cover a type bar stroke completed by a momentum accumulator.

7. In not finding that the granting power, the Patent Office, established the claims in issue as covering an action in which the type bar stroke is completed by a momentum accumulator, by originally allowing the claims, in substantially their present form, in a co-pending application of Plaintiff, now patent No. 1,856,340, which discloses a momentum accumulator to complete the type bar stroke.

8. In giving any consideration to the direction of final movement of the link portion of Defendants' machine in view of the fact that the claims in issue contain no limitation in this respect, specifying only the direction of movement from normal rest position.

9. In giving any weight to the fact that in Defendants' machine the checked type bar stroke is completed by a momentum accumulator after the arrest of the key lever, whereas in Plaintiff's apparatus the checked type bar stroke is completed by the continued movement of the key lever.

10. In not finding that in Defendants' machine the type bar has an initial terminally checked throw in that the initial rapid movement imparted directly by the key lever is succeeded by a final decelerated movement imparted by the momentum accumulator.

51 11. In not finding that the essential elements of the claims of the patent in suit are present in Defendants' machine and therein contribute the same advantages as in Plaintiff's construction.

12. In not finding that Defendants' machine embodies the essential elements of the claims in suit and that the other recited elements of the claims, which provide the setting for the essential elements, are entitled to a broad range of equivalents.

13. In not finding that claims 23 to 28, inclusive, of the patent in suit read on Defendants' construction.

14. In not finding the claims in suit infringed.

WHEREFORE Plaintiff prays that the said decree may be reversed.

DOUGLAS, OBEAR, MORGAN & CAMPBELL
CUSHMAN, DARBY & CUSHMAN
By ARLON V. CUSHMAN
Attorneys for Plaintiff.

Service of copy of the foregoing acknowledged August 14, 1936.

T. A. HOSTETLER
Attorney for Defendant.

52 District Court of the United States for the District of Columbia

Saturday, August 15, 1936

The Court resumes its session pursuant to adjournment, Mr. Justice Bailey, presiding.

* * * * * * * * *

Come now the parties hereto by their respective attorneys of record, and thereupon, the plaintiff by his attorneys presents to the Court his Statement of Evidence taken at the trial of this cause, and prays that the same be signed and made of record, nunc pro tunc, which is hereby accordingly done.

---

53 *Stipulation*

Filed August 15 1936

* * * * * * * * *

It is hereby stipulated and agreed between the parties in the above entitled case, that the following Exhibits introduced in evidence on trial in the District Court of the United States for the District of Columbia, be, and hereby are, made a part of the Statement of Evidence to be attached thereto and transmitted to the Court of Appeals of the District of Columbia with the Transcript of Record on

Appeal, enlarged diagrams to be reduced to convenient size:

Plaintiff's Exhibits

1. Copy of Reissue Letters Patent No. 19,076, to Joerissen.

2. Copy of Patent No. 1,846,339, to Joerissen.

3. Certified copy of file wrapper contents Re.
54 19,076. Of this Exhibit, print only the Petition and the Oath in the Transcript of Record, it being stipulated and agreed that the only effect of the reissue proceedings was to effect the following changes in claims 24, 26, 27 and 28, of Joerissen original patent No. 1,856,339:

Claim 24, by inserting the word "and" after "position" in line 14 of the claim as it appears in patent 1,856,339 (line 12 of claim 24 as it appears in Reissue Patent 19,076).

Claim 26, by inserting the word "and" after "position" in line 14 of the claim as it appears in patent 1,856,339 (line 12 of claim 26 as it appears in Reissue Patent 19,076).

Claim 27, by inserting the word "and" after "position in line 14 of the claim as it appears in patent 1,856,339 (line 12 of claim 27 as it appears in Reissue Patent 19,076).

Claim 28, by inserting the word "and" after "position" in line 13 of the claim as it appears in patent 1,856,339 (line 12 of claim 28 as it appears in Reissue Patent 19,076).

4. Certified copy of file wrapper contents Patent No. 1,846,339.

Insert in the printed record a statement:

"The specification of the application as originally filed is not reproduced as it is the same as the specification of patent 1,846,339 except for the insertion added in paper No. 17 G which insertion also appears in the patent, page 2, line 125 to page 3, line 11."

Reproduce in the printed record only—

Original claims marked as in file wrapper prefaced by statement that they are the claims accompanying Joerissen application Serial No. 96,602 (resulting in patent No. 1,846,-339) filed March 22, 1926.

55

Paper No. 2	June 8, 1926
Paper No. 3 A	Dec. 13, 1926
Paper No. 4	Mar. 16, 1927
Paper No. 5 B	Mar. 12, 1928
Paper No. 6	Aug. 6, 1928
Paper No. 7 C	Jan. 4, 1929
Paper No. 10 D	Sept. 26, 1929
Paper No. 11	Oct. 4, 1929
Paper No. 12 E	Apr. 1, 1930
Paper No. 13	Jan. 14, 1931
Paper No. 14 F (Amendment cancelling claims)	July 8, 1931
Notice of allowance dated	July 22, 1931
Paper No. 17 G (Amendment under Rule 78)	Jan. 19, 1932
Paper No. 18 H	Jan. 22, 1932
Paper No. 19	Jan. 23, 1932
Paper No. 21	Jan. 28, 1932

5. Certified copy of file wrapper contents Patent No. 1,856,340, to Joerissen. In the printed record, reproduce only the following portions of this Exhibit:

Original specification, claims and drawings	Feb. 12, 1927
Paper No. 2	June 21, 1927
Paper No. 3 A	Dec. 16 (17), 1927
Paper No. 4	May 14, 1928
Paper No. 6 B	Oct. 22 (23), 1928
Paper No. 7	Feb. 20, 1929
Paper No. 10	Aug. 8, 1929
Paper No. 11 D	Sept. 26, 1929
Paper No. 12	July 30, 1930
Paper No. 13 E	Jan. 9, 1931
Paper No. 14 F	Jan. 16, 1931
Paper No. 15	Aug. 25, 1931
Paper No. 16 G (Amendment)	Dec. 8 (9), 1931
Paper No. 17 H	Dec. 15 (16), 1931
Paper No. 18 I	Feb. 4 (5), 1932
Paper No. 19	Mar. 12, 1932
Paper No. 20 J	Mar. 18 (19), 1932
Notice of allowance	Mar. 28, 1932

6. Copy of Patent No. 1,856,340.

11. Enlarged chart of Figures 5 and 6 of Re. 19,076.

12. Enlarged chart of Figures 1 and 3 of Going Patent No. 1,908,140.

13. Enlarged chart of Figures 1 to 4 of Patent No. 1,856,340.

14. Diagram illustrating movement of parts of
56 mechanism disclosed in Going patent No. 1,908,140.

15. Drawing showing machine with three (3) Joerissen type actions.

Defendants' Exhibits

D-1, D-2, D-3. Drawings of Going Patent No. 1,471,153 illustrating 1921 Noiseless Portable Machine.

G-1, G-2, G-3. Enlarged drawings showing in three (3) positions the action disclosed in Going patent No. 1,908,140.

K. Pages 1, 4 and 12 of pamphlet entitled "Whispers", dated December, 1921.

L. Pages 1, 8 and 9 of pamphlet entitled "Whispers", dated April, 1922.

M. Page 1, the Copyright notice from page 2, and the illustrations on page 6 of pamphlet entitled "Noiseless Portable Typewriter—Operating Instructions".

O-1, O-2, O-3. Drawings showing the type action of Going patent No. 1,471,152 in three (3) positions.

P. Enlargement of Figures 5 and 6 of Re. 19,076.

Q. Drawing in two (2) colors.

R-1, R-2, R-3. Photographs of Joerissen plate model showing parts at rest, fully operated, and in intermediate position.

S. Drawing showing toggle of Re. 19,076 moved to straightened position.

T. Drawing showing Defendants' type action in three (3) positions.

W. Drawing illustrating interference arising between a driving member and a driven member moving in different planes.

57 The following patents:

403,075	Rennyson	May 7, 1889
567,241	Kidder	Sept. 8, 1896
567,242	Kidder	Sept. 8, 1896
735,090	Green	Aug. 4, 1903
833,281	Alexander	Oct. 16, 1906
842,586	Schaaff	Jan. 29, 1907
885,346	Jackson	Apr. 21, 1908
900,931	Jackson	Oct. 13, 1908
1,122,764	Kidder	Dec. 29, 1914
1,123,771	Lorenz	Jan. 5, 1915
1,214,371	Roberts	Jan. 30, 1917
1,261,751	Anderson	Apr. 9, 1918
1,261,752	Anderson	Apr. 9, 1918
1,282,410	Going	Oct. 22, 1918
1,289,731	Going	Dec. 31, 1918
1,312,820	Anderson	Aug. 12, 1919
1,312,821	Anderson	Aug. 12, 1919
1,471,152	Going	Oct. 16, 1923
1,471,153	Going	Oct. 16, 1923
1,491,475	Going	Apr. 22, 1924
1,561,450	Going	Nov. 10, 1925
1,565,554	Eriksen	Dec. 15, 1925
1,573,544	Going	Feb. 16, 1926
1,574,285	Going	Feb. 23, 1926
1,615,694	Going	Jan. 25, 1927
1,615,835	Going	Feb. 1, 1927
1,760,641	Going	May 27, 1930
1,908,140	Going	May 9, 1933

It is further stipulated and agreed by counsel for the parties in the above entitled cause, that the following Exhibits introduced in evidence on trial in the District Court of the United States for the District of Columbia, which cannot be reproduced in the printed record, are to be used as physical Exhibits on the argument:

Plaintiff's Exhibits

7. Remington Noiseless Portable Machine No. N-39852.

8. Plate model of the Joerissen mechanism as disclosed in Figures 5 and 6 of the patent in suit.

Defendants' Exhibits

B. Noiseless Typewriting Machine.

C. Plate model, with certain parts removed, of
58 1921 Noiseless Portable Typewriter.

E. Plate model of present Remington Noiseless Portable Machine.

F. Hand-made typewriting machine.

H. Demonstration model.

I and J. Films of Joerissen, Noiseless and Remington type actions.

N. Model of Defendants' type and key action.

It is further stipulated and agreed by counsel for the parties in the above entitled cause, that, at the end of Defendants' Bill of Particulars, instead of reproducing the pages from "Whispers", the following notation shall be made:

"The pages of the house organ 'Whispers' for December, 1921, and April, 1922, referred to in Section II, Subsection 3, are reproduced hereinafter as Defendants' Exhibits K and L."

DOUGLAS, OBEAR, MORGAN & CAMPBELL
CUSHMAN, DARBY & CUSHMAN
By ARLON V. CUSHMAN
Attorneys for Plaintiff.

Service of a copy of the foregoing is acknowledged August 14, 1936.

T. A. HOSTETLER
Attorney for Defendant.

59 *Designation of Record on Appeal*

Filed July 15 1936

* * * * * * * * *

Now comes the plaintiff, Carl A. Joerissen, by his counsel and requests the Clerk of the District Court of the United States for the District of Columbia, to prepare the transcript of record in this cause and to include in said transcript the following:

1. Amended bill of complaint.
2. Joint answer of both defendants.

3. Defendants' motion for interrogatories.
4. Plaintiff's answer to defendants' interrogatories.
5. Plaintiff's motion for interrogatories.
6. Defendants' answer to plaintiff's interrogatories.
7. Plaintiff's motion for bill of particulars.
8. Defendants' bill of particulars.
9. Opinion of court.
10. Findings of fact and conclusions of law and exceptions thereto.
11. Final decree.
12. Memorandum of allowance of appeal.
13. Memorandum for deposit of costs on appeal.
14. Extensions of time for filing statement of evidence.
15. Statement of evidence.
16. Assignment of errors.
17. Stipulation as to use of physical exhibits.
18. This designation.

DOUGLAS, OBEAR, MORGAN & CAMPBELL
CUSHMAN, DARBY & CUSHMAN
By HUGH H OBEAR
Attorneys for Carl A. Joerissen

60 Service of a copy of the foregoing Designation of Record acknowledged this 15 day of July, 1936.

T. A. HOSTETLER,
Attorney for Defendant.

---

61 District Court of the United States
for the District of Columbia.

UNITED STATES OF AMERICA,
District of Columbia, ss:

I, Charles E. Stewart, Clerk of the District Court of the United States for the District of Columbia, hereby certify the foregoing pages numbered from 1 to 60, both inclusive, to be a true and correct transcript of the record, according to directions of counsel herein filed, copy of which is made part of this transcript, in cause No. 56895 in Equity, wherein Carl A. Joerissen is Plaintiff and Remington Rand, Inc. a corporation of Maryland and Remington Rand, Inc.

a corporation of Delaware are Defendants, as the same remains upon the files and of record in said Court.

IN TESTIMONY WHEREOF, I hereunto subscribe my name and affix the seal of said Court, at the City of Washington, in said District, this 1st day of October, 1936.

C E STEWART,
(Seal) *Clerk.*

62 Endorsed: United States Court of Appeals for the District of Columbia Filed October 2 - 1936 Moncure Burke, Clerk

Filed Aug 15 1936

In the District Court of the United States for the District of Columbia

Holding an Equity Court

Equity No. 56,895

CARL A. JOERISSEN, *Plaintiff*

vs.

REMINGTON RAND, INC., a corporation of Maryland REMINGTON RAND, INC., a corporation of Delaware *Defendants*

Statement of Evidence

APPEARANCES:

Arlon V. Cushman, Esq., of Cushman, Darby & Cushman;
Hugh H. Obear, Esq., of Douglas, Obear, Morgan & Campbell;
Gorham F. Freer, Esq.
For Plaintiff

Edwin T. Bean, Esq.
Richard W. Treverton, Esq., and T. A. Hostetler, Esq.
For Defendants.

63 *Statement of Evidence*

The following stipulation was read into the record:

Uncertified printed copies of domestic and foreign patents, or photostatic copies of patents out of print, may be introduced with the same force and effect as certified copies, subject to correction if error be found.

For the purpose of this suit, the entire right, title and interest in and to the reissued patent, No. 19,076, granted February 13, 1934, is in plaintiff, Carl A. Joerissen, subject to verification.

Defendants made and sold noiseless typewriting machines like "Remington Noiseless Portable N-39852", which may be introduced in evidence by plaintiff, since February 13, 1934, the date of reissued patent No. 19,076, and prior to the date of application for said reissued patent.

The Kidder, Anderson and Going patents set up in the answer are owned by defendants or their predecessors.

The following were offered and received in evidence as Plaintiff's Exhibits:

A copy of the patent in suit, Reissue 19,076, dated February 13, 1934, granted to C. A. Joerissen, as Plaintiff's Exhibit No. 1.

A copy of original patent No. 1,846,339, granted February 23, 1932 to C. A. Joerissen, as Plaintiff's Exhibit No. 2.

A certified copy of the record of the application for patent of Reissue No. 19,076, as Plaintiff's Exhibit No. 3.

A certified copy of the file wrapper contents and drawings of original patent No. 1,846,339, as Plaintiff's Exhibit
64 No. 4.

A certified copy of the file wrapper contents and drawings of Joerissen patent No. 1,856,340, granted May 3, 1932, as Plaintiff's Exhibit No. 5.

A copy of Joerissen patent No. 1,856,340, granted May 3, 1932, as Plaintiff's Exhibit No. 6.

"Remington Noiseless Portable No. N-39852", in accordance with stipulation No. 3 between counsel, as a machine made by defendants, as Plaintiff's Exhibit No. 7.

Plaintiff's Case

Mr. Charles Alexander Mason was called on behalf of plaintiff as an expert in mechanical matters, and having been first duly sworn, testified as follows:

He stated that he had served for twenty-four consecutive years as an Examiner in the Patent Office and that during ten years of this period, he was a Principal Examiner. In 1908 he resigned from the Patent Office and then entered upon the practice of soliciting patents and of acting in a great many cases as an expert in patent matters.

He said that he was familiar with the patent in suit, Reissue 19,076, and referring to Figures 5 and 6 of the drawings of the patent, to which claim 23 in suit particularly applies, he stated the mechanism therein disclosed to involve a type bar 4 pivotally mounted and arranged to swing from a downward to an upward position in effecting an operative stroke. A toggle is connected with the type bar and is composed of members 30 and 31 of which 31 is pivoted to the type bar and 30 is pivotally connected
65 to a link member 12 which is sustained pivotally from a fixed bracket and has a downward and rearward movement and he explained that a rearward movement is a movement away from a person facing the
66 machine. He stated that the key bar 1 pivoted at its rear end at 2 has an intermediate pin engaged with a slotted arm extending from a lever 6 fulcrummed at 7, the lever 6 being provided at its upper end with a pin which plays in a slot. The key bar 1 is made in two parts pivotally connected and yieldingly held by a spring 1*a* which tends to hold the key bar parts in normally straightened position as shown in Figure 5 of the drawing. The forward end portion of the key bar has a pivotal connection with the link 16 whose upper end is provided with a slot 16a in which plays a pin carried by the forward end portion of the link 12. There is also a second link member 32 connected with the rear end portion of the toggle link 30 beyond the pivot 11 of the latter, the link 32 being connected at its other end with a lever 33, having a slot which receives a pin at the lower end of the sub-lever 6.

In the operation of the device, starting as in Figure 5, the first movement of the key bar rocks the sub-lever 6 and by means of the pin which engages the slot of the type bar 4, the type bar is swung from its downward position and upwardly and rearwardly toward the platen, carrying with it the toggle until the parts have reached a position where the type bar has been positioned a short or slight distance from the face of the platen containing the paper, the action of the toggle being at this time through the movement imparted thereto through the lever 6 and type bar 4, to move from a collapsed position as shown in Fig. 5 to a relatively straightened position which checks the movement of the type bar, giving it by that movement a terminally checked throw in position which is in front of

the platen. A further downward movement of the key bar causes the link 16 to move sufficiently far for the pin at the forward end of lever 12 to be entated by the upper end of slot 16*a*, whereupon a second movement of the type bar finally is applied through this means to give the type
67 bar a final squeeze stroke whereby printing is effected. The type bar is thus given two movements, a first movement which takes up the major portion of the space and which goes quite rapidly relative to the second movement which is thereafter applied as a short slow movement to squeeze the type against the paper, thereby avoiding the clicking noise which typewriters have which are not equipped with some means to reduce that noise or render it relatively noiseless. All the parts concerned with the movements of the type bar, including the toggle and the link 12, for giving the final movement to the bar, are operated and moved below the plane of the operator's station, so that there is no obstruction to the operator's vision.

A plate model of the typewriter action was handed to the witness who stated that it embodied the same mechanism with the same mode of operation as that disclosed in Figures 5 and 6 of the patent in suit and the model was offered and received in evidence as Plaintiff's Exhibit No. 8.

"By Mr. Cushman:

Q. I notice in the Joerissen patent, particularly in the claims involved, a reference to the toggle mechanism, and it is spoken of as moving from 'a normally collapsed downwardly extending position' to a 'relatively straightened position.'

Will you please explain what your understanding of that statement as to the movement of the toggle is? A. My understanding of that meaning is that the toggle as disclosed in its position of rest shown, for example, in Fig. 5 of the patent—

Q. You mean, in its collapsed position? A. It is in a collapsed position—that a relatively straightened position of that position which it assumes after the toggle has been raised, and where it is positioned in such manner as to check the throw heretofore imparted to the type bar is relatively straightened as compared with its first or
68 collapsed condition.

Q. Is it your understanding that when we say 'relatively straightened,' we must necessarily have the toggle

completely straightened from its collapsed position? A. So far as the language 'relatively straightened' is concerned, that would not necessarily mean completely straightened.

Q. It means, as I understand you, the relation to the relatively straightened position with respect to its initially collapsed position? Is that it? A. It does."

69 Referring to the delayed action of the pull rod 16 after the key lever and type bar had gone through their initial movements and in giving the reason for that delayed action and how that delayed action was obtained, the witness stated that in the Joerissen construction you get it by reason of the fact that the link 16, which is instrumental to give the final stroke to the type bar, is provided with a slot, in which plays a pin at the forward extremity of link 12, and the link 16 has to move until the pin has reached the upper terminal of that slot before the final action is given to the type bar through the toggle.

As "means thereupon effective to operatively swing said link portion to complete the stroke of the type bar through said toggle", the witness identified the link 16*a* which connects the key bar and the link portion 12.

The witness then described the construction shown in Going patent No. 1,908,140, under which the machine, Plaintiff's Exhibit No. 7 is made. Referring to a chart (subsequently offered and received in evidence as Plaintiff's Exhibit No. 12) which is an enlargement of Figures 1 and 3 of the said Going patent, he referred to the type bar 13 pivotally mounted at 14 to swing rearwardly from its position of rest to make contact with the paper. The type bar has connected to it, a toggle comprising links 70 and 73, the terminal of the link 73 being pivoted at 75 in the machine. A key lever having a finger base 36 is pivoted in the machine base and arranged to move about its pivot downwardly and upwardly in the operation of the machine. A loop 32 connected to the key lever is pivoted to a lever 22 pivoted in the machine at 23, one arm of the lever 22 being pivotally connected at 21 to a slide 18 which

70 through several teeth 17 is connected to the lower end of the type bar 13 below the pivot of the latter. Connected with the forward link 73 of the toggle, by a pivot 82, is another link which has its upper pivot 84 connected with a further link 86 whose lower portion is pivotally supported at 89 on the frame. The link extending between the

pivot points 82 and 84 has projecting from it a weighted member 80 designated in the patent as a momentum accumulator.

Upon depression of a key lever, the toggle comprising members 70 and 73 is straightened, or relatively straightened—it may not be precisely straightened but it is relatively straightened—by the action of the key lever until the latter comes in contact with the stop 47 which arrests the key lever and thereafter the final movement or squeeze stroke is effected by the momentum accumulator or weight 80, and that momentum accumulator or weight 80 moves together with the link between the points 82 and 84 downwardly and rearwardly during that movement, which is the second movement or second phase of the movement of this noiseless mechanism, and is performed after the stroke is arrested by this stop through the instrumentality of the parts previously referred to.

The link between the points 82 and 84 has a downward and rearward passage from its initial position of rest during the performance of the final squeeze stroke or short slow movement of the type bar which is imparted through the weight whereas in the Joerissen patent in suit, the final movement is effected by a downward and rearward movement of link 12. In that case, it is effected by a link 16, but in both cases, there is a link instrumentality which moves downwardly and rearwardly due to that.

The witness was then handed a plate model and stated that in his opinion, it fairly represented the construction shown in Figure 1 of Going patent No. 1,908,140, and
71 defendant's machine, Plaintiff's Exhibit 7, and the model was then offered and received in evidence as Plaintiff's Exhibit No. 9.

The witness stated that he found "means for effecting the final printing movement of the type" in the weight or momentum accumulator 80 of the Going patent, which effects through its momentum, after the first stroke is arrested by the stop 47, the final movement or squeezed movement of the type bar.

The witness was then handed a copy of Joerissen patent No. 1,856,340. In this disclosure, he identified the upwardly swinging type bar 5 and the toggle of which one member is connected with the type bar and the other is pivotally connected at 11 to a downwardly and rearwardly moving link

portion 12. The type bar is initially moved upward by connections from the key lever 3, these connections comprising a link 15, a lever 16 and a link 19. The final movement of the type bar is effected as the key lever 3 strikes the stop 22 on a lever 21. The lever 21 is thus set in motion and through a rod 20 which is connected with an extension of link 10, swings link 12 downwardly and rearwardly about its center 13.

The witness stated that as to means operative to complete the printing stroke, he considered that the pull rod 16 of the patent in suit, the weight 80 in defendants' machine, and the pull rod 20, weight 23 and weight 12 of Joerissen patent No. 1,856,340 will all accomplish the same result and are merely three different mechanical variations for accomplishing the same result.

In defendants' machine and the Going patent No. 1,908,-140 the weight 80 connected with the link alone makes the final imprint while in the Joerissen patent in suit there is a pull rod 16 having a delayed action which moves the mass of link downwardly and rearwardly and performs that function.

72 The witness was referred to the terms "toggle" and "relatively straightened toggle" and asked to compare the toggle of the reissue patent in suit with the toggle of the Going patent No. 1,908,140 and the toggle of the later Going patent No. 1,856,340 and point out to the Court the significance of that term "relatively straightened" as applied to those three toggle mechanisms.

"A. In the Joerissen patent, reissue No. 19,076 in suit, as shown in Fig. 6 of the drawings and in the chart, the toggle is in its final position at the moment of printing, straightened out,—that is to say, the two links are in a straight line, 30 and 31.

The Court. Do they reach that position before it reaches the platen?

The Witness. They assume that position, your Honor, as I understand, just momentarily before the final printing stroke.

The Court. Is not that arm pressed against the platen after the toggle has become straightened and pressed by the further downward movement of the key?

The Witness. It has as a matter of time become straightened a split second, we will say, before that.

The Court. I do not mean in time, but in space. How far from the platen is it when it becomes straightened?

The Witness. I am unable to say the exact distance, but it is very close. The second phase of the operation is of course performed and it has reached the point to which you refer, that is, the actual pressure of the type against the platen.

Mr. Cushman. My question, your Honor, directed to these three mechanisms is merely to give us the witness's views on what we mean when we say "relatively straightened", which is the language of the claims in the Joerissen patent we are considering.

The Witness. Well, in the Joerissen patent, as
73 I have stated, the toggles are actually in a straight line, and the term "relatively straightened" must refer to that condition.

In the defendants' machine, and assuming that that machine is illustrated in the Going patent No. 1,908,140, the toggle members are straightened also at the moment that the printing stroke is made, so that the term "relatively straightened" would apply in that case to an actual straightening of the toggle, as shown for example in the illustration indicated as Fig. 3 wherein, as your Honor will see, the toggle is straightened, the links are straightened. In Fig. 3 it is shown below the central figure in the chart.

By Mr. Cushman:

Q. You mean the dotted line? A. The dotted line."—

The witness then proceeded to identify the power storing means, recited for example, in claim 25 of the patent in suit, as springs 1*a*, the usual key lever restoring spring shown at the right hand end of Figure 6 and designated 21 in Figure 3, and a further spring indicated at 20, Figure 3, of the Joerissen construction and the usual return spring 60 of the Going construction.

Cross Examination

When the witness was asked about his experience, if any, with typewriter key actions, he stated that 28 or 30 years ago he owned a typewriter, took it all to pieces and examined it because he was interested in the mechanism and made quite a little study of it at that time (referring to a time 30 years before); that after leaving the Patent Office

his office had made several searches to determine patentability of typewriter mechanisms; that they had one
74 or two cases which he thought he had prepared on typewriter mechanisms; that at various times the typewriting machines in his office had gotten out of order and being mechanically inclined he had investigated the trouble as best he could and in those various ways he had become more or less familiar with typewriting mechanisms; that while in the Patent Office he did not at any time examine the class of typewriter key actions nor had he had any practical experience from an engineering standpoint in the design of typewriter key actions.

The witness stated that he was testifying as a patent man and not as a typewriter expert. He stated that he had checked the plate model (Plaintiff's Exhibit No. 8) against Figures 5 and 6 of the Joerissen patent and that the spring connected to the end of the link portion 12 in the model was not shown in Figures 5 and 6 of the patent but was disclosed in Figure 3 of the patent at 20. He saw no difficulty in connecting a spring 20 to the link portion 12 of Figure 5 although this link portion is differently shaped from the link portion of Figure 3.

"Q. In considering the claims of the patent in suit for the purpose of determining the scope and interpretation of those claims in order to determine whether or not there is an infringement, it is necessary, is it not, to consider carefully the prior art? A. Surely.

Q. In other words, the prior art very often has a limiting effect upon claims, is that correct? A. Oh, yes, that is correct?

Q. In your testimony on direct examination, you did not I believe allude to the prior art or state what effect the prior art had upon the interpretation of claims 23 to 28 of this Joerissen reissue patent. A. No, I was not asked to
75 do that."

Referring to Going patent No. 1,908,140, he stated that the portion 90 extending between pivots 82 and 84 is the downwardly swingable link portion called for in claim 23 of the patent in suit.

"A. It is that portion which is indicated by the reference numeral 90, and it extends between the two pivots 82 and 84.

Q. It is not the weight 80, is it? A. Not per se, no. The weight is connected to it. The link, if you regard it as a separate entity, is the part 90."

He added that the link 90 moves rearwardly as well as downwardly from its starting position of rest. In Fig. 1 of the Going patent the point 82 is directly below the point 84 whereas in Fig. 3 the point 82 is above 84; that is turned right around during the last part of the stroke.

76 "Q. During the entire stroke, then, is it not true that the lower end, the end 82 of the link 90 moves upwardly instead of downwardly? A. It moves downwardly at the beginning and from its initial position, and also that is true of the pivot 84, and so that both of those pivots, the link as an entirety moves downwardly as well as rearwardly from its starting position of rest. * * *"—

He arrived at this conclusion from the chart which he had prepared, and produced the chart (subsequently offered and received in evidence as Plaintiff's Exhibit 14). He explained that the lines indicating the arcs of movement of the two pivots of the link (90) are such as are followed by those pivots during the movement from initial position.

"Q. You have not shown the terminal movement on the drawing? A. No, I have not.

Q. So then, if I should tell you that I knew that the general direction of movement of that link 90 was upward during the entire movement; that is, that its terminal position was higher than its initial position, you would not contradict that statement? A. No, but I would say this, that I consider that movement of that link is an under-slung movement. It goes down. It certainly starts downwardly. I exaggerate that with my hand, but it goes down from the beginning of its initial movement, and it is denominated as an under-slung movement in the patent. That is the way it is described."

As to the downwardly swinging link of the Joerissen construction, the witness agreed that this link "does not start to go down right away" and does not swing downwardly until the printing stroke. Asked if it was not true

77 that the link 90 of the Remington device is swinging upwardly instead of downwardly during the printing portion of the movement, the witness said:

"A. Well, it is a very difficult thing to find out just exactly when that upward movement begins, but so far as—

and we were talking about the invention described in the claims of the patent in suit, and so far as they are concerned, that is not material as far as I understand. It does not make any difference just when that begins. The point is that the beginning of the movement of the link in both cases, while it may occur at slightly different points in the operation of the mechanism as a whole, the beginning of that movement is downwardly and rearwardly in each case."

With reference to link 90, he further stated that the link begins to swing upwardly between the full and dotted line positions of Figure 3 of the Going patent but after its initial movement. It has a final upward movement but its initial movement is down.

The witness expressed unfamiliarity with the Underwood type of machine mentioned in the specification of the patent in suit.

"Q. How does the Underwood type of machine distinguish from other types of typewriting machines, if you know? A. I don't know that.

Q. You don't know whether the Remington portable model in evidence is an Underwood type of machine or not? A. No, I could not tell you that."

He stated that he had never seen a complete typewriting machine embodying the type action shown in Figures 5 and 6 of the patent in suit but stated that he knew of no reason why a skilled typewriter mechanic could not put a full complement of the Joerissen actions in an ordinary typewriting frame if it was made to fit those parts.

"Q. I believe that you have stated that the last
78 means of claim 23—Would you read that, please?
A. (Reading) "Means thereafter effective."

Q. What does that refer to—"thereafter effective"? Upon the happening of what event does that "thereafter" or "thereupon" refer to? A. It means after the terminally checked throw.

Q. What does terminal checked throw mean? A. A terminal checked throw as read upon the Joerissen patent means that condition of the type bar where its initial movement has been checked and just prior to the printing operation, and the—Does that answer your question?

Q. I would like to get a little clearer understanding of just what you mean by "checked". Do you mean that the

type bar itself is stopped or that it is merely slowed down, or just what does that word "checked" mean? A. As I understand it, it means that the original speed imparted to the type bar by the connections between the bar and the key lever has been checked. It may be practically stopped, as it is in this case. It is checked. It is checked when the toggle has reached a position where its forward movement is—well, where it would be for a split second rested. Just momentarily. It is something that you could not really see with the naked eye.

Q. But this drawing is doubtless correct, is it not, that in this period of the terminally checked throw, the toggle is straightened and yet the type face is not yet upon the platen? A. Those two phases of the operation, the positions occur very rapidly, and at the time that the toggle is straightened, I suppose we have a terminally checked throw at or about that time. The further movement of the toggle to make the printing stroke of course occurs after
79 that.

Q. When this toggle does straighten so that you get out terminally checked throw, the type bar will be brought to an absolute stop, won't it, in advance of printing position? A. It will be brought to an arrested position, temporarily arrested, but not stopped for any moment of time which could be measured, I think, with any accuracy at all. It is a momentary checking—that is what I would call it—of the forward movement. It might be like that and beyond that. Just how long it stops there, is of course problematical, but it is in a flash.

Q. But it does occur at some particular moment, does it not? There is some critical position there? A. Yes, there is some critical position, but the amount of time as measured by time that that type bar stays in checked throw position is indeterminable, I should say".

He agreed that the model (Plaintiff's Exhibit No. 8) embodied a terminally checked throw as disclosed in the patent in suit. As to slow motion pictures, the witness expressed the view that they were rather tricky things because they are deceptive in that the time element is not accurately worked out. He admitted that he had not had a great deal of experience with modern high speed motion picture work.

Relative to the Joerissen construction, he stated that the movement after the checking is slower than before checking and that there is a critical point where the change occurs. He agreed that in the claims in suit, the second movement is contemplated as taking place after the critical point of checking.

"Q. Mr. Mason, when you were giving your answers this morning to Mr. Cushman, did you consider the limiting effect of the prosecution of this Joerissen patent in the Patent Office upon the claims of the patent? A. Well, I have considered that some time ago; not recently. I
80 have seen the art cited by the Examiner. I have read the arguments of the attorney for the applicant.

Q. But not recently? A. Not recently."

81 *Redirect Examination*

The witness stated that he did not necessary interpret the term "terminally checked throw" to mean an absolute stoppage of movement. In the Going patent there was shown and described a slowing up of the type bar and an arresting or actual stopping of the printing key, but there is nothing there that states in so many words that the type bar is stopped or actually arrested. It is slowed up. If you arrest the movement of a thing or slow it up you terminally check its movement; you check its movement above that point of course.

Referring to the diagram (Plaintiff's Exhibit No. 14) he identified the black lines as representing the rest position of parts and the red lines as representing a moved position of the parts and found that the centers 82, 84 dropped in moving from the black line position to the red line position to a slight extent.

"The Court: I do not see that this point (indicating) which corresponds I think to the 82, that that goes down at all.

The Witness: Yes, it goes down slightly and comes up.

The Court: If it goes down, it goes down almost infinitesimally.

The Witness: These are very small parts here. But if you will watch that, I think you will find that it swings from this center here (indicating). Here (indicating) is the center of motion, right here at 75. It is just enough to make

a little arc. It has to pass that arc, and in doing so it must go below a vertical line.

The Court: It is infinitesimal.

The Witness: It is slight."

The advantage of an initial downward movement as distinguished from an upward movement, he stated to
82 be an easy starting of the movement of the key because the operator is relieved of the effort of lifting the parts, and although the lifted weight might be very slight, the thousands of pressures exerted by the operator might, if relieved, result in less tiring action. Another advantage of the downward movement is lack of obstruction to the view of the operator and the arrangement also makes for compactness.

Recross Examination

The witness stated that the diagram (Plaintiff's Exhibit No. 14) was probably enlarged more than eight times and agreed that the point 82 in moving from the black to the red line position, probably dropped around 1/16 of an inch, which distance in the actual machine would be around 1/100 of an inch. He stated that theoretically, even this small drop worked for more effortless operation of the machine. The result would be quite considerable. It might be even perceptible.

The witness was referred to the file wrapper and contents of Joerissen patent No. 1,846,339 on which the reissue patent in suit is based. He found that the Office action, Paper No. 4, apparently mailed March 19, 1927, rejected claims 1 to 4, 6, 7, 10, 15 and 17 on Going patent No. 1,471,-153. He then read from the "remarks" accompanying the responsive amendment, which was apparently filed March 13, 1928.

"A. (Reading) "The claims rejected by the last Official letter have been slightly amended so that each of them will unmistakably distinguish applicant's improvements from the disclosure of the patent to Going cited."

Q. And that Going patent was the one that we said this morning was just exactly like the 1921 Noiseless typewriter machine, was it? A. If I recollect correctly, I believe
83 it was.

Q. Will you continue to read what was said on behalf of Mr. Joerissen in the prosecution of this patent ap-

plication? A. (Reading) "Applicant's invention differs radially from that of the reference structure."

Q. Meaning, from the Going patent? A. Yes. "As clearly set forth in the specification and specifically referred to in the claims as amended, an essential feature of the present invention is that the movement of the type carrier towards the platen is positively checked prior to its reaching printing relation with the platen, and the printing movement of the carrier is completed by a rocking of the fulcrum support 12 after such checking."

Q. In other words, it was argued there, was it not, that this terminally checked throw which you have stated, I believe, is one of the limitations of the claims 23 to 28, was not in that Going patent No. 1,471,153? A. In this paragraph from which I have been reading, it states that "an essential feature of the present invention is that the movement of the type carrier towards the platen is positively checked prior to its reaching printing relation with the platen, and the printing movement of the carrier is completed by a rocking of the fulcrum support 12 after such checking." In the clause I have read, that is all it states on that. Do you want me to read a little further?

Q. I ask you whether or not in this amendment to this rejection of the Patent Office, Joerissen's attorney did not argue that this feature of the terminally checking was not present in the Going patent No. 1,471,153. A. He does not say it in so many words in that paragraph. You might infer that he meant that, but he did not say it. He said that was an essential feature of the invention.

84 Q. Would you refer to and read the next to the last paragraph in the remarks in that action? A. Replying to the Examiner's criticism?

Q. Yes. A. (Reading) "This claim is definite and properly descriptive of applicant's construction. The applicant has not stated that the member 12 is 'directly connected with the type bar' as assumed by the Examiner, but as pointed out in the claim, the member 12 which is pivotally supported in advance of the platen is connected to the type bar. A reconsideration of the rejection of this claim on the ground of its being indefinite is therefore requested. The claim has been slightly amended so that it will, as above pointed out, clearly distinguish applicant's construction from the construction of the Going patent. There is a radi-

cal difference in operation between the structures of the Going patent and that of the present case. The reference structure does not provide for first checking the movement of the type carrier and then another movement to complete the printing stroke.' ''

He testified that claims 23 to 28 in suit, each requires that there be a terminally checked throw prior to the type bar reaching the platen.

A certified copy of the file wrapper contents of the Going application on which patent No. 1,908,140 is based was offered and received in evidence as Plaintiff's Exhibit No. 10.

Defendants' Case

A book of patents was offered and received in evidence as Defendants' Exhibit A.

Frederick W. Shremp was called as a witness on behalf of the defendants and after being first duly sworn,
85 testified as follows:

The witness stated that he was the assistant typewriter development engineer of Remington Rand and had been in the typewriter business since 1912, starting at that time with the Remington Typewriter Company and continuing with Remington Rand, Inc., after the merger. He became in charge of the service department and later became a field instructor, travelling to the different offices in the eastern part of the United States for purpose of instructing the men in the servicing and repair of typewriters. In 1929, became connected with the Remington Rand Laboratory at Stamford, Connecticut, under Mr. Going, and since that time has inspected and passed upon various typewriter constructions and has written three or four instruction books on various machines.

He identified a noiseless portable machine manufactured by the Noiseless Typewriter Company prior to its merger with the Remington Typewriter Company, this machine being offered and received in evidence as defendants' machine Exhibit B, built under Going patent No. 1,471,153, and stated that he was entirely familiar with the key and type action of that machine. He identified a plate model, offered and received as defendants' Exhibit C as a type action removed from a 1921 machine such as Exhibit B. Also, he identified three drawings, Defendants' Exhibits D1,

D2 and D3 as showing respectively the initial, intermediate and final positions of the parts of a machine similar to Defendants' Exhibits B and C and as disclosed in Going patent No. 1,471,153.

Defendants' Exhibit E was offered and received in evidence and was identified by him as a plate model exhibiting a type action identical with the type action used in defendants' present construction (machine in suit) and stated he had been familiar with this construction since 1929 and knew that it was developed by Mr. George Going. A
86 hand made machine, Defendants' Exhibit F, was offered and received in evidence and was identified by the witness as embodying the construction disclosed in Going patent No. 1,908,140, and as being substantially the same as the present machine having the same type bar, toggles and momentum accumulator, the machine having been first seen by him late in 1929. He then identified Defendants' Exhibits G1, G2 and G3 as enlarged drawings showing respectively, initial, intermediate and final positions of the parts of the machine as disclosed in Going patent 1,908,140 and embodied in Defendants' Exhibits E and F.

He stated that the normal operations of the key actions of these machines cannot be observed with any great degree of accuracy with the naked eye since the type bar moves from rest to printing position in about 3/100 of a second and that for this reason, he customarily used high speed motion pictures in considering typewritter actions. After objection by plaintiff's counsel to motion pictures as not being a proper form of evidence, the witness described at length, the method of taking high speed pictures and the method of developing the films, showing familiarity with all the operations except the developing or processing operation which he stated was a secret process controlled by Eastman. The pictures are taken at a speed up to a maximum of approximately 1200 exposures per second, a time record appears on the strip of film and the film on which the pictures are taken is the identical film used in projecting the pictures. By the developing process, the image is made positive on the film used to take the pictures. The normal projection speed is 16 to 20 exposures

per second, this being in about the ration of 1 to 75 to the speed of the camera.

He stated that the camera was owned by his company and is used to check up on mechanical movements to determine timing or to determine where a fault lies
87 and that he had taken 80 or 85 fifty foot reel pictures and considered them to portray accurately, the exact mode of operation of the photographed machine.

The witness then stated that he had taken high speed moving pictures of Defendants' Exhibits C and E at a speed of approximately 1200 exposures per second and that he had taken similar pictures of the plate model (Plaintiff's Exhibit No. 8) in the presence of the plaintiff and his counsel and that the model, for the purpose of taking the pictures, was operated by the plaintiff Joerissen. Two reels were taken of Plaintiff's Exhibit No. 8, one at 1200 exposures per second and the other at 1000 exposures per second, the latter because he considered that the plate action was being operated rather slowly.

With the Court's permission, the witness then projected the three films, pointing out in defendants' exhibits what he stated to be the continuous movement of the type bars and that the toggles practically straightened at the time of printing. He pointed out that the same condition may be observed to exist in a practical way in the picture of the 1921 noiseless plate model and the present construction, that the momentum accumulator is the cause of the printing effort, not physical operation, and that at the time of printing the momentum accumulator is going up to the rear.

With respect to the film of Plaintiff's Exhibit No. 8, he remarked that the stroke was definitely arrested, the type bar definitely stopped, and that a rebound occurred before it reached the platen, also that after the type bar had been stopped printing was caused by a further depression of the key lever which operates link 12.

He testified that there was no checking or stopping in the Remington Noiseless Portable key action from the time it leaves the rest position until it reaches the platen, but that there was a decelerated movement of the type
88 bar 13.

"Q. I would like you to compare the 1921 Noise-

less portable construction with the present Remington Noiseless portable and point out what parts on the two drawings have the same function.

* * * * * *

A. The key lever 4 on the 1921 Noiseless portable has the same function as the key lever 34 of the present Remington portable. The bell crank 10 of the 1921 portable has the same function as the bell crank 27 of the present model portable. The link 14 of the 1921 model portable corresponds to the link 18 of the present model portable, the corresponding connection differing solely in that the present Remington portable has a rack and tooth connection, whereas we have a pivoting connection on the type bar 7 of the 1921 portable, as against the type bar 13 of the present model. We have a type bar which is a pivoting type bar number 7 in the 1921 portable and number 13 in the present construction portable. We have link members 26 and 30 in the 1921 portable.

Q. Those are toggle members? A. Those are toggle members, as against toggle members 70 and 73 in the present model portable.

We have also a momentum accumulator number 19, in the 1921 portable, and a momentum accumulator number 80 in the present construction portable.

We have a carrying arm mechanism for that momentum accumulator number 21 in the 1921 model, and the corresponding number on the present construction would be 86.

Q. In both constructions, I ask you what is the driving force during the initial part of the movement? A. The key lever is the driving force in the initial part of the movement.

Q. And during the terminal portion of the move-
89 ment, that is when the platen is moving into printing relation with the type bar, what is the driving force? A. The driving force is the momentum ac-
90 cumulator corresponding to 19 on the 1921 model portable, and number 80 on the present construction noiseless portable."

He stated that the slow motion pictures of the Joerissen plate model showed an action corresponding to the theory of operation described in the Joerissen patent specifica-

tion. He considered the straightening of the toggle as essential to stopping the movement of the type bar and that thereafter the printing is done by additional effort. That there was no pressure built up by straightening the toggle and utilized in actual printing in the Joerissen construction.

He stated that as far as he could see he did not believe the Joerissen key action as shown in Figs. 5 and 6 of the reissue patent could be set into an actual typewriting machine.

He stated that he was familiar with the Underwood type of machine as referred to in the Joerissen specification and defined it as a hammer blow pivot with a vertically mounted segment, a vertically mounted segment being one in which the unit or arc which carries the type bar and type bar pivoting fulcrum is upright as distinguished from a horizontally mounted segment wherein the arc is horizontally disposed. He then identified Defendants' Exhibit H as an Underwood type of machine insofar as the type bar mounting means was concerned, but not as an actual Underwood machine since it was an experimntal machine.

He stated that in the Joerissen construction, it is necessary that the toggle link and its controlling mechanism be in the same plane as the type bar, referring to the type bar 4, the links 30 and 31, and the lever 12, and that it would be impossible to mount 42 sets of those parts within a radius of the distance from the type guide to a point back possibly three-fourths or one-half of an inch below. He stated that in Defendants' Exhibit H an attempt had
91 been made to mount several Joerissen actions but without success, saying it was possible to incorporate only three actions and these would not operate without conflict since in the rest position of the parts, the upper ends of links 16 interfered. Furthermore, since the side actions were at an angle to the vertical, and the link 16 necessarily has to travel in the same plane as the movement of the type bar and its operating member 12, the witness as a typewriting expert did not know how one could connect the links 16 to the key bars to make an operative construction. In the Underwood type of machine, the type faces of the side actions extend at an angle to their supporting type

bars and these offset type faces in the side actions would interfere with the toggle members. The witness demonstrated in Defendants' Exhibit H the various points of interference and showed and stated how certain of the type bars could not get from a rest to printing position.

As to the Joerissen action, he stated that the member 12 is without a momentum factor since it has not been in motion and that furthermore, it has a spring or tension member connected to it that holds it in a set position. He stated that in Joerissen the toggle straightens before the type face reaches the platen.

Referring to the observation in the motion pictures of a rebound of the type bar 4 after it was checked and before the type face reaches the platen, he stated that in the Joerissen construction you have a fast moving type bar being terminally checked or positively stopped by a linkage and the force must be reflected either in the movement of the arm 12 or in a rebound of the mechanism itself and the energy put into the type bar is dissipated in arriving at a straightening of the toggle and stopping the movement of the type bar so that none of this energy is
92 available for printing: that in the Joerissen construction you get the energy for printing by an additional further operation of the key 1 after the type bar has been terminally checked. In the Remington and noiseless portables, there is no rebound since the toggle is straightened by the momentum accumulator and arrives at a pressure straightening only at the time of printing and no momentum of the type bar is lost or unavailable, aside from friction, for printing, and that the same thing is true of the 1921 noiseless portable. More energy is required to operate the Joerissen action than the 1921 noiseless portable.

Defendants' Exhibits I and J respectively, the film of the Joerissen type action and the combined film of the noiseless portable and Remington portable type actions were offered and received in evidence.

Cross Examination.

Being referred to defendants' charts D-1, D-2 and D-3, the witness stated that the link member 18 and its weight

19 move rearwardly and upwardly from initial to final position. As to Defendants' Exhibits E and F, made in accordance with Going patent No. 1,908,140, the witness stated that the linkage portion 90 and the momentum accumulator in that construction move definitely slightly downwardly from rest position.

As to Defendants' Exhibit H, the witness testified that it had Underwood characteristics but was a Stamford model machine, whereupon objection was taken to it as being simply a laboratory model and not an Underwood machine and an exception was noted.

The witness' attention was called to patent No. 1,471,153 under which he had stated Defendants' Exhibits B and C were constructed and he repeated that in those mechanisms the movement of the type bar was continuous, and
93 in the patent, page 2, commencing at line 47, where it is stated that after the finger stroke the "movement of the type bar is abruptly decelerated without, however, a distinct stoppage". When asked what the "abruptly decelerated" meant, he stated that the speed of the type bar had been decreased and that he would regard it as a control of that movement. Referred to the Going patent No. 1,908,140, page 5, commencing at line 44, where it is stated that "the type bar is slowed up as it approaches the printing position", he stated that he did not regard that as a checked movement, but to mean a controlled or decelerated movement.

"Q. What distinction do you make between controlled movement, decelerated movement, and checked movement? A. "Checked" as applied to this mechanism and as I see it in the Joerissen plate model—

Q. Never mind the Joerissen. I want your distinction without reference to that. A. I understand that it means positively stopped.

Q. What does the term "arrested" mean as applied to these mechanisms? A. I would say that it was stopped. The movement is arrested—it is stopped.

Q. That you would regard as a complete stop? A. Stop.

Q. I notice on page 5 of patent No. 1,908,140, this same patent that we have been discussing, and that same paragraph, beginning with line 44, that in line 55 it speaks of,

after the printing key has been arrested, the stored energy of the momentum accumulator effecting a noiseless stroke. Does that mean that you have arrested, stopped the type bar?

The Court. That applies to the printing key, does it not, to the arresting of the printing key?

Mr. Cushman. Yes, of the printing key or type
94 bar.

The witness. It would seem so.

By Mr. Cushman:

Q. Then, at least in so far as these machines such as are complained of as infringements, you would have an arrested movement of the type bar and not a continuous movement of that type bar? Is that correct?

The Court. I did not understand that. It does not say that the type bar is arrested. The printing key is arrested.

Q. What is the printing key? A. This (referring to chart) is the key.

Q. And the printing key moves this (indicating on chart)? A. Yes, it does.

Q. Then, this part (indicating on chart) of the type bar is slowed down? A. Yes.

Q. And decelerated? A. Yes.

Q. And this movement (indicating) must be momentarily, no matter how small it may be, checked at that point (indicating), is it not? A. No. You say that the printing key is arrested. The printing key is stopped here (indicating on chart) prior to the time of printing.

Q. So that its action no longer affects this (indicating on chart)? A. It no longer affects it.

Q. Then, this action having been suspended, there must be cessation of power on that? A. Direct power?

Q. For an instant. A. Yes, it would be decelerated, but it would not reach a stop. There is nothing to stop it.

95 Q. Now, in plaintiff's exhibit No. 8, being the Joerissen plate model, and in effect in all of these mechanisms, is it not a fact that following the action of the key lever to bring the type bar to its printing position, the final squeeze movement takes place so rapidly that it is practically continuous; one follows the other immedi-
96 ately? A. It would appear to be in sequence. It

would all depend upon the amount of initial pressure you put on the key, to overcome existing conditions, such as this spring member and the weight of the parts themselves, but as I operate this now, with a normal type stroke, I do not move that member 12. I have to apply additional force to do it.

Q. That, of course, would be a matter for adjustment so as to find the parts to get the motion desired? A. I do not doubt but what you could make it better than that.

Q. So that whether we refer to that as the type bar of the Going patent No. 1,908,140 as slowed down or terminally checked, in effect we have about the same thing, do we not? A. We do not.

Q. What difference do you make between terminal checking and decelerating or slowing down? A. By terminally checked I understand a definitely stopped movement. By decelerating I understand a gradual slowing down movement."

He said that Defendants' Exhibit H was made by him under Mr. Going's direction and that the attempt to apply the Joerissen actions had been made by Mr. Going and it was found to be impossible to apply the movements.

"Q. But if you took the Going patent No. 1,471,153 and the illustrations therefrom, would you have any difficulty in building that plate model (referring to Defendants' Exhibit C) from this illustration? A. I should imagine there would be a slight difficulty in finding centers and dimensions.

Q. But any skilled mechanic could build it? A. Build a plate model, not a machine.

97 Q. How would you build a machine embodying this? Could you do that? A. We would have to have a layout by a draftsman.

Q. A skilled draftsman would lay it out for you? A. Yes.

Q. Now, this Going patent, 1,471,153, shows single action, does it not? A. Yes, it does.

Q. That is true of the Joerissen patent here in suit, is it not? A. Yes.

Q. So that, working from either one of these patents, you would have to have a skilled draftsman, trained as an engineer, to develop those movements into a complete machine, would you not? A. I think you would.

Q. And I assume in the actual manufacture of typewriters that a trained engineer in this line would have no difficulty in building up from an operative action a complete machine, would he? A. He would know in a very short time whether it was operative as a complete machine, or else as a single action."

The witness stated that the Joerissen action could not be operatively mounted, in full complement, in a vertical segment machine. When asked if the Joerissen action, without departing from its principle, could be mounted in Defendants' Exhibit B, a horizontal segment machine, so as to bring the type to the platen, the witness answered:

"A. It involves considerable explanation. I have thought about it. We have here in this type of segment (indicating) a horizontal segment, a radial fulcrum. With this type of operating lever (indicating), the lever movements travel in the same plane in the bar, and so with the key lever.

98 It would seem to me that in the construction that you propose that, instead of it being a standard keyboard, we would have a circular keyboard of varying length of levers.

Q. But still we could mount—I am after the operativeness of the type bar and the toggle. A. None of its component parts.

Q. I understood you to assert that you could not mount this type bar and toggle in a standard typewriter? A. Yes, sir; of vertical segment construction.

Q. It could not be done? You do not think that any skilled mechanic could do it? A. I do not think so."

The witness stated that in his futile attempts to make a machine embodying the Joerissen invention, no attempt was made to get the assistance or advice of Joerissen as to how it should be built, this answer having been made over the objection of defendants' counsel.

"Q. Referring to the defendants' exhibit H, is that what you term in the typewriter art the vertical segment machine? A. This machine here is a vertical segment machine.

Q. What is the defendants' machine, plaintiff's exhibit 7? What type is that? A. Horizontal type.

Q. You had difficulty and were unsuccessful in applying the Joerissen invention to the vertical segment machine, defendant's exhibit H. A. Yes, sir.

Q. Did you make any attempt to mount that movement on a horizontal segment machine such as plaintiff's exhibit 7? A. No, we did not.

99 Q. Of course, that mechanism is capable of being mounted on machines of different types, is it not, the Joerissen mechanism as shown in these patents? A. Well, within the limits of the action, I would say."

Q. Now, in connection with the moving pictures which were shown here this morning, where did you take the pictures of the Remington-Rand machine such as is found in plaintiff's exhibit No. 7? A. That picture was taken in Ilion.

Q. What did Mr. Joerissen have to do with the taking of the pictures of his mechanism, plaintiff's exhibit 8? A. Mr. Joerissen operated the key.

Q. He just manipulated the mechanism for you? A. Yes, sir; just manipulated the mechanism.

Q. Do you know whether, in taking these photographs, the moving pictures, there was any attempt to have the same speed of movement of the two mechanisms that were photographed? A. Which two do you mean?

Q. The Remington-Rand mechanism of plaintiff's exhibit 7 and the Joerissen movement of plaintiff's exhibit 8? A. Only to this extent; that I informed both Mr. Freer and Mr. Joerissen that the motion picture camera was capable of arresting movement at any speed of operation, or not in those exact words but that is what I intended to convey, and that they could operate it faster than they were operating it.

Q. Well, that is not just the point. I want to know if you can state whether or not the speeds of the mechanisms which you have photographed and exhibited were the same speeds so far as key action is concerned, which is the initial action. A. You mean as comparing these two plate models with the Joerissen action?

Q. When we depress a key we depress it at a certain speed, don't we? A. Yes.

100 Q. What I want to know is, have you any idea as to the comparative speed with which the key lever and the mechanism operated thereby, as between the Remington-Rand model, a picture of which you showed, and the Joerissen panel, a picture of which you showed, the

comparative speeds of those movements? A. The operation of the Remington-Rand model was more a normal rapid touch operation, I should imagine, than that which was exercised on the Joerissen plate model.

Q. You cannot, of course, give us any exact statement as to whether the speeds were identical or different, can you? A. I cannot.

Q. That would make some difference in the films, would it not, whether the speeds were identical? A. It would not make any difference in the recording of time.

Q. Would it make a difference in the operation in the appearance of the mechanism? A. The relative speed of operation of the key and the relative speed of the exposures taken with the camera would show in a longer stretch of film, but the relative speed, the exact timing, would be registered on the time clock."

He identified the spring 60 shown in Figures 1 and 3 of Going patent No. 1,908,140 as being a resistor for the key lever 34 and as means for restoring the type bar movement and the rest of the linkage. He also found in Defendants' Exhibit E, an additional spring connected to the lever 86 which he imagined would serve to accelerate the restoration of the parts. In reference to the Joerissen construction, he considered the spring, such as is shown at 20 (Figure 3 of the drawings of the patent in suit) to have possibly two purposes, namely, to set up a resistance to the operation of the link 12 and also to act as a restoring member for the key lever.

101 Redirect Examination

The witness stated that every typewriter he had ever seen had springs in it.

With reference to Figure 3 of Going patent No. 1,908,140, he said that during the printing portion of the stroke, from the full line to the dotted line position, the direction of movement of link portion 90 is upward. As to 1921 noiseless portables as portrayed in Defendants' Exhibits
102 D-1, D-2 and D-3, the witness said that the direction of movement of the end of the lever arm pivoted to the type bar and extending between points 20 and 25 was downward from the position D-2 to the position D-3.

The witness stated that he knew of no machine, either of

horizontal or vertical segment type, in which it would be possible to install enough of the Joerissen type actions as shown in Figures 5 and 6 of the patent in suit, to make a complete machine. The witness said that the Remington Rand organization includes highly specialized experts capable of starting with one picture of one key action and designing and constructing a complete typewriter machine and that of these experts, he considered Mr. Going to be the most outstanding.

Recross Examination

With reference to the view he had expressed that the Joerissen mechanism could not be applied to any type of machine, the witness stated that he had attempted to apply it to but one type.

Mr. George G. Going was called as a witness on behalf of defendants, and being first duly sworn, testified as follows:

He stated his present occupation to be that of Chief Engineer of the Remington Rand Laboratories, that he is the patentee named in patents 1,908,140, 1,471,152 and 1,471,153, that he had been in the typewriter business since the year 1900 and was with the old Hammond Typewriter Company, the Royal Typewriter Company and Underwood prior to the time he went with the Noiseless Typewriter Company as Superintendent, and that thereafter his inventive ability took him to the position of Works Engineer of the
103 Company. He continued as Works Engineer until the Remington Typewriter Company bought out the Noiseless Typewriter Company.

He stated that the only successful noiseless typewriters that had ever been constructed worked on the principle of pressure instead of a blow, and that the first inventor, so far as he knew, was a man named Kidder, who made a noiseless typewriter with what was known as a cam action, but that it enjoyed no commercial success for the reason that the cam had to be pressed all the way down and extra pressure exerted at the bottom of the stroke to get any force against the paper, and that the action was very slow. He stated the next developer of importance to have been a man named Anderson, whose big contribution was the momentum accumulator and double toggle.

He said that the first successful commercial noiseless typewriter was put on the market, he thought, in 1914, by the Noiseless Typewriter Company, and that at that time there was no Noiseless Portable on the market. He first started development on a noiseless typewriter in about 1918, and that the Noiseless Typewriter Company placed a Noiseless Portable on the market shortly after 1920.

He professed familiarity with a publication called "Whispers", which was an organization paper of the Noiseless Company, and he identified an issue of the publication dated December, 1921, and found reference to a Noiseless Portable typewriter on page 12. The publication was entered in evidence as defendants' Exhibit K. The witness identified another copy of the publication "Whispers" dated April, 1922, and referred to a cut of the action of the Noiseless Portable on page 9, whereupon the copy was introduced in evidence as defendants' Exhibit L. He further expressed familiarity with a pamphlet marked "The Noiseless Portable Typewriter, Operating Instructions", bearing a notice "Copyright, 1922", and
104 stated that one of these accompanied each machine as it was sold. The pamphlet was entered in evidence as Defendants' Exhibit M.

He stated that some of these Noiseless Portable typewriters were sold in the years 1922 and 1923, and that in all, about six thousand (6,000) were marketed, these having been the same, or practically the same, as defendants' Exhibit B, made under Going patent No. 1,471,153. He found the serial number, which were consecutively applied, to be No. 3394 for defendants' Exhibit B.

He described the action of the 1921 Noiseless Portable to be an overhead momentum accumulator connected with a double toggle, and that double toggle is desirable, since the single toggle will lock and will not return to its normal position. The printing pressure he stated to be twenty-eight (28) pounds with a normal blow on one of the Noiseless Portable machines, and that according to his recollection there was a 9/16ths key depression, after which the accumulated momentum of the weight caused the printing by straightening out the toggles. The type bar was permitted to proceed after the arrest of the key bar by means of a slip connection. The witness found the customary

complement of springs in defendants' Exhibit D and averred that it was common practice to provide a number of springs to restore the parts to inoperative position.

The witness stated that there was no terminally checked throw of the type bar during operation of the 1921 Noiseless Portable, and by the term "terminally checked throw", understood a throw that was stopped. He said that such a movement would be very undesirable, since it would decrease the speed at which it might be possible to operate a type action.

He recalled that development work had been started by him on the mechanism shown in his patent No. 1,908,140, sometime in 1927, and that he had worked out the
105 type action at the time he moved to Stamford, in May, of 1928. He produced a model, which he stated had been made by him about six (6) months before he moved to Stamford, and that prior to the latter date, he had given it to his Company's patent solicitor. He stated that the model had not been changed in any way since first made, and that it embodied the essential features of the key and type actions of the present Noiseless Portable typewriter. The model was turned over to the Patent Department for the purpose of the preparation of a patent application. The model was offered and received in evidence as Defendants' Exhibit N.

The witness identified defendants' Exhibit F as a handmade model of the machine now known as the "Remington Portable," it being one of three (3) machines built by hand prior to commercial manufacture for test purposes. Defendants' Exhibit F was made shortly after May, 1928.

He stated that his patent No. 1,908,140, shows the type and key action used in the present noiseless typewriter, but was unable to state when the latter was put on the market commercially. As to commercial acceptance, he said it was impossible to fill all the orders at the present time for the present-day Noiseless Portable.

The witness expressed familiarity with the Joerissen patent in suit, and said that he had made a plate model of the action disclosed in Figures 5 and 6 of the patent. He had difficulty in using the identical pivot points and link elements disclosed in the patent, and was unable to produce an operative plate model without making some changes in

these particulars. He stated the principle of the action to be to drive the type bar to within a short distance of the printing point through key lever 1 and bell crank 6, where it is arrested by the links 30 and 31, a second push being then imparted by the pulling down of link 16 and
106 the turning of member 12 which carries the link 30.

Asked wherein he might find the disclosure of Figures 5 and 6 of the Joerissen patent in suit to be inoperative, he replied that using the vertical segment and the type bar traveling through 90°, it is impossible to get the parts in without conflict, that you cannot put two pieces in one place, and if it were possible to make some kind of typewriting machine with the structure shown in Figures 5 and 6 the result would be a slow operating device, since the type in that kind of machine travels 5½ inches to the printing point. The ordinary hammer blow machine is none too fast with the type traveling such a distance, and if there were any retardation of a bar traveling that distance, the action would be of no commercial value. In the Joerissen action, he stated that the type stops for an instant, then is carried through, and that the toggle has to break and be permitted to return, all of which takes time.

He stated that he had referred to a vertical segment, since that is the type shown in the drawing, and that it must have been a vertical segment or the fulcrum would not be directly below the printing point.

He said that the Underwood typewriter of 1926 was a different or distinctive type as compared to the Remington Rand typewriters before the Court, and that he had had made under his direction, for demonstration purposes only, a model containing the Underwood type of basket and segments, this being defendants' Exhibit H. He agreed that the model had been made for the purpose of demonstrating some of the Joerissen type actions as applied to the Underwood type of basket and segments, and that it was impossible to place side key actions in the model that would operate without interference with other key actions. He explained that a difficulty was, to begin with, that all the type bars as they approach the outside of the segment
107 have to be offset at a common center below what is known as the type guide, and that the links 31 being attached to those bars in offset position, it is impossible

for the bar to go by the links; further, that it also interferes with three adjoining type, and that the link 16 is standing in a plane above a common center and consequently would cross "at that point" and you could never get more than one in "that position" (i.e., in a plane above "this common center"). He said that it would be impossible for him to make changes in the model and to put in the necessary number of actions to make a complete and operative machine, and that he failed to appreciate how the Joerissen type action could be used in a complete machine of the Underwood type. He had never seen any complete machine embodying the structure shown in Figures 5 and 6 of the patent in suit, and had never seen any commercial machine in which that structure could be incorporated.

As to the 1921 Noiseless Portable and the present Remington Noiseless Portable, he found that, in both, the type bar had the same continuous flight from the time it starts until it prints.

The demonstration model previously marked Defendants' Exhibit H for identification was offered and received in evidence as Defendants' Exhibit H.

Cross Examination

The witness admitted that he had never attempted to adapt or apply the Joerissen mechanism to any machine except defendants' Exhibit H.

With respect to his reference to the continuous flight of the type bar in defendants' Exhibits B and F, he agreed that the type bar decelerates or slows down at some time during its movement.

108 He agreed that in the action shown in Figure 5 of the patent in suit, there was a continuous movement of the type bar to a position just in front of printing
109 position, and stated that the key lever is further depressed to push the straightened toggle forward rather slowly to the printing point, this being accomplished by the movement of link 15 and pull rod 16.

"Q. In the practical operation of these machines, would not the action of the pull rod 16 and the downwardly swinging link 15, properly adjusted and timed, pick up the type bar at the point where the key action left it, so as to give you practically a continuous, although a slow, down move-

ment? A. If you did not slow it down, stop it, you would not retard the stroke. You would have a common hammer-blow machine.

Q. That is true, but when it reaches its striking position just in front of the printing point it is decelerated, is it not, or checked? A. It is not decelerated; it is stopped.

Q. Well, checked, we will say. A. Stopped.

Q. And then is it not immediately picked up and carried forward with the squeeze stroke? A. If there is not a stop and a delay there, you will still have a noisy action. You must stop it and then press it in or you are not going to stop the noise.

Q. But does not one movement follow the other so quickly as to give you a practically continuous movement, with only an infinitesimal checking, with that mechanism? A. There must be the checking to quite a marked degree or else you will have a noisy action.

Q. In operating this movement of plaintiff's Exhibit E, when operated rapidly is there any marked checking of that? A. As I say, if you go through that with any degree of speed then you have a noisy action. If you go over here slow and push it in like that, then you do not."

As to what supplanted the type of machine, de-
110 fendants' Exhibit B, the witness replied that his Company did not have the facilities for manufacturing that machine, and its large machine at the same time, and that the three bank machine got out of fashion and he had to construct a four bank machine. He added that the machine, defendants' Exhibit B type, was not discontinued because it was unsatisfactory.

With reference to defendants' Exhibits charts D-1, D-2 and D-3, the witness agreed that the weight 19 starting in its position of rest, swings upwardly to its intermediate position, as shown in chart D-2, and finally swings to a still higher position, as shown in chart D-3.

"Q. Now referring to the mechanism in your own patent there, Mr. Going, 1,908,140, the weight 80 and the arm 86 swing from the center 89, don't they? A. Yes.

Q. And the toggle member 73 and the link pivot 82 swing from the center 75; is that correct? A. Yes.

Q. And this link pivot 84, swinging from that center and being beyond the vertical, moves downwardly, does it not,

from this center? A. Which is it you say moves downward, just that pivot point?

Q. Yes. A. Naturally.

Q. Moves from this downwardly? A. Naturally.

Q. The point 82, swinging from the center 75, when it starts from its position of rest, its initial position, since it is beyond the vertical, swings downwardly until it reaches the vertical, does it not? A. Yes, a few thousandths of an inch.

111 Q. And the portion 80, the momentum accumulator— A. Yes.

Q. —starting at this point, coupled to those two points, swings downwardly, does it not? A. It immediately begins to revolve around two centers.

Q. But its initial movement is downward? A. The back end of it begins to go down.

Q. Its initial movement is downward, is it not? A. Yes.

Referred to defendants' Exhibit E, plate model of Going patent No. 1,908,140, the witness stated that in the operation of the model, the momentum accumulator and its link start downwardly from a position of rest.

The witness stated that the action disclosed in his patent No. 1,561,450 was of the Anderson type, and that when the machine is operated from the position shown in Figure 2 to the position shown in Figure 3, the momentum accumulator 44 moves bodily in a plane slightly rising, until it gets about a third of the way when it begins to turn over, it has a slightly upward initial movement.

With reference to defendants' Exhibit N, the original specimen, from which Going patent No. 1,908,140 was developed, the witness testified as follows:

"Q. But from that model, as I understand it, and I assume from conferences or discussion with you, your solicitor was able to develop this structure? A. Oh, my gracious —he had all kinds of drawings besides that plate.

Q. Naturally; that is what I mean, conferences, interviews with you, drawings, sketches? A. He did.

Q. Did he have a complete machine built up from
112 that model? A. No.

Q. When you built the Going machine, which is, as I understand it, the present Remington noiseless, exhibit F, you laid out drawings, of course? A. Yes.

Q. Did you have any difficulty in starting with defendants' Exhibit F, the plate model, in laying out the necessary drawings and building up that final machine? A. I did not.

Q. Isn't that the way that most of these machines are developed, to get the mechanical movement and necessary parts for one action, and then lay it out finally into a complete machine? A. It is not my method.

Q. What is your method? A. My method is to see first if I can make an outside action work, or two outside actions side by side work. If they will work, I know I can get the rest to work.

Q. And this is an outside action, I take it? A. No, a lay-out of it. I say a lay-out of it. Not actually making the parts.

Q. But starting with a specimen like this, you would be able to lay out, would you not, a complete action? A. Yes.

Q. So that you would know whether it would work? A. Yes. I would be able to make a lay-out to see whether I could put it together or not, yes.

Q. Wouldn't that be true of almost any single action, that you could make a lay-out for the entire machine? A. Almost any that had gone through the patent office, but not all.

Q. Almost any that had gone through the patent
113 office? A. Yes, that had passed the patent inspection."

Redirect Examination

On examining Figures 5 and 6 of the patent in suit, the witness stated that he found therein no momentum accumulator, nor did he find one in the plate model. He said that he found nothing to take the place of the momentum accumulator, but did find a lever which is pulled down after the toggle is straightened to press the type against the platen, adding that he saw no similarity between that mechanism and a momentum accumulator. He explained that upon initial depression of the key lever, the arm 15 of link 12, Figures 5 and 6 of the patent in suit, does not move at all, but that after the type bar has reached a point where the toggle is straightened, the link 16 pulls down the arm 15-12 forcing the type bar toward the platen through the medium

of the straightened toggle and that the link 15-12 causes shifting of the toggle pivot point 11 toward the platen.

Recross Examination

"Q. Mr. Going, considering now the two mechanisms, the Going mechanism and the Joerissen mechanism, and let us assume that the type bar and the type head has been brought to position ready for making the final movement for printing, will you state whether or not you find in each mechanism means, regardless of what the means may be, for completing the movement of the type bar? A. Yes."

114 **Mr. Charles E. Smith** was called as a witness on behalf of defendants, and being first duly sworn, testified as follows:

The witness stated that he was a patent solicitor and expert in patent causes, that he had been employed in examination work in the United States Patent Office for seven years, that subsequent to that he was for some ten years in the office of one of the prominent lawyers in New York, where he personally handled the Underwood typewriter patent soliciting work and gave his opinions on litigated questions, and that for the succeeding thirty-five years he had been employed as the solicitor for various typewriter companies, soliciting patents, giving opinions on questions of validity and infringement, and also had been employed during that period in litigation work and in litigation before the Courts. That he had frequently had occasion to testify before the Courts as an expert in patent matters; that for the past thirty-five years practically all of his time had been devoted to soliciting typewriter patents, computing machine patents, and allied matters, relating either directly or indirectly to typewriting machines and computing machines and that during that period he had prosecuted applications on the Densmore machine, the Caligraph, the Monarch, the Smith Premier, the Brooks and the Remington among others and that he was thoroughly familiar with all of the various typewriting machines which had been referred to during the trial of this cause.

He stated that he was familiar with the Joerissen patent in suit and with its prosecution in the Patent Office as an application, and that he was thoroughly familiar with the

prior art set up in defendants' Answer. Defendants' Exhibits D-1, D-2 and D-3 had been prepared under his general supervision and accurately portrayed the same structure as patent No. 1,471,153. Defendants' Exhibits D-1, D-2 and D-3 were offered and received in evidence.

The witness further identified Defendants' Ex-
115 hibits O-1, O-2 and O-3 as showing, respectively, initial, intermediate and final positions of the type action shown in Going patent No. 1,471,152. Defendants' Exhibits O-1, O-2 and O-3 were offered and received in evidence.

Defendants' Exhibits G-1, G-2 and G-3 were offered and received in evidence and were identified by the witness as accurately portraying the essentials of the structure disclosed in Going patent No. 1,908,140.

He also identified a chart, Defendants' Exhibit P, then offered and received in evidence, as being in his belief an actual photostatic reproduction enlarged four times, of Figures 5 and 6 of the patent in suit.

The witness was referred to a further chart (Defendants' Exhibit S) purporting to show the Joerissen action in a position wherein the toggle is straightened to check the type bar prior to printing movement, and stated that this chart was made under his supervision. He pointed out, however, that this chart showed the parts in an impossible condition, since the pin which works in the slot of the lever 33, is shown in the drawing as being out of the slot. This would be an impossible condition, he said, because the pin would jam there and never permit the type bar to attain that position in accordance with the showing in the patent itself. He considered that Figures 5 and 6 of the Joerissen reissue patent do not correspond, because the draftsman, after preparing Figure 5, had evidently found it was impossible to move the parts through to the completed writing position, and had stretched or elongated certain of the parts and faked the drawing, in order to get it in, in order that it could reach that position. The drawing in question had been made up using the same length of linkage as shown in Figure 5, as the witness recalled, and actually the pin could not get out of the slot, so that,
116 consequently, the type bar would never reach the

position indicated in the drawing, because it would be blocked by reason of the pin engaging in the slot in the lever 33.

The witness stated that the Joerissen model, plaintiff's Exhibit 8, does not correspond strictly to the mechanism shown in Figures 5 and 6 of the Joerissen patent in suit.

He identified a drawing in two colors which he had made up to show the differences embodied in the model over and above the representation in the drawings in that case, the representation, as of the drawings of the patent in suit, being colored green, and the changes made in the model being shown in pink. The common point started with was the pivot of the member 12-15, this point being indicated in some of the other views by the reference numeral 13. The drawing of the Joerissen model, plaintiff's Exhibit 8, was taken from a photostatic copy of the model and reproduced from that. In the two color drawing, the witness considered that no other centers except the common center 13 corresponded, and the said drawing was offered in evidence as Defendants' Exhibit Q.

Three photostat copies of the Joerissen plate model were offered and received in evidence as Defendants' Exhibits R-1, R-2 and R-3, showing the parts, respectively, at rest, fully operated, and at an intermediate position. An exception was reserved by Plaintiff's counsel to the introduction of the colored diagrams and drawings.

The chart of the patent in suit showing the parts moved to position wherein the toggle is straightened to check the type bar prior to printing was offered and received in evidence as Defendants' Exhibit S, and the same character of exception was reserved by plaintiff's counsel.

The witness stated he first became familiar with the mechanism of the Going patent No. 1,908,140 on May 3,
1928, and that the plate model, Defendants' Ex-
117 hibit N, was given him by Mr. Going at that time.

He testified further with regard to these matters until an objection was raised by counsel for plaintiff as to the pertinency of establishing developments in 1928 by the party Going. Thereupon counsel for defendants stated that in the bill of complaint there was some question raised as to a disclosure of the invention from Mr. Joerissen to Mr. Going and attorney for plaintiff stated as follows:

"Mr. Cushman: That has been withdrawn".

Counsel for defendants then stated that if that had been withdrawn it was completely out of the case and the earlier models would not be gone into.

The witness stated that the effect of the prosecution of a patent application in the Patent Office frequently determined the scope of the claims, and was asked whether or not in his opinion the claims of the patent in suit had been restricted to the precise means shown by reason of those proceedings. Objection was made, and sustained, by plaintiff's counsel, to such a line of questioning, on the ground that the witness would be attempting to usurp the province of the Court in attempting to determine the legal effect of the Patent Office proceedings which were a matter of record, and an exception was noted by counsel for defendants.

The witness then briefly discussed patent No. 567,241, to Kidder, dated September 8, 1896, and stated a longitudinal and thrust type bar was employed and connected to toggles 2, 4, actuted by a lever 9 through a link connected to the key bar, the member 9, which is pivoted at 10, moving downwardly and rearwardly as the key lever is depressed. Referring to Figure 4 of the patent he stated that the modification shown there is a toggle which breaks upwardly instead of downwardly as in the other figures, and explained that he meant that it moves upwardly instead of
118 downwardly as it straightens.

Referred to Anderson patent No. 1,261,752, he pointed to a momentum accumulator 23 which actuates the toggle linkage 12-15 by which the type bar is actuated after the key lever has been arrested in its downward movement and stated that the initial movement of the link 22 which is connected to the forward toggle 15 is downward and rearward.

Counsel for defendants then referred the witness to Going patent No. 1,289,731 of December 31, 1918. An objection was made by counsel for plaintiff on the ground that this patent had not been set up in the Answer and could only be used, therefore, to show the Court the state of the art. Questioning relative to this patent was dropped with the remark by counsel for defendants that the patent, of

course, was still of record although all testimony with respect to it was withdrawn.

Referring to Anderson patent No. 1,312,821, the witness, referred to Figure 2, pointed to a pull link 82 connected between the key lever 16 and an angular lever 81, the arm 80 of which coacts with the lever 71 pivotally connected to a link 36 which in turn is pivoted to a toggle member 32, the other toggle member 30 being connected to the type bar. He further pointed to a momentum accumulator 47 connected to the linkage, the purpose of which is to transmit an upwardly breaking movement to the toggle to bring it into a pressing action against the platen by straightening the toggle and effecting a pressure imprint, the straghtening of the toggle giving a decelerated movement to the type bar as the straightening condition of the toggle is approached. The type bar he found to be pivoted as distinguished from the earlier Anderson patent previously discussed which had an end thrust type bar. He described the segment shown in Anderson patent No. 1,312,821
119 as being a flat segment in which the type bars are pivoted in a substantially horizontal plane or in a plane which is at right angles to a tangent to the platen at the printing line as distinguished from a so-called vertically disposed segment in which the plane of the pivots of the type bars is in a plane coincident with or at a tangent to the platen at the printing line, adding that the Underwood machine has the so-called vertically disposed segment.

The witness was next referred to Going patent No. 1,471,152 and Defendants' Exhibits O-1, O-2 and O-3. He described the mechanism therein shown as comprising a key lever coacting with an angular lever substantially U-shaped to actuate it and transmit motion to a pull link 16, the link being connected to the type bar 9 which is pivoted at 10. Toggle links 23 and 24 are pivoted respectively to the type bar and to an anchor point on the segment. Link 24 is connected through a link 31 to a lever which carries a momentum accumulator 29. After arrest of the key lever, as shown in Chart O-2, " * * * there is an independent motion of the linkage which I have previously referred to, to bring about a straightening of the toggle members 24, 28, which in effect causes during the straightening of

the toggle a decelerated motion of the type bar, slowing down its motion until the final imprint is effected as a pressure imprint as distinguished from a hammer blow. This motion is brought about by the operation of the momentum accumulator 29, after thekey lever has been arrested.

The motion is entirely independent of the key lever and the momentum accumulator with its acquired momentum brings about a straighening of the toggle, and the pressure imprint is effected as shown in defendants' Exhibit O-3."

The witness was asked whether or not the claims of patent No. 1,471,152 cover the mechanism of the present noiseless portable machine and upon objection of counsel
120 for plaintiff that construction of patent claims was outside the province of an expert witness, the testimony was excluded.

The witness was then asked to read the claim he considered to be broadest in patent No. 1,471,152 and to point out the claimed elements as they applied to the patent disclosure. He thereupon applied claim 1 of the patent to the patent drawings. The witness was then asked to refer to the present Remington noiseless portable construction shown in defendants' Exhibit G-1 and to point out which elements of claim 1 of patent No. 1,471,152 were found in chart G-1. Objection was made to this by counsel for Defendants on the ground that it was immaterial whether or not the claim reads upon the present construction inasmuch as the question in issue was whether the claims of the Joerissen patent read on the present Remington noiseless portable as shown in Chart G-1. Counsel for defendants replied that he wished to point out to the Court through the witness the fact that defendants' present construction is made under their own patents and is not made by reason of that under the Joerissen patent, and the evidence was admitted. The witness then applied claim 1 of Going patent No. 1,471,152 to the structure shown in defendants' Exhibit G-1.

He found that in Exhibit G-1 the type bar 13 has no different kind of motion than the type bar 9 of patent No. 1,471,152 and that in both instances the toggles are downwardly breaking. In both instances the force of the key lever goes directly by linkage to the type bar as distinguished from going to some other portion of the mecha-

nism. As regards the direction of the movement of the momentum accumulators he stated the distinction between the two constructions to be that in the case of the Going patent No. 1,471,152 the movement of the momentum accumulator 29 from its normal position is generally upwardly directed, whereas in the case of the Remington noiseless portable machine as shown in Defendants' Exhibit G-1, the momentum accumulator has a generally downwardly and rearwardly directed motion. In both disclosures the momentum accumulators have an upwardly swinging motion during the terminal portion of the movement. The witness stated that Going patent No. 1,471,152 was not applied by the Patent Examiner against the claims of the Joerissen patent.

121

Counsel for defendants then referred to Going patent No. 1,760,641 not set up in the Answer and having a later filing date than the Joerissen patent in suit for the alleged purpose of showing that the said Going patent has a broad claim which covers the initial downward movement of the momentum accumulator. Objection was made by counsel for plaintiff on the ground that the patent was entirely irrelevant, and the objection was sustained and an exception noted.

The witness testified that he had handled the Going applications since about 1924 and that the Patent Office had never declared an interference between any of the Going applications and any Joerissen application. He agreed that the same Primary Examiner has charge of all pending applications relating to typewriter key actions and that if any two inventors have substantially the same invention they are placed in interference by the Examiner who may even go so far as to formulate himself a claim to cover the common subject matter. He inferred that since no interference had been declared between Joerissen and any of the Going applications that there was no common patentable subject matter.

As to the term "terminally checked throw" found in the claims in suit he understood that term read in the light of the Joerissen specification and record clearly means a positive arrest before the type bar reaches the printing position. He found no such terminally checked throw in the present Remington noiseless portable typewriter.

122 He considered such a terminally checked throw to be shown in Going patent No. 1,615,694, wherein the type bar 15 is checked or arrested by a pad 19 before it reaches printing position, the stroke being then completed by the action of a momentum accumulator 30 which straightens what is in effect a toggle 26, 28 to bear on the type bar and effect a pressure imprint against the resistance of the pad 19. He agreed that the type bar 15 has a 90° throw apparently like that of the Joerissen patent and that the machine was of a vertical segment or Underwood construction. He found no conflict between the members 28 and 26, since there is but one of these toggles for cooperation with all of the type bars. This construction was never put into commercial production.

In Going patent No. 1,615,835, the witness found that the type bar 15 was again terminally checked by the pad 19 and then cammed into printing relation by the roller 30 on the end of a lever 28. He found similarity between this action and the Joerissen action since in both instances there is a pressure imprint effected after the type bar has been arrested just forward of the platen. He stated that the construction was never used commercally but considered that it might be made to work since theoretically it is entirely operative.

The witness stated that in connection with his work as patent solicitor for the Remington and the Remington-Rand Companies he was in close contact with the development departments of those organizations.

In the Remington noiseless portable machine he found no equivalent for the member 12, 15 of the Joerissen patent and no equivalent for the link 16 of the Joerissen patent.

The witness commenced to testify with respect to a list of patents taken out by George T. Going whereupon the following statement was made:

"Mr. Cushman: May I address the Court?

123 We are perfectly willing to admit that Mr. Going has done a great deal of inventing in the typewriter art. The records of the Patent Office will show that, but I can not see the pertinency of merely loading this record with a statement as to what Mr. Going has done by way of taking out patents.

The Court: In view of that admission as to his past record, I think it is unnecessary to go any further."

The witness said, over objection, that he thought the most outstanding inventions made by Mr. George G. Going were the 1921 portable noiseless as disclosed in Defendants' Exhibit B, the standard four-bank noiseless machine and the present four-bank noiseless portable.

Referred to Joerissen claim 23 specifying "a type bar pivoted for a forward and rearward operative swing", the witness said that would mean, as read on the Joerissen patent, an upward and rearward swing as embodied in the Underwood typewriter where the type bar travels through 90°. He stated that in the Remington noiseless portable as illustrated in Exhibit G-1, the upper end of the type bar moved in a substantially horizontal arc from rest to printing position. While it has an extent of upward movement which is very slight, the witness would not say that it was upward and rearward swinging in the same sense that it defined or readable in the Joerissen construction and agreed that it also moves down.

The witness identified member 12-15 of the Joerissen Reissue patent as being "a swingable link portion having a pivotal connection with the other of said toggle members" as recited in claim 23. He said that he found no equivalent element in the Remington structure, Defendants' Exhibit G-1.

Referring again to Defendants' Exhibit G-1 the witness testified that the key bar is not operable to move the toggle
members to a relatively straightened position and
124 to impart to the type bar a terminally checked throw
to a position slightly in advance of striking position,
125 explaining that there is no checked motion in the
Remington construction such as is called for by the terms of the claim (23 of the patent in suit) but there is a decelerated motion of the type bar which slows it up due wholly to the fact that the toggle members 70 and 73 in Defendants' Exhibit G are approaching a straight line position, the actual pressure imprint being effected during this decelerated motion of the type bar due alone to the straightening of the toggle.

As to "means thereupon effective to operatively swing said link portion to complete the stroke of the type bar through said toggle" the witness considered that there could be no such corresponding means in Defendants' structure since if there are no checking means there could

be no means effective after the checking to operatively swing the link portion to complete the stroke of the type bar through the toggle.

He expressed familiarity with the remaining claims in suit, Nos. 24 to 28, and stated that all the elements found in claim 23 are also included in claims 24 to 28, although the latter may have additional limitations in them.

Upon production of a drawing prepared under the witness's direction and subsequently entered as Defendants' Exhibit T, the drawing showing in three different positions a portion of a type action such as is shown in Exhibit G-1, Fig. 1, representing the parts in a position of rest, Fig. 3 an intermediate position and Fig. 3(a) the final printing position. The witness identified a link portion 90 colored red and stated that the part accurately portrayed the movement of link 90 during operation of the Remington noiseless machine, and stated that generally speaking the link portion has generally an upward swinging movement around the pivot 84 from its initial position to its final position.

126 *Cross Examination*

The witness submitted it to be true in the main that a Patent Office drawing is not taken as a working or engineering drawing.

A line of questioning was begun with reference to Defendants' Exhibit Q, purporting to show the discrepancies between the Joerissen patent drawings and the plate model, Plaintiff's Exhibit 8, but this line of questioning was dropped when the Court stated that practically no weight was being given the testimony in regard to this colored chart.

Referred to Figures 5 and 6 of the patent in suit, the witness said that in his opinion a skilled engineer could not make an operative construction from these drawings without experimentation; that he would have to experiment in order to determine what points to put in for the fulcrums and what construction to make there to enable it to operate in the manner intended. He admitted that the engineer should not necessarily blindly follow the Patent Office drawing, but added that if the design as shown in the drawings is inoperative and he has to experiment in order to determine how to make it operative, it is an entirely dif-

ferent question and not within the province ordinarily of an engineer.

He admitted that the principal features of the Joerissen patent in suit as disclosed in Figures 5 and 6, these features being the key bar, the type bar, the toggle, the swinging link member 12, 15 and the pull rod 16, are all found in the model, Plaintiff's Exhibit 8, but stated that they are not embodied in it in the same form that they are disclosed in the patent. He admitted that the plate model operates, but did not think it operated as a noiseless machine or as a noiseless type action should or would.

127 The witness was then questioned as to the mode of operation of the structure disclosed in Going patent No. 1,471,152 with particular reference to Figure 3.

He found that the direction of movement of points 29 and 32, these being respectively the momentum accumulator 29 and the pivot point between the link 31 and the toggle, move upwardly and rearwardly from a state of rest. He stated that there was no arresting of the type bar, in the sense of stopping it, in its movement from the rest position of Figure 1 to its printing position. His attention was directed to page 2 of the specification of the patent (1,471,152) paragraph beginning line 104 wherein it is stated that weight 29 is positively but resiliently arrested and said "that merely means that a provision is made for preventing an overthrow of the toggle beyond its straight line position, so as to limit the motion of the toggle and prevent it from breaking beyond the straight line position." As to the statement in the said paragraph that "the edge 38 is brought silently into engagement with the stud on cushion arm 37 just prior to the consummation of the printing", the witness said:

"A. That means what I have explained before, is to prevent an overthrow of the toggle and to resiliently bring about that limitation at or about the time of the printing stroke.

Q. If you do that, don't you necessarily have an arresting of that just prior, as the patent states, to the consummation of the printing? A. No, sir, you do not, due to the resiliency of the arm which carries that. If it positively arrested it, then the type bar could never reach the printing position.

Q. Regardless of whether it positively arrests it or not, do you mean to say that the resilient arm is an idle thing and does not in any way arrest the movement just prior to the consummation of the printing? A. I don't
128 say that it is an idle thing at all. In this particular action it is required to prevent an overthrow of the toggle primarily.

Q. But you deny that it would have any arresting movement, is that it? A. I don't think it would arrest the type bar at all. If it did, it would prevent the type bar from printing."

Referring to Going patent No. 1,471,153, the witness said that the movement of weight 19 and the pivot 20 was upward and rearward from the rest position.

In Defendants' Exhibit G-1 the witness found the momentum accumulator 80 and the connections between it and the type bar to be means for completing the printing stroke after cessation of the action of the key lever, but he found no such means, effective after the cessation of the downward motion of the key lever, in the Joerissen construction.

He found that in the Joerissen machine the rod 16 pulling down on member 12-15 is supposed to effect the completion of the stroke, as stated in the patent.

With reference to defendants' Exhibit T the witness admitted that there would be a very slight motion of bodily movement of the pivot 82 around the center 75 moving from rest position and said he would say that the pivot 84 had a slight upward motion in the first part of its movement around the pivot 89 and then afterwards a slight downward motion.

Questioned as to Kidder patent No. 567,241, the witness said he understood that the stroke was not arrested, but continuous, the motion being decelerated as the elements of the toggle come to a straight line position, the ultimate squeeze being obtained by the straightening of the toggle and being adjustable by means of the set screw on the hanger from which the link is supported. He did
129 not think that the Kidder machine was ever put on the market in the exact form shown in the patent.

"Q. Referring now to the Anderson Patent 1261752, which you discussed this morning, and considering the momentum

accumulator 23 as shown in Figure 1 and the arm 24 by which it is carried, state what the movements of those parts are from their position of rest. A. The momentum accumulator 23 receives an upward and rearward movement. The lever 24 to which counsel has referred receives a movement at its upper end, where connection is made with the momentum accumulator, around a substantially horizontal short arc. Its movement in the first instance would be upward, and then after about one-half of the movement it would have a downward tendency.

Q. Referring to the Anderson Patent 1312821, and particularly to the momentum accumulator 47 as shown in Figure 1, and the link, 36, these parts being shown in position of rest in full lines and in intermediate and final positions in dotted lines, what is the general direction of the movement of those parts from their positions of rest? A. The momentum accumulator 47 would have, in the first portion of its motion, an upward swinging movement around in a substantially horizontal arc. The second half of the motion would be in a downward and rearward direction. As to the link 36 to which counsel has referred, this link would receive an upward and rearward movement during the printing operation."

The witness concluded by stating that he was still in the employ of the defendant Remington-Rand and that for thirty-five years he was either the counsel for Remington-Rand or its predecessors or was in the employ of counsel. At this point the following were offered and received in evidence as Plaintiff's Exhibits:

130 An enlarged chart of Figures 5 and 6 of Joerissen's Reissue Patent No. 19,076, as Plaintiff's Exhibit 11.

An enlarged chart of Going patent No. 1,908,140 as Plaintiff's Exhibit 12.

An enlarged chart of Joerissen patent No. 1,856,340 as Plaintiff's Exhibit 13.

A diagram of movements of toggle elements found in Going patent No. 1,908,140 as Plaintiff's Exhibit 14.

Reguttal Testimony for Plaintiff.

Carl A. Joerissen called as a witness in his own behalf, having been first duly sworn, testified as follows:

Mr. Joerissen stated he was the plaintiff in this suit and the inventor of the machine shown in the patent involved. He said that he first entered the typewriter business at the age of 18 in the Remington factory in Ilion, New York, and thereafter worked for several years in Remington's Service Department, leaving the Remington Company to enter the employ of the Underwood Typewriter Company in 1898 and resigning in 1928 on account of ill health. He had had typewriter experience as an expert mechanic and sales manager for forty years.

The witness stated that he had made up a single action model of the mechanism shown in Figures 5 and 6 of the patent in suit and that the action was operative and would also work in a whole machine. He identified plaintiff's Exhibit 8 as embodying the invention shown in the patent and as having been constructed on his order.

"Q. It has also been asserted in testimony here that it would be impossible to take a plurality of these actions and mount them in a typewriting machine and pro-
131 duce an operative machine. What have you to say about that? I heard some of the testimony, and I was very much surprised that any one would try to put a machine like this into a vertical segment.

He identified Defendants' Exhibit H as having a vertical segment and stated that the better form to use would be a horizontal segment, very similar to what is being used in any noiseless typewriter.

As illustrating the feasibility of applying a Joerissen action to a typewriting machine, the witness stated that he had had a diagrammatic drawing made in order to give an idea as to just how the bars are to be placed in the machine, stating that there was no difficulty with that at all. He referred to the drawing, later offered and received in evidence as Plaintiff's Exhibit 15 and identified therein three actions such as shown in Figures 5 and 6 of the patent in suit. He stated that each type bar has to be made in accordance with its position in the machine, the conditions governing the type bars at the end positions being different from those governing the type bars at the center positions and that when the key lever is far from the type bar as at the end keys, a bend of link is used in order to compensate

for the distance. He explained that the type on the end bars has to be beveled whereas the type in the center is straight. The various levers which operate the type bars work in a half-moon he said, and that at the end, the lever would probably have to be slightly twisted or bent in order to make it permanently parallel with the key lever, this being in the province of the mechanic, the same thing applying to the link connecting the type bar with the key lever. As to the building of a typewriter, it is an engineering and then a mechanic's job, and he considered it unnecessary to set forth the exact form of each
132 of the actions in a particular set up.

The witness' attention was directed to the patent in suit, page 1, lines 78 and 79 where it is stated that the invention is embodied in the key action of substantially the type employed in the well-known Underwood ma-
133 chine and explained that the Underwood principle is the front stroke machine where a type bar prints on the side of the cylinder instead of on the lower portion or on the top as done by others. Underwood developed the front stroke, and most front stroke machines are said to have the Underwood principle.

The witness said that he had taken out probably a dozen patents in the typewriter field and that when he was with the Underwood Typewriter Company he was consulted on all development work, particularly from the sales standpoint but also from the mechanic's standpoint as to whether it would stand up and whether it was useful and had any sales value.

Referring to Defendants' Exhibits R-1, R-2 and R-3, he described a stop positioned in one of the holes on the disc and stated that the stop was a timing device which insured that one movement will take effect as soon as the other is completed.

He said that the early movement occurs when the key is depressed and the link portion actuates the type bar and straightens the toggle and that as soon as that movement is completed and before there is any hesitation, the link portion moves downwardly and rearwardly in order to complete the stroke. There should be no hesitation between the first and second movements. The second movement is a slow movement while the first is a very rapid

movement, this being the mode of operation of all noiseless constructions.

The drawing showing three actions was offered and received in evidence as Plaintiff's Exhibit 15.

Cross Examination

The witness was referred to the patent in suit and stated that prior to filing the application for that patent he
134 looked over the drawings and specifications, that the location of the fixed pivot point 5 which is the pivot point for the type action is shown in the same position used at that time in the Underwood vertical segment machine, a position directly below the front face of the platen, and that the action shown in the patent drawings, Figures 5 and 6, was one of the actions along the center of the machine. He said that he had no model or machine showing a side key action, that he could have one built showing the side action, but that it would not be much different from one of the center actions. He said that he had built complete machines but he never built a complete machine embodying the structure shown in the patent in suit and had not done so for the reason that he found that several parts could be eliminated and accordingly, he did not want to make a complete structure exactly as shown in the patent, since it was easy to eliminate some of the parts.

He stated that he was not particularly familiar with reading the drawings of patents. His attention was called to the drawing, Plaintiff's Exhibit 15, made under his instructions and he said that it fairly represented the embodiment of key actions of the type shown in his patent, Figs. 5 and 6. His attention was then called to the fact that in his exhibit the head of the key in a rest position is not down nearly as much in a reclining position as in the patent, and he explained "It is not necessary to put it down as far as that. I happened to set the type bar basket down lower in the model, but it is unnecessary to have that much more key action, and therefore in building a large model you would not want to increase the dip of the lever any more than was necessary".

He was asked whether or not the head of the type bar in the drawing, Plaintiff's Exhibit 15, is below link 31 as in Figure 5 of the patent drawings and said: "As I
135 just explained it to you, there is no use for that type

bar to travel a half an inch further than is necessary and increase the dip of the key lever if you were making a large model machine. You could do that on a small model in order to demonstrate the action, but if you were going to make a large model you could make a modification of it."

"Q. Possibly we can shorten this, Mr. Joerissen. Is there any claim made that this drawing that you brought in here corresponds in any way or uses or shows the adaptation of the key action as it is shown in your patent into this drawing that you have brought in here? A. It certainly does.

Q. And yet you have not shown the key action, as I understand it, as it is shown in figure 5, with the toggle members 30 and 31 in a relatively straightened position downwardly, with the head of the type bar down below the toggle member 31. That is true, is it not? A. Yes. That can be done in that way, but it is unnecessary. You do not do it in your machine either.

Q. No, Mr. Joerissen; possibly we misunderstand each other. A. The corrections that are made there any ordinary typewriter mechanic would know enough to make them himself.

Q. Would you be kind enough to show me all of the corrections that you made there, explain to the Court what they were? A. The only corrections that I made were that I showed further putting in of these type bars and the cylinder, which is a separate unit from the base of the machine and is adjustable forward and back. The only thing that was done was to move that slightly back in order to take care of the layout of the whole machine.

Q. You moved the platen? A. Yes.

136 Q. With respect to the— A. To the carriage.

Q. —the carriage and the segments; is that correct? A. Yes, with respect to the segment.

Q. You moved it with respect to the segments? A. In order to get the full layout, yes."

The witness stated that he had never examined the 1921 noiseless machine and in 1926 was not familiar with its type action and did not know what type of segment was used. He was not familiar in 1926 with a typewriting machine having a horizontal type segment with a pivoted type bar and a front stroke but had been familiar with the old large Noiseless and the Wellington, both of which were horizontal segment machines of the plunger type and agreed that there is

quite a distinction between the pivot and plunger types of machines.

"Q. Mr. Joerissen, if you were not familiar with the early Noiseless portable, and did not know of any other typewriting machines having a horizontal segment with a pivoted type bar, on a front strike machine, in 1926, how is it that you state that your action as shown in your patent, your action at that time, was intended to be used on a horizontal segment machine? A. I did not say that I was not familiar with any machine having a horizontal segment. I said that the Wellington and the large Noiseless had what was equivalent to a horizontal segment, where the bars all came out and struck in, and it makes very little difference whether they were pivoted or thrust, because they had pivots underneath which regulated that thrust.

Q. As I understand your previous testimony, you have stated that anyone would be foolish to try to put your type action on a vertical segment machine. Is that correct? A. Yes, sir, that is right.

Q. In other words, my understanding is, then, that your type and key action will not work when you use it on
137 a standard Underwood segment and basket? A. It
138 is not intended to be put on a standard Underwood, but you could make changes in any mechanism, I suppose, and have it work, but I mean that just as it stands it was not intended for that.

Q. And it will not work, will it? A. No.

Q. You can not put it in? A. No, not on a vertical segment, but there was another old machine which I forgot to mention, the Barlock, one of the first ones to have a horizontal segment, you might say, although it printed on top of the carriage instead of on the side.

Q. In other words, it was not a front-strike machine, was it? A. No, not exactly the front strike, because it printed on the top instead of on the side of the machine."

As to the position of the pivot point 5 of one of the central actions, it would be necessary to move the type action shown in Figs. 5 and 6 of the patent in suit to the left, or else move the platen to the right relative to the type action and all typewriters have movable cylinders that can be moved forward. He stated that the cylinder would have to be moved back possibly half an inch. He thought that the radius of a horizontal segment that might be used with

his type action would probably not be more than half an inch to an inch although he had not carefully studied that point. He did not know what the radius of the Remington noiseless portable segment was. He was unable to say what particular radius had been used in making the segment in the drawing, Plaintiff's Exhibit 15, stating it was merely a diagrammatic view and no attempt had been made to work out an accurate radius. He had no plan views of his construction and none were used in the preparation of the drawing, Plaintiff's Exhibit 15, which was prepared
139 from the patent drawings.

"Q. How did you decide where and how to locate those side or end actions? A. I located them where I thought they should be.

Q. In other words, you just guessed at it? Is that correct? A. It is not a working drawing. As I said before, it is simply to show you just how I proposed to arrange the type bars to actuate the mechanism.

Q. Did you do the same thing in the location of the various centers and fixed points, guess at where they should be? A. I did, in an approximate view of what we proposed to do."

Q. And you made no attempt in this drawing, Plaintiff's Exhibit 15, did you, to keep the lengths of the various parts either the same or proportionately the same as the lengths of the parts as shown in your patent drawing or in this plate model, Plaintiff's Exhibit No. 8? A. Well, as I think I said yesterday, there are no two type bars of any action arranged exactly identical. There is a different condition which governs every type bar on a typewriter, and there always will be, and the only way to do it is to approximate it and then make it into a model and get your angle correct.

For instance, this is a link that actuates the type bar; it is link 6. You may be obliged to bend that link in this position (indicating), and you may be obliged to bend it in a smaller radius, but there is no way of getting it absolutely until it is actually put into a machine.

In making the Underwood, we had our best engineers and we found out that we had to readjust this pivot in order to have the same stroke for every single type bar, and
140 there had to be tools made to adjust that in order to get a 7/8 inch dip of lever 1, and it is the same way in building a typewriter. You probably know with yours

that those parts have to be fit and tried. You can approximately lay it out, but I believe that when you have had that experience—for instance, Mr. Going built a model about 1928, and it was about 1931 when he brought it out. It is a job.

The attention of the witness was called to his diagrammatic drawing, Plaintiff's Exhibit 15, and he agreed that the key and type action appearing to be closest to him approximated the assemblage of a center action and also agreed that the action shown in Plaintiff's Exhibit 8 and in Figs. 5 and 6 of his patent is also a center key action. He was again referred to Plaintiff's Exhibit 15 and asked if the toggle member 30 was not a great deal longer than the toggle member 31 and he stated that it was possible but that the links of a toggle have very little to do with it.

"Q. I am asking you if in this drawing the toggle member 30 does not appear to be a great deal longer than the toggle member 31. A. I will have to look it up. I do not know whether it is or not.

The Court. I think it is apparent from the drawing. I do not think that it needs the testimony of the witness to prove that.

By Mr. Bean:

Q. Then, Mr. Joerissen, was any attempt made at all to make the lengths of these parts the same or proportionately the same in the model, Plaintiff's exhibit 8, or in the drawing of your patent? A. No, I do not think there is anything mentioned in the patent which says that you must have the same lengths."

141 He identified in Plaintiff's Exhibit 15 in the type and key actions which appear to be furthest from him the key lever pivoted on the pivot 2 and having a connection with the bell crank 6 pivoted on the bar 7. On the end of the bell crank he found an upturned ear portion carrying a dog or pivot. The type bar 4 is pivoted in a slot in the segment on an arc-shaped pivot which goes through the whole segment. The type bar from its head down to the heel is a flat piece of metal with the exception that on these end actions the type face are bevelled so that they have a straight contact with the platen at the time of printing. He did not know whether the dog or pivot point in the bell crank 6 which has the purpose of causing the operation of the type

bar, must of necessity move in a path or plane that is at 90° to the platen, but stated that it moves in the same plane in which an ordinary Underwood action moves. He stated all of the end bars have to bend enough in the links or bell cranks and said the pivot bar 7 appeared as if it might be in a plane parallel to the platen of the typewriter and that he thought it should be.

"Q. If the pivot bar 7 is in a parallel plane to the platen of the typewriter, and around that pivot bar 7 the bell crank 6 is rotated, must not the half of that bell crank 6, each portion of it, be in a plane at a 90 degree angle to both the platen and the pivot bar 7? A. It would be in a slightly different plane, possibly, the same as it is in an ordinary Underwood. It would be in a different plane, but that pivot is a loose pivot, and has plenty of play in order to move the part into action without any hindrance to the operation.

The witness estimated that, on the end key action, element 4 travels at an approximate angle of 60° in reaching a printing position with respect to the platen.

By the Court. Do I understand from your testi-
142 mony that anything revolving on something like a hub of a wheel, on a pivot or similar action, does not go at an angle of 90° or perpendicular to that pivot or action? A. I do not believe that I understood the question, if that is what my answer seemed to imply.

I meant that the type bar 6, before it reaches the cylinder, has a distance of about from 60 to 90 degrees from its rest in the basket.

Could I demonstrate by this model?

Mr. Bean. Pardon me, your Honor. Might I correct this record at this time? We are talking about two different things now.

Was your Honor referring to the movement of the bell crank 6 about the pivot point 7?

The Court. The bell crank 6, yes.

Mr. Bean. Mr. Joerissen, his Honor was referring to the movement of the bell crank 6 at the pivot point 7.

The Witness. I do not believe anybody can say accurately just what plane those two parts would be on, but what I was referring to was that that would be about 60 degrees from the cylinder—that is the way the model is made—I mean, the drawing. It happens to be that this type bar rest is a little lower on this model, but there is no reason why it

should not be there in order to save the manual labor of the operator in not driving the keys so far.

By Mr. Bean:

Q. You have just been referring now, Mr. Joerissen, have you not, to plaintiff's exhibit 8? A. Yes, sir.

Q. And with reference to the number of degrees that the type bar passes through in rotating from an at rest
143 position to a printing position? A. Yes, sir.

Q. Now, I will call your attention, Mr. Joerissen, to defendants' Exhibit F, and ask you, looking at the top of this exhibit, to tell me approximately the angular relation that the end key action of Q moves in in its operation with relation to the platen of the typewriter. A. I do not believe that I would be competent to tell you exactly that angular relation. If I had a rule of some kind—

Q. Approximately it might be about 50 degrees, might it not? A. No. It works at an angle, but I do not know what the angle would be.

Q. If we assume that I am holding my pencil at a position of 90 degrees off of the platen, and we depress that particular key, Q, it would appear that the angle is about one-half of a 90 degree angle, would it not? A. It might look that way, yes.

Q. Then, still referring to that model, and also referring to the drawing, plaintiff's exhibit 15, would you please advise the Court how a member 6, which rotates in a plane at 90 degrees to the platen of a typewriter, and must have a direct connection with the end of the key lever, can operate a key lever—a type bar which moves at an angle of, we will say, about 45 degrees to the platen. A. It is simply a matter of adjustment for the mechanic to bend the type bar where it engages the link, so that it will come nearly within the angle that the link travels.

Q. Then the type bar 40, as I understand it, is not a straight type bar on the end actions? A. It is a straight type bar, with the exception that it is necessary to make adjustments in the position that they are in. The condition of the type bars on every machine varies, as I said
144 before, and therefore you have to take into consideration that variation and you make your machine accordingly when you lay it out. It is not positive that, in the

final analysis, that 7 would be exactly in a straight line. It might be in a curved line.

Q. Don't you know, Mr. Joerissen? A. I know, in my opinion, that it could be made either way. I have seen machines made with those links mounted on a straight line and also on a curved line, curved actions."

When asked wherein his patent stated that a horizontal segment should be used the witness stated that he found no reference in the patent in suit to either a horizontal or a vertical segment.

The drawing, plaintiff's Exhibit 15, was again referred to:

"Q. When was it that you made this drawing or had this drawing made, plaintiff's exhibit 15? A. I had that made during the session of the Court, in order to show you just how I proposed to dispose of the different mechanisms, after the testimony of Mr. Going and of someone else who stated that it could not be put into a machine.

Q. Has it been feasible in actual practice to have type actions where there is any appreciable lateral strain? A. Just what do you mean by that? Would you please explain what you mean by that?

Q. I am now referring to having structural members which are bent instead of being in a straight line, pivoted, to cause an operation.

Now, has it been feasible to have any parts in typewriters so arranged so that when you depress one end of a structural member it has a tendency to roll over sideways?

A. Yes, it has been feasible.

145 Q. Can you refer to any— A. (Interposing). Yes, if you have an Underwood Typewriter—that thing has been done in an Underwood Typewriter. It was always considered an impossibility, but they did it just the same.

Q. To what extent is it done? A. It is done on all the end bars, so that instead of going in a real circle, it performs an arc.

Q. What part is it that does that? A. The link or the bell crank, as you call it. We call it the link.

* * * *

Q. Referring to your plaintiff's exhibit No. 8, plate model showing the Joerissen construction, would you advise the Court as to the standard Underwood parts that you used

should not be there in order to save the manual labor of the operator in not driving the keys so far.

By Mr. Bean:

Q. You have just been referring now, Mr. Joerissen, have you not, to plaintiff's exhibit 8? A. Yes, sir.

Q. And with reference to the number of degrees that the type bar passes through in rotating from an at rest
143 position to a printing position? A. Yes, sir.

Q. Now, I will call your attention, Mr. Joerissen, to defendants' Exhibit F, and ask you, looking at the top of this exhibit, to tell me approximately the angular relation that the end key action of Q moves in in its operation with relation to the platen of the typewriter. A. I do not believe that I would be competent to tell you exactly that angular relation. If I had a rule of some kind—

Q. Approximately it might be about 50 degrees, might it not? A. No. It works at an angle, but I do not know what the angle would be.

Q. If we assume that I am holding my pencil at a position of 90 degrees off of the platen, and we depress that particular key, Q, it would appear that the angle is about one-half of a 90 degree angle, would it not? A. It might look that way, yes.

Q. Then, still referring to that model, and also referring to the drawing, plaintiff's exhibit 15, would you please advise the Court how a member 6, which rotates in a plane at 90 degrees to the platen of a typewriter, and must have a direct connection with the end of the key lever, can operate a key lever—a type bar which moves at an angle of, we will say, about 45 degrees to the platen. A. It is simply a matter of adjustment for the mechanic to bend the type bar where it engages the link, so that it will come nearly within the angle that the link travels.

Q. Then the type bar 40, as I understand it, is not a straight type bar on the end actions? A. It is a straight type bar, with the exception that it is necessary to make adjustments in the position that they are in. The condition of the type bars on every machine varies, as I said
144 before, and therefore you have to take into consideration that variation and you make your machine accordingly when you lay it out. It is not positive that, in the

final analysis, that 7 would be exactly in a straight line. It might be in a curved line.

Q. Don't you know, Mr. Joerissen? A. I know, in my opinion, that it could be made either way. I have seen machines made with those links mounted on a straight line and also on a curved line, curved actions."

When asked wherein his patent stated that a horizontal segment should be used the witness stated that he found no reference in the patent in suit to either a horizontal or a vertical segment.

The drawing, plaintiff's Exhibit 15, was again referred to:

"Q. When was it that you made this drawing or had this drawing made, plaintiff's exhibit 15? A. I had that made during the session of the Court, in order to show you just how I proposed to dispose of the different mechanisms, after the testimony of Mr. Going and of someone else who stated that it could not be put into a machine.

Q. Has it been feasible in actual practice to have type actions where there is any appreciable lateral strain? A. Just what do you mean by that? Would you please explain what you mean by that?

Q. I am now referring to having structural members which are bent instead of being in a straight line, pivoted, to cause an operation.

Now, has it been feasible to have any parts in typewriters so arranged so that when you depress one end of a structural member it has a tendency to roll over sideways?

A. Yes, it has been feasible.

145 Q. Can you refer to any— A. (Interposing). Yes, if you have an Underwood Typewriter—that thing has been done in an Underwood Typewriter. It was always considered an impossibility, but they did it just the same.

Q. To what extent is it done? A. It is done on all the end bars, so that instead of going in a real circle, it performs an arc.

Q. What part is it that does that? A. The link or the bell crank, as you call it. We call it the link.

* * * *

Q. Referring to your plaintiff's exhibit No. 8, plate model showing the Joerissen construction, would you advise the Court as to the standard Underwood parts that you used

in this plate model? A. I do not believe there is anything there except the type bar and the link or the bell crank, as you call it. This key lever has been modified so that it is no longer one of the standard parts.

Q. Did you take a standard key lever and modify it? A. Yes.

Q. How about the type bar? A. I said that the type bar was standard.

Q. And is the positioning of these parts, that is, the fulcrum or pivot point of the type bar, and of the extreme end of the key lever, about the same as it is in the Underwood? A. I think the key lever is, but I do not think the type bar. It is positioned in the place I thought the most usable, because the positioning of the type bar rest has nothing to do with the action of the typewriter, as you know.

Q. I am not referring to the type bar rest. I am referring to the pivot or fulcrum point of the type. That
146 is about the same as it is in the Underwood, is it not? A. It is about the same, yes."

Charles W. Gosnell was called as a witness on behalf of the plaintiff in rebuttal, and being duly sworn, testified as follows:

He said that he had done a good deal of experimenting on the Cahill electric typewriter for possibly two or three years and had done considerable experimental work on a supplementary lever machine, and had also made attachments for different parties in his business as a model maker. He stated that he had made the model, Plaintiff's Exhibit 8, using what standard parts he could although he had had to make several parts. He agreed that in working out new developments, it is customary to change centers, adjust parts and increase or decrease the length of levers in order to produce an operative mechanism. In his judgment, the single action, Plaintiff's Exhibit 8, functioned satisfactorily and that starting with such a single action a complete typewriter could be built.

Cross Examination

The witness expressed a knowledge of vertical and horizontal segment front strike machines, and characterized the plate model, Plaintiff's Exhibit 8, as a horizontal segment device. When asked where the type bar pivot point was located with respect to the platen he said: "That all depends

upon how far your type set on your type bar." In the model he thought that the pivot point of the type bar was about 2° from the platen and that in Defendants' Exhibit F, the pivot point was somewhere around 20° from the platen.

"Q. Have you ever made a complete typewriting ma-
147 chine embodying this Joerissen mechanism? A. No, sir.

Q. Have you ever tried to? A. No, sir; I never had any orders to do it. I would like to.

Q. You state that it is merely a matter of mechanical skill to work in the side key actions, working from the model No. 8? Is that correct? A. Why, yes, sir.

Q. Were you listening to Mr. Joerissen's testimony today? A. Yes, sir.

Q. Had you any familiarity with this chart, plaintiff's exhibit 15? A. I just glanced at it yesterday for about two to five minutes.

Q. Can you read drawings? A. Yes, sir.

Q. Referring to plaintiff's exhibit 15, I will call your attention to pivot bar 7. A. Yes.

Q. I would like you to advise the Court as to whether that pivot bar 7 extends in a plane parallel to the platen of the typewriter as shown in that drawing? A. It looks, according to that perspective drawing, that it stands—well, I would not say, perfectly frankly, but there is a slight degree from where I am sitting; the platen moves just approximately one or two degrees this way.

Q. It is awfully hard to tell from this drawing much about it? A. Yes. Well, that is only a picture.

Q. Well, now, you understand that the bell crank 6
148 is pivoted on and rotates about the pivot No. 7? A. Yes, sir.

Q. What would you say the path of movement of any part of that bell crank 6 is during its rotation to that pivot bar 7? Is it 90 degrees? A. That bell crank 6—to bring the type bar action up against the platen?

Q. If we depress the key lever 1. A. Yes.

Q. What is the path of movement of any part of the bell crank 6 with regard to a plane passing lengthwise through the platen?

Are you unable to state? A. No, I am not unable to state; I want to study the drawing just a second, that is all.

You press the key lever 1, and it is pivoted on 7—why, I would say that—you want the angle, don't you? Well, it all depends upon the position, how far you are throwing that type bar forward.

If I understand your question, you press key 1, and that slides along in here (indicating).

Would you give me the information whether that lever pivots on 7?

Q. Yes. As I understand it, the bell crank 6 pivots on 7 or rotates around 7. A. Oh, rotates around 7?

Q. Yes, sir. A. Well, it all depends how far you are going to move this (indicating). This type bar, to hit the platen, would be the angle of degree this thing (indicating) would move in that arc (indicating).

Q. I am not referring now to the possible arc of movement of the bell crank 6. I am referring to the path
149 that any part of 6, the plane of the path that any part of 6 moves in with relation— A. With the pressure of that key, it would move toward the type bar. When you depress this, if I look at the drawing right, this is a loose pin, which I do not see—

Q. Possibly we can arrive at this in another way, if you have completed your answer. A. Yes.

Q. I do not want to shorten it.

Referring to defendants' exhibit 7, which is a Remington noiseless typewriter, I will operate the key lever and type bar. Do you see that operation? A. Yes.

Q. Now, at what angular relation to the platen of the typewriter, front face of the platen of the type-writer, does the type bar move during its operation? A. I would say in a radial position, horizontal vertical radial position.

Q. Are you familiar with typewriters, and with the terminology that is used in connection with them? A. No, I could not say that I am familiar with the terminology used in the typewriter. I am not a typewriter expert. I am a model maker that makes anything at all from a patent office drawing.

Q. I see. And, customarily, in making these things, you operate under the directions of the inventor, we will say? A. Yes.

Q. And according to the suggestions that he makes from time to time? A. Yes.

Q. As to the way in which it can be worked out? A. Yes.

150 Q. Any device that is given to you? A. Any device that is given.

Q. Would that be particularly necessary in the working out of a complete complement of typewriter type and key action? In a proposed construction, you would have from time to time to receive some advice from the inventor as to how it could be worked out? A. Yes, at times. We always consult the inventor as to just what changes he would make, and what his idea of the thing is. We always take his advice first, and then we may suggest a better movement, or better action, or a change of fulcrum points where he would get better action.

Q. Would you have any difficulty in conceiving, from the plate model, plaintiff's exhibit 8, that when you got around to the end actions you were going to have a bell crank lever 6 formed or shaped as is assumed in this drawing, plaintiff's exhibit 15? A. Why, no; I could not give you a plan right off.

The Court. This witness said that he is not a typewriter expert. What is the use of wasting time?

Mr. Bean. I will discontinue the examination." Plaintiff's case was closed.

Frederick W. Shremp was recalled as a witness for the defendants and having been previously sworn, testified as follows:

He said that the end actions shown in the drawing, Plaintiff's Exhibit 15, would be inoperative for the reason that there were two conflicting planes of travel since the bell crank 6 rotates on the shaft 7 at an angle of 90° to the center line of the platen while the type bar 4 lies in the segment at an angle of approximately 48° and travels on that angle in a plane to the printing point, the obstruction aris-
151 ing where the connecting end of the bell crank 6 crosses at right angles to the path of travel of the type bar 4 which is travelling at 48° on a plane to the platen. The parts would bind, he said, or might even be stopped in motion.

The witness then identified a chart, later entered in evidence as Defendants' Exhibit W, and stated that it was made under his direction after he had examined Plaintiff's Exhibit 15, its purpose being to graphically show the interference or obstruction arising through trying to operate a driving member in its plane against the driven member

travelling in another plane, stating that the bell crank 6 which is connected with the type bar 4 at this point moves in a plane at 90° from the center line of the platen and the type bar 4 travels in a plane at 48° to the printing point. The movement is obstructed by the movement of the type bar at an angle of 48°. He also said that if one bell crank in the machine could move, it would interfere with, strike, the heel of the next adjacent type bar. The chart, Defendants' Exhibit W, he stated, was made with reference to the drawing, Plaintiff's Exhibit 15. He testified that an effort was made to pick the dimensional differences between centers off of the perspective drawing, Plaintiff's Exhibit 15, but that it was not possible to use exact centers and dimensions; that Fig. 1 on Exhibit W represented a plan view of the construction shown in Exhibit 15 and Fig. 2 is an enlarged section of Fig. 1 showing the type bar and bell crank mechanism. He expressed the opinion that if the heel of the type bar were to be bent over to assume an angular relation with the rest of the type bar, and then operated by the bell crank lever, that there would not be an operative device, since bending the bar would not change its plane of travel.

"Q. Have you been able to appreciate any way in
152 which that end action can be made to operate. A. I have not."

He did not know whether prior to the introduction of the present Noiseless portable there were any typewriters except the 1921 Noiseless having horizontal segments pivoting the type bar for a front strike.

We hereby agree that the above statement of evidence is correct and that the same may be approved by the Court.

August 14, 1936.

T. A. HOSTETLER,
Attorney for Defendant.

The foregoing contains the substance of all of the evidence given on the hearing of this cause, and the same is accordingly approved as such to become and be part of the record on the appeal in the said cause, this 15th day of August, 1936.

JENNINGS BAILEY,
Justice.

INDEX.

Page

Stipulation 63- 50

Testimony of Charles Alexander Mason..... 64- 51

Testimony of Frederick W. Shremp 84- 65

Testimony of George G. Going 102- 77

Testimony of Charles E. Smith 114- 85

Testimony of Carl A. Joerissen 130- 97

Testimony of Charles W. Gosnell 146-108

Testimony of Frederick W. Shremp 150-111

116

Feb. 13, 1934.

C. A. JOERISSEN

Re. 19,076

TYPEWRITING MACHINE

Original Filed March 22, 1926 3 Sheets-Sheet 1

Fig. 1.

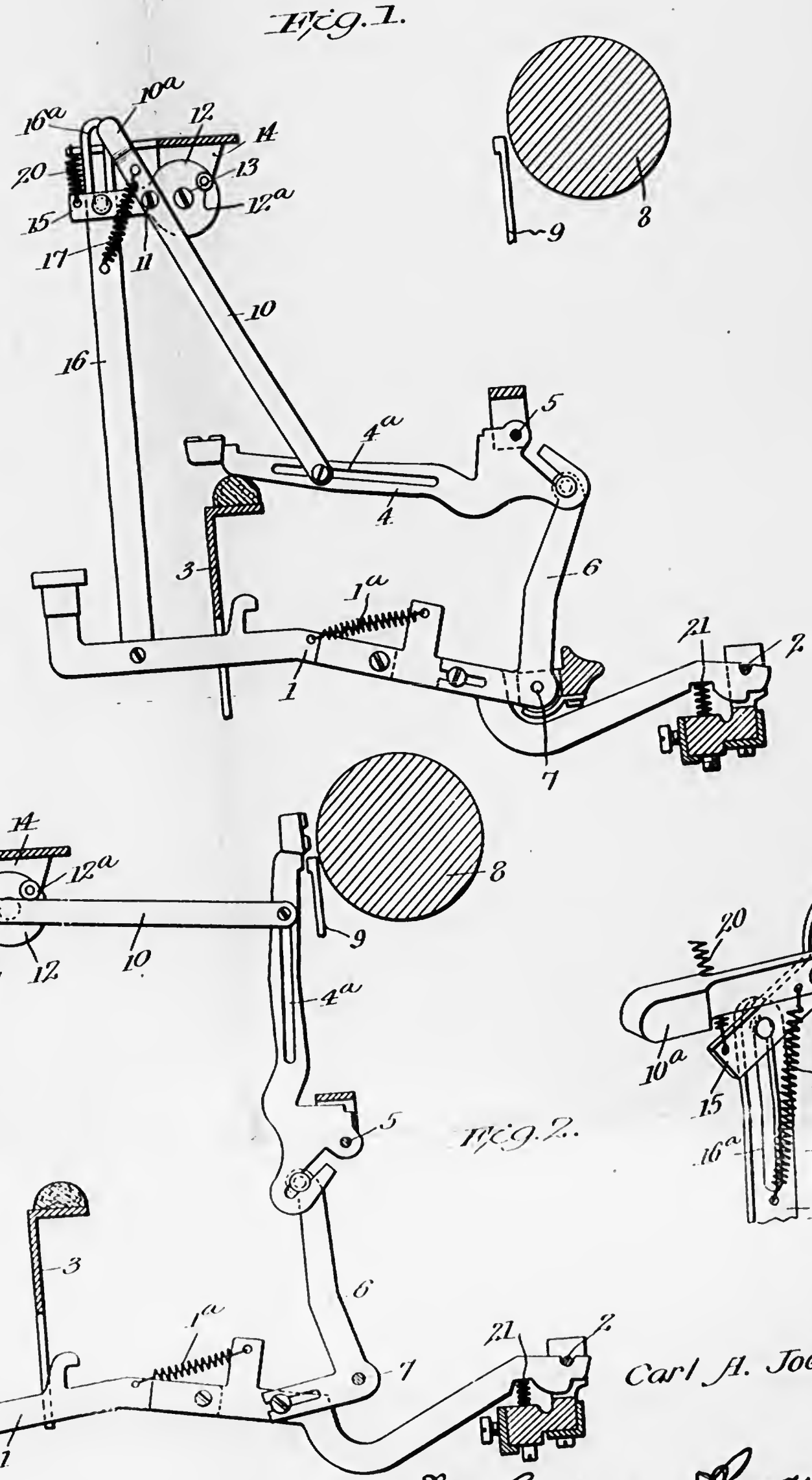

Fig. 2.

Fig. 4.

Inventor

Carl A. Joerissen.

By Cushman, Darby & Cushman

Attorneys

117

Feb. 13, 1934. C. A. JOERISSEN Re. 19,076

TYPEWRITING MACHINE

Original Filed March 22, 1926 3 Sheets-Sheet 2

Fig. 3.

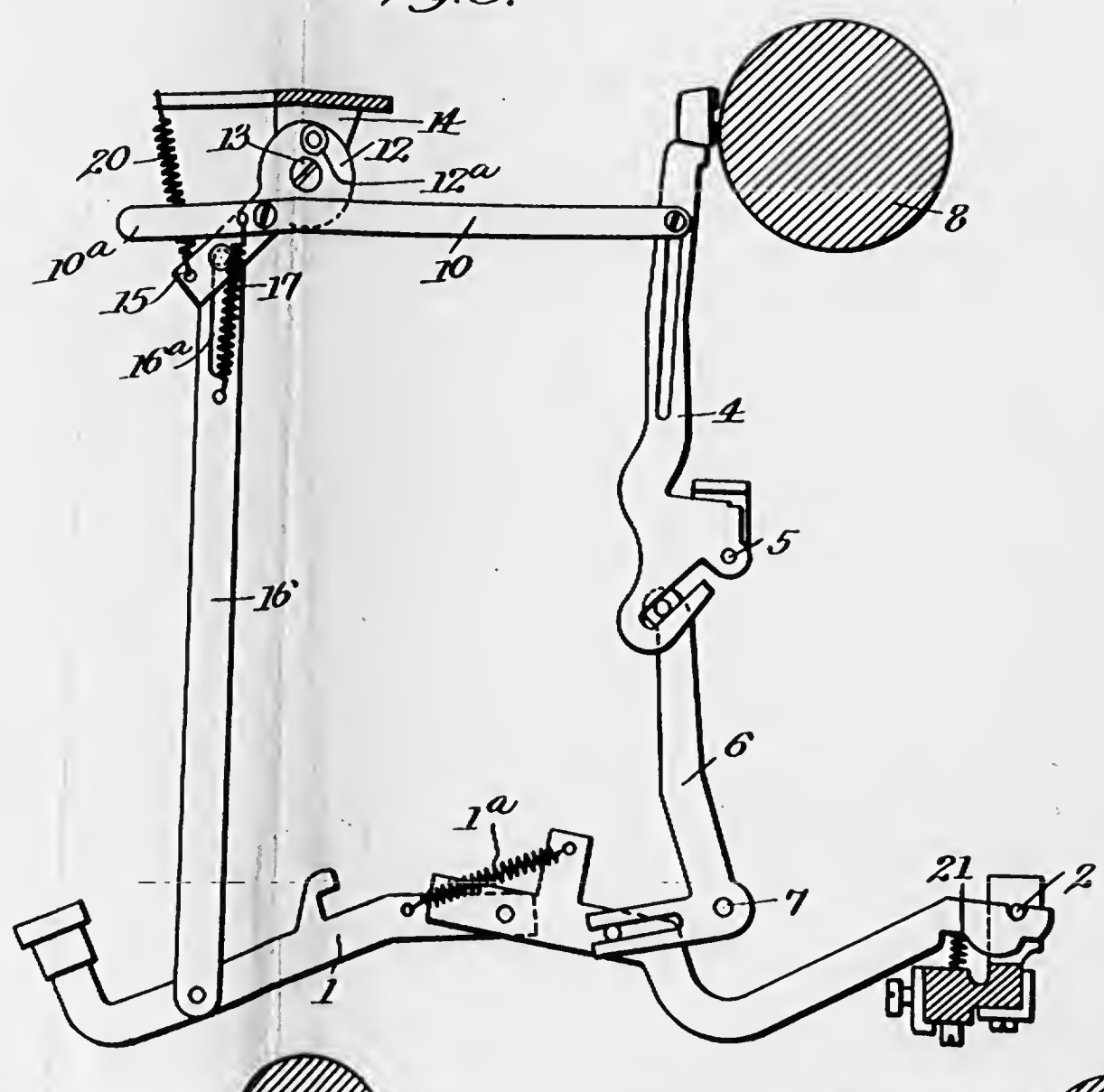

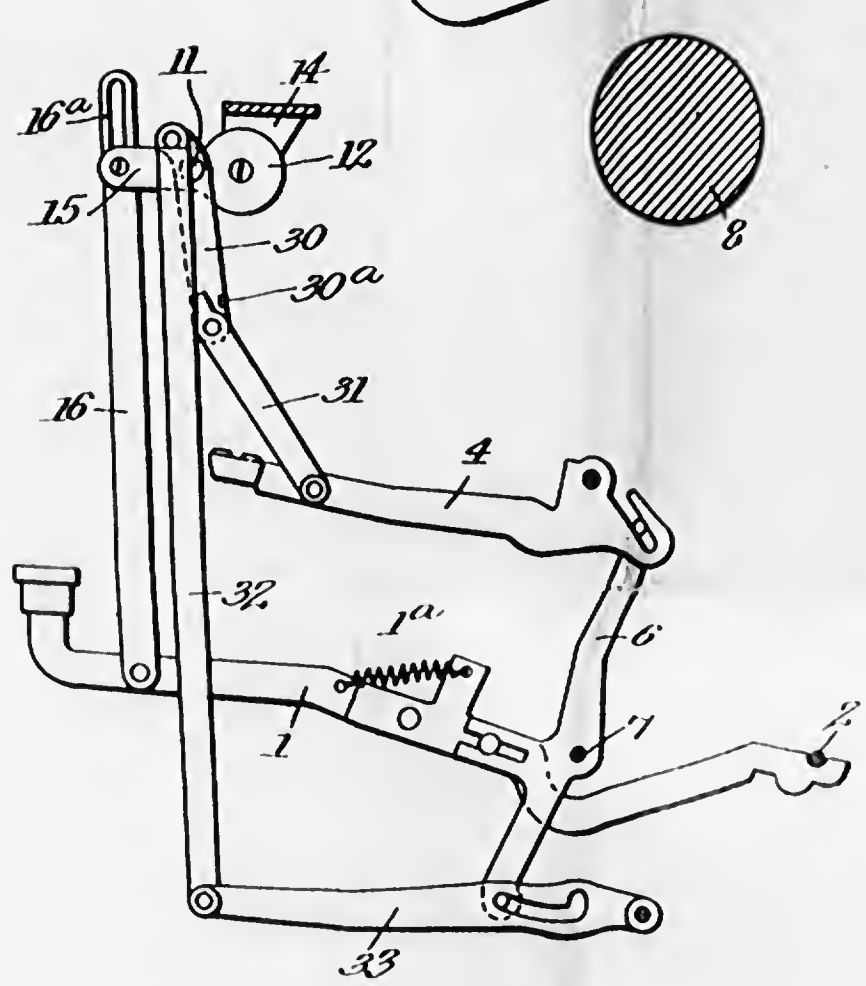

Fig. 5.

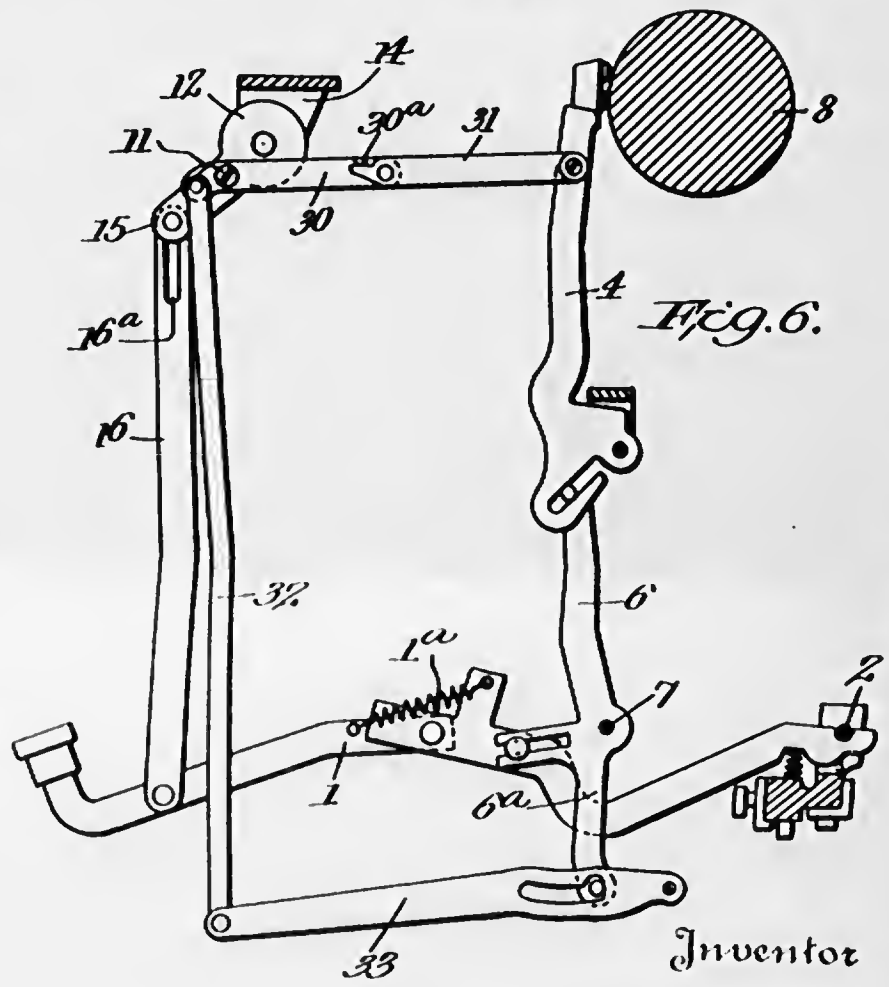

Fig. 6.

Inventor

Carl A. Joerissen

By Coulman, Bryant & Darby

Attorneys

118

Feb. 13, 1934.

C. A. JOERISSEN

Re. 19,076

TYPEWRITING MACHINE

Original Filed March 22, 1926 3 Sheets-Sheet 3

Fig. 7.

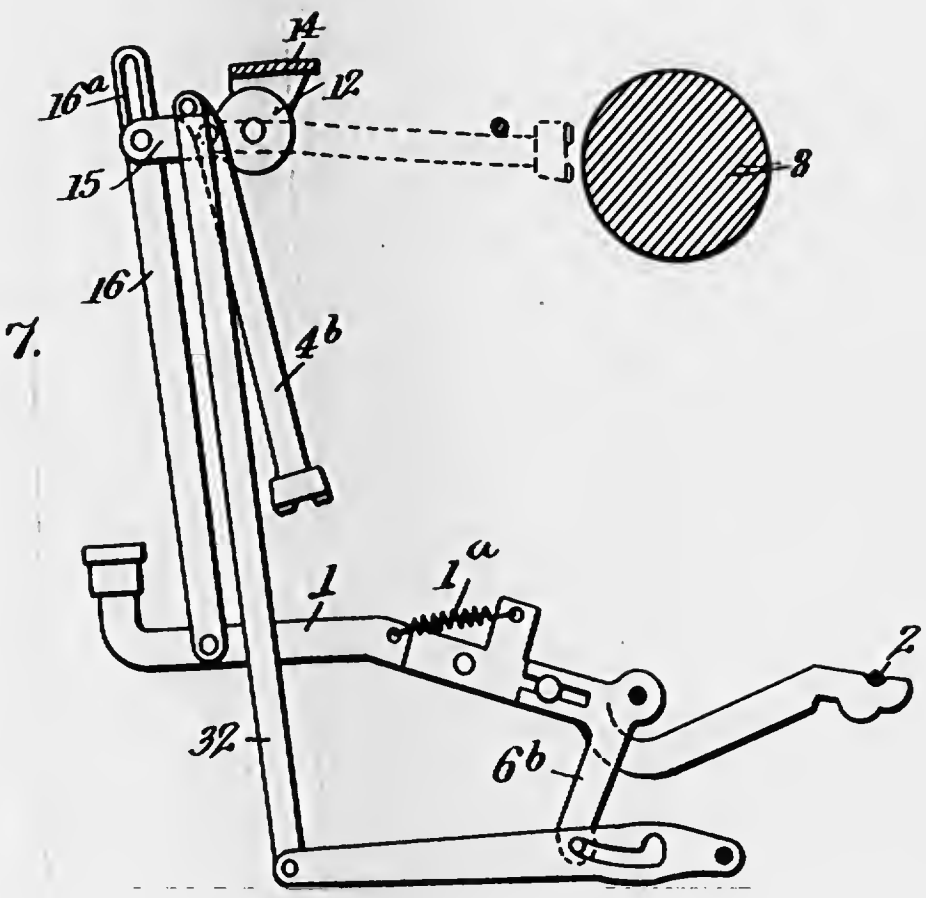

Fig. 8.

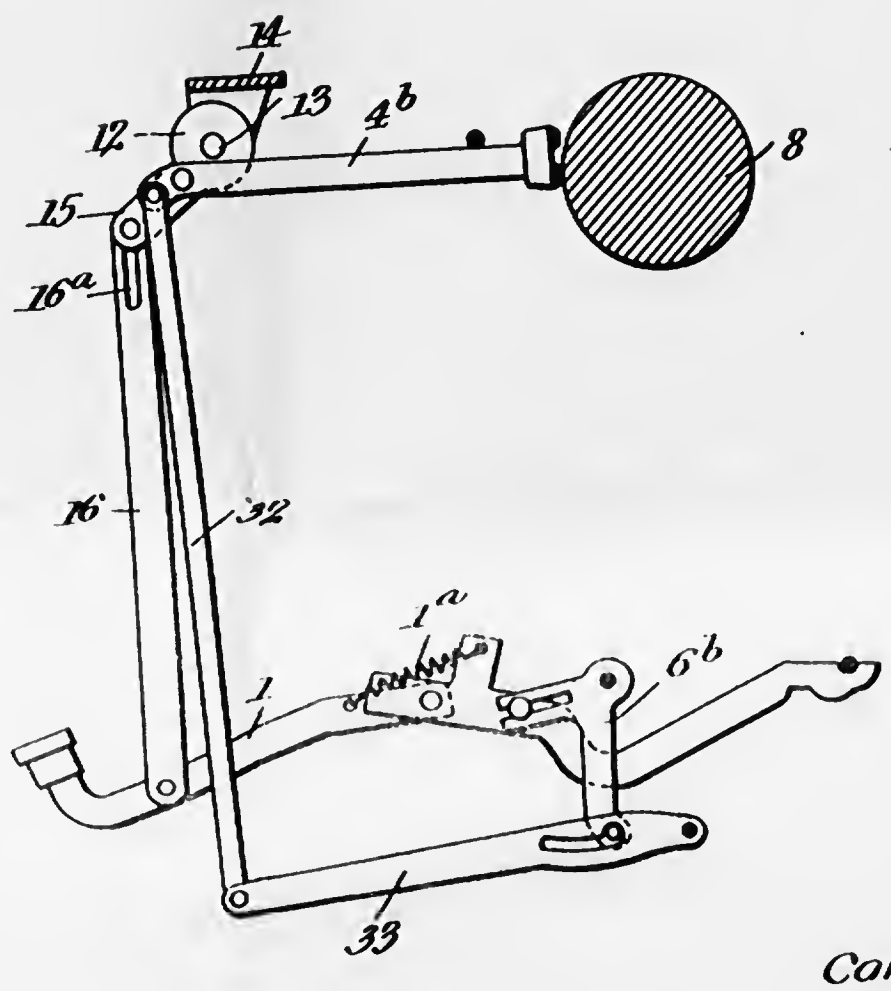

Inventor

Carl A. Joerissen,

By Lehlman, Dupont & Dailey

Attorneys

Reissued Feb. 13, 1934

Re. 19,076

UNITED STATES PATENT OFFICE

19,076

TYPEWRITING MACHINE

Carl A. Joerissen, Washington, D. C.

Original No. 1,846,339, dated February 23, 1932, Serial No. 96,602, March 22, 1926. Application for reissue December 15, 1933. Serial No. 702,611

28 Claims. (Cl. 197—25)

The present invention relates to improvements in typewriting machines, and particularly to means whereby the operation of such a machine is effected with a minimum amount of noise.

Particularly the object of the invention is to overcome the objectionable noise produced by the type bars striking the platen and to provide a key action whereby the type bars will be forced into printing relation with the platen by a positive movement, securing clear impressions, but without forcibly striking the platen.

I am aware that it has been heretofore proposed to provide typewriter key actions in which the noise produced by the type bars striking the platen will be materially reduced, but by the present invention the movement of all the parts is positively effected through connections with the key lever, and without the necessity of employing auxiliary parts for imparting movement to the type bars.

While the invention hereinafter described may be employed in connection with typewriting machines having type bars of various forms and supported in different relations with regard to the printing roll or platen, I have illustrated embodiments thereof in connection with a type action, in which the type bars are pivotally supported and adapted to move upward and rearward into printing relation with a relatively elevated platen.

In the accompanying drawings:

Figure 1 is an elevation of a typewriter key action embodying the present invention, certain parts of the machine being shown in section and the type bar being in its normal inactive position.

Figure 2 is a similar view showing the position of parts when the key lever has been partly depressed and the movement of the type bar toward printing relation with the platen checked.

Figure 3 is a simlar view showing the relation of the parts on the completion of the depression of the key lever and the movement of the type bar into printing relation with the platen.

Figure 4 is a detail, on a slightly enlarged scale, of a portion of the connection between the key lever and the type bar checking means.

Figures 5 and 6 are elevational views of a modification showing the parts, respectively, in the positions assumed when the type bar is at rest and in printing relation to the platen.

Figures 7 and 8 are views, respectively similar to Figures 5 and 6, of a slightly modified form of key action, embodying the invention.

In the drawings many of the parts are shown more or less conventionally, and the views are, to a considerable extent, diagrammatic. There can, of course, be material variation as regards proportions and sizes of the several parts, and also considerable modification in many of the details without departing from the invention. Except where specifically referred to in the appended claims, it is not intended to limit the invention to the exact details shown, and the drawings are to be considered illustrative rather than restrictive of the invention.

In Figures 1 to 6 inclusive, I have illustrated the invention as embodied in a key action mechanism of substantially the type employed in the well known Underwood typewriting machine comprising a key lever 1 fulcrumed at its rear end upon a rod 2, and extending through slots in a comb plate or frame member 3. The type bar 4 is pivotally mounted upon a rod 5, which is of arc shape so that the several type bars of the machine lie in the form of a transversely curved basket.

Movement of the key lever 1 is transmitted to the type bar 4 by a sub-lever 6, fulcrumed at 7 on the machine frame. When the forward, outer, end of the key lever 1 is depressed, the type bar 4 will be caused to swing upward and rearward about its pivot 5 into printing relation with the platen 8 and the usual type guide 9 in the manner well understood.

In the drawings I have only illustrated a single key action, and it will be understood that this is to be duplicated throughout the series of type bars in the ordinary manner.

10 designates a link which is pivotally supported at an intermediate point of its length, and has one end connected to the type bar 4. As shown, the pivot 11 of the link 10 is carried by a pivotally mounted fulcrum support 12, which is supported to rock about an axis 13 extending through the members of a depending comb plate or frame section 14. The fulcrum support 12 is provided with a forward extension 15 that engages a link or rod 16 extending upward from and pivotally connected at its lower end to the key lever 1.

The link or member 10 is eccentrically mounted on the fulcrum support 12, and it will be seen that as the type bar swings upward from its normal inactive position represented in Figure 1 to the substantially vertical position shown in Figure 2, such member will be brought into such relation to the axis 13 of the fulcrum support and said bar as to check the swinging movement of the type bar just prior to its coming into contact with the platen.

The engagement of the link or rod 16 with the extension 15 of the fulcrum support 12 will,

as the key lever continues to move downward from the position shown in Figure 2, cause a bodily rocking of the fulcrum support about the axis 13, thus moving the connecting member 10 in the direction of its length and positively forcing the type bar toward the platen, completing its movement into printing relation therewith.

As shown in Figures 1 to 3, the stem of the type bar 4 is provided with a longitudinally extending slot 4*a* into which projects a pin or stud at the inner end of the link or checking member 10, and a spring 17 connects the checking member 10, at the opposite side of its fulcrum 11 from the type bar, with the connecting link or rod 16 that extends upward from the key lever 1. The outer end of the link or checking member 10 may be slightly weighted, as indicated at 10*a*, so that this member will offer practically no resistance to the initial upward and rearward swinging movement of the type bar.

As shown, the link or connecting rod 16 has formed therein adjacent its upper end a longitudinal slot 16*a* which receives a pin projecting laterally from the forward extension 15 of the pivotally mounted fulcrum support 12 and these parts are so related that the upper end of said slot 16*a* will engage said pin on the fulcrum support substantially at the moment that the movement of the type bar into printing relation with the platen is checked as before described, at which time the connection of the checking member 10 with the type bar and the fulcrum 11 are in substantial horizontal alignment with the axis 13 of the fulcrum support.

Therefore, while the movement of the type bar toward printing relation with the platen will be checked there will be no material interference with downward movement of the key lever and the completion of the movement of the type bar into printing relation with the platen will be effected by a positive force exerted by pull of the link 16 on the extension 15 and a consequent movement in the direction of the length of the connecting member 10.

A spring 20 may be interposed between a portion of the typewriter frame and the extension 15 of each fulcrum support to assist in returning the parts to normal position, the machine, of course, including the usual springs 21 for lifting the key levers after the same are relieved from pressure. As shown, the key levers 1 are of the common form including two pivotally connected sections having a coil spring 1*a* interposed between them, whereby the checking of the upward and rearward swinging movement of the type bar will not interfere with the downward movement of the key and outer end of the key lever through the required stroke.

If desired, each fulcrum support 12 may be provided with a short lateral projection 12*a*, which will extend over the upper edge of the checking member 10 when the parts are in the position shown in Figures 2 and 3, and, under the pull exerted by the spring 20 will assist in starting the turning movement of said checking member about its fulcrum so that it will not in any way interfere with the return of the type bar to its normal inactive position.

In the embodiment of the invention illustrated in Figures 5 and 6, the means for checking the movement of the type bar toward printing relation with the platen includes a toggle, one member 30 of which is fulcrumed on the pivotally mounted fulcrum support 12, and the other member 31 of which is pivotally connected to the type bar 4. The forward end of the toggle member 30 is connected by a link 32 with a lever 33, which is arranged below the plane of the key lever 1, and is adapted to be rocked about its fulcrum 34 by the movement of a downwardly extending arm 6*a* of the sub-lever 6.

With this arrangement it will be seen that as the type bar moves from its normal inactive position shown in Figure 5 upward and rearward toward the platen 8, the members 30, 31, of the toggle will come into a substantially straight line relation, thus checking the movement of the type bar, and when the fulcrum support 12 is rocked about its pivotal axis the toggle will exert a positive push upon the type bar, completing the movement thereof into printing relation with the platen. The final operative swing of the fulcrum support is permitted by the pin of the pin and slot connection between members 6*a* and 33 coming under the upward enlargement at the right end of the slot (Fig. 6).

That part of the fulcrum support between its swinging axis and the screw 11 constitutes a link portion swingable downwardly from its normal position of rest and rearwardly to complete the stroke of the type bar. The fulcrum support being thus normally poised, its inertia is overcome with the least possible effort. Spring 1*a* in straightening the key bar moves link 16 upwardly to restore the fulcrum support, the usual key bar return spring assisting in this action.

A suitable stop 30*a* may be provided about the pivotal connection between the toggle members 30, 31, to prevent any possibility of this connection being moved upward beyond that in which the toggle members are in substantially straight line relation, as shown in Figure 6.

In the embodiment of the invention illustrated in Figures 7 and 8 the type bar, 4*b*, is pivoted directly to the pivotally mounted fulcrum support 12 and the outer end thereof is connected by the link 32 with the lever 33.

A sub-lever 6*b* is interposed between the key lever 1 and the lever 33, so that the initial depression of the key lever will actuate the lever 33 and through its connection with the type bar swing the latter into alignment with the type guide 9 and the platen 8.

The extent of movement permitted the lever 33 is such that swinging movement of the type bar will be checked as said bar comes into substantial alignment with the axis of the fulcrum support 12 and the pivotal connection of the bar with said support.

The length of the type bar is such, and it is so related to the other parts, that with the several members in the relation described the printing head on the type bar will not touch the platen. However, as the fulcrum support 12 is rocked by the positive pull exerted through the connection 16, as the downward movement of the key lever continues, the type bar will receive a slight movement substantially in the direction of its length which will complete the movement of said bar into printing relation with the platen.

It is believed that the operation and advantages of the invention will be readily understood from the foregoing description in connection with the drawings. It will be seen that the invention provides a very simple means for preventing the sudden striking of the type bars against the platen, which is the cause of the objectionable noise incident to operating such machines. By the arrangement of parts described, the movement of the type bar into printing relation with the

platen is checked and the completion of such movement is caused by a positive connection between the key lever and the type bar.

It will be seen that whether a special checking means made as a single member extending continuously from its pivotal connection with the fulcrum support 12 to the type bar or in the form of a toggle, as illustrated in Figures 5 and 6, is interposed between the fulcrum support and the type bar or the latter is pivotally connected directly to said support the turning of said support which effects the completion of the type bar movement to printing relation with the platen is due to a positive connection with the key lever.

In the drawings I have illustrated a key action located approximately at the middle, transversely, of the machine and wherein the link connections 16 and 32 may be perfectly straight, one piece, elements. The corresponding parts of key actions situated at or nearer the ends or sides of the type bar basket will, of course, have to be slightly modified, the exact form of each said connection depending upon the location of the particular key action in the machine.

However, in all instances there is a positive connection between the key lever and the fulcrum support for the checking means for rocking said support and effecting a movement in the direction of the length of said means for effecting completion of the movement of the type bar to printing relation to the platen.

Having thus described the invention, what is claimed as new is:

I claim:

1. In a typewriting machine, the combination of a platen, a key lever, a type bar movable to and from printing relation with the platen, means controlled by actuation of the key lever for effecting initial movement of the type bar toward the platen, means for checking the movement of the type bar toward the platen including a pivotally mounted member connected to the type bar, and means for connecting the key lever and said pivotally mounted member during a portion of an operative movement of the key lever for positively moving said member to effect completion of a movement of the type bar toward the platen.

2. In a typewriting machine, the combination of a platen, a depressible key lever, a pivotal type bar mounted to swing upward and rearward into printing relation with the platen, means controlled by actuation of the key lever for effecting initial movement of the type bar toward the platen, means for checking the movement of the type bar toward the platen including a pivotally mounted member connected to and extending forward from the type bar, and means for establishing a connection between the key lever and said pivotally mounted member for positively moving said member to effect completion of a movement of the type bar toward the platen.

3. In a typewriting machine, the combination of a platen, a key lever, a type bar movable to and from printing relation with the platen, means controlled by actuation of the key lever for effecting initial movement of the type bar toward the platen, means for checking the movement of the type bar toward the platen prior to its coming into printing relation to the platen including a member pivotally supported in advance of the platen and connected to the type bar, and means connected with the key-lever for moving said member about its pivotal support, after the movement of the type bar has been checked, to effect completion of a movement of the type bar to printing relation with the platen.

4. In a typewriting machine, the combination of a platen, a depressible key lever, a type bar movable to and from printing relation to the platen, means controlled by depression of the key lever for effecting initial movement of the type bar toward the platen, means for checking such movement of the type bar including a member connected to said bar and extending at an angle to the length of the bar when its movement toward the platen is checked, and means including a member extending upward from the key lever for positively actuating said first mentioned member to effect completion of movement of the type bar into printing relation with the platen.

5. In a typewriting machine, the combination of a platen, a depressible key lever, a type bar movable to and from printing relation to the platen, means controlled by depression of the key lever for effecting initial movement of the type bar toward the platen, means for checking such movement of the type bar including a member connected to said bar and extending substantially at right angles to the length of the bar when its movement toward the platen is checked, and means adapted to be positively actuated by the key lever for imparting a substantially longitudinal movement to said member to effect completion of movement of the type bar into printing relation to the platen.

6. In a typewriting machine, the combination of a platen, a key lever, a type bar movable to and from printing relation with the platen, means controlled by actuation of the key lever for effecting initial movement of the type bar toward the platen, means for checking the movement of the type bar toward the platen, prior to its coming into printing relation to the platen and including a pivotally mounted member connected to the type bar, and supplemental means connected with the key lever and adapted to positively rock said pivotal member during the later portion of an operative movement of the key lever to effect completion of movement of the type bar into printing relation to the platen.

7. In a typewriting machine, the combination of a platen, a key lever, a type bar movable to and from printing relation with the platen, means controlled by actuation of the key lever for effecting initial movement of the type bar toward the platen, means for checking the movement of the type bar toward the platen including a pivotally mounted member connected to the type bar, a pivotally mounted fulcrum support for said member, and means for connecting the key lever and said fulcrum support whereby downward movement of the key after movement of the type bar has been checked will rock said fulcrum support and move said member in the direction of its length to effect completion of movement of the type bar into printing relation to the platen.

8. In a typewriting machine, the combination of a platen, a key lever, a type bar movable to and from printing relation with the platen, means controlled by actuation of the key lever for effecting initial movement of the type bar toward the platen, means for checking the movement of the type bar toward the platen including a pivotally mounted member connected to the type bar, a pivotally mounted fulcrum support for said member, and a rod extending upward from the key lever and adapted as the key is depressed beyond the position assumed when movement of

the type bar toward the platen is checked to engage and positively rock the fulcrum support to move said member in the direction of its length to effect completion of movement of the type bar into printing relation to the platen.

9. In a typewriting machine, the combination of a platen, a depressible key lever, a pivoted type bar adapted to swing upward and rearward into printing relation to the platen, a sub-lever interposed between the key-lever and type bar and adapted to effect initial movement of the type bar toward the platen as the key lever is depressed, means for checking such movement of the type bar including a member connected to the type bar and extending substantially horizontally therefrom when movement of the type bar is checked, and a rod extending upward from the key lever and adapted, as said lever is depressed beyond the position assumed when movement of the type bar is checked, to move said member in the direction of its length to effect completion of the movement of the type bar to printing relation to the platen.

10. In a typewriting machine, the combination of a platen, a depressible key lever, a pivoted type bar adapted to swing upward and rearward into printing relation to the platen, a sub-lever interposed between the key-lever and type bar and adapted to effect initial movement of the type bar toward the platen as the key lever is depressed, means for checking such movement of the type bar including a pivotally mounted member connected to the type bar and projecting laterally therefrom when movement of the type bar is checked, a pivotal fulcrum support for said member, and means actuated by depressing the key lever beyond the position assumed when movement of the type bar is checked for positively moving the fulcrum support of said member to cause the latter to effect completion of movement of the type bar into printing relation to the platen.

11. In a typewriting machine, the combination of a platen, a key lever, a type bar movable to and from printing relation with the platen, means controlled by actuation of the key lever for effecting initial movement of the type bar toward the platen, means for checking the movement of the type bar toward the platen prior to its coming into printing relation to the platen and including a pivotally mounted member connected to the type bar, and a connecting means extending upward from the key lever and adapted as the key lever is depressed beyond the position assumed when movement of the type bar is checked to engage and positively rock said pivotally mounted member to effect completion of movement of the type bar to printing relation to the platen.

12. In a typewriting machine, the combination of a platen, a key lever, a pivotally mounted type bar, means controlled by actuation of the key lever for effecting initial swinging movement of the type bar toward the platen, means connected to and moving with the type bar for checking movement of such bar toward the platen prior to its coming into printing relation to the platen, and supplemental means positively actuated by the key lever, after the movement of the type bar has been checked, for effecting completion of movement of the type bar to printing relation to the platen in a substantially straight line direction.

13. In a typewriting machine, the combination of a platen, a key lever, a type bar movable to and from printing relation with the platen, means controlled by actuation of the key lever for effecting initial movement of the type bar toward the platen, means for checking the movement of the type bar toward the platen prior to its reaching printing relation to the platen including a link-like member pivotally supported in advance of the platen and having its rear end connected to the type bar, and means connected with the key-lever for moving the link relative to its pivotal support to effect completion of a movement of the type bar toward the platen.

14. In a typewriting machine, the combination of a platen, a key lever, a type bar movable to and from printing relation with the platen, means controlled by actuation of the key lever for effecting initial movement of the type bar toward the platen, means for the checking the movement of the type bar toward the platen, including a pivotally mounted member connected to the type bar, and supplemental means connected with the key lever and adapted to positively shift the fulcrum of said pivotal member during the latter portion of an operative movement of the key lever to move said member in the direction of its length to effect completion of movement of the type bar into printing relation to the platen.

15. In a typewriting machine, the combination of a platen, a type carrier mounted to swing upward to printing relation to the platen, means for checking movement of the type carrier toward the platen prior to the carrier coming into printing relation to the platen including a pivotally mounted member which remains stationary until said movement of the type carrier is checked and is thereafter bodily rocked to effect completion of movement of the type carrier to printing relation to the platen, a key lever, and means actuated by operation of the key lever for effecting successively movement of the type carrier and said pivotally mounted member.

16. In a typewriting machine, the combination of a platen, a depressible key lever, a type bar movable to and from printing relation with the platen, means controlled by depression of the key lever for effecting movement of the type bar toward the platen, means for checking such movement of the type bar prior to its reaching printing relation with the platen, including a pivotally mounted member connected with the type bar, and means, actuated by movement of the key lever after the movement of the type bar has been checked, for rocking said pivotally mounted member to effect completion of movement of the type bar into printing relation to the platen.

17. In a typewriting machine, the combination of a platen, a key lever, a pivotally mounted type bar movable to and from printing relation with the platen, means controlled by actuation of the key lever for effecting movement of the type bar toward the platen, means for checking such movement of the type bar prior to its reaching printing relation with the platen, including a pivotally mounted member connected with the type bar, and supplemental means, actuated by the key lever after the movement of the type bar has been checked, for rocking said pivotal member and effecting completion of the movement of the type bar towards the platen.

18. In a typewriting machine, the combination of a platen, a key lever, a type bar movable to and from printing relation with the platen, means actuated during the first portion of an operative movement of the key lever for effecting move-

ment of the type bar toward the platen, means for checking movement of the type bar toward the platen prior to the bar coming into printing relation to the platen, and including a member connected to the type bar and pivotally supported in advance of the platen, and supplemental means, actuated by the key lever after the movement of the type bar has been checked, for rocking said pivotally mounted member to effect completion of the movement of the type bar toward the platen.

19. In a typewriting machine, the combination of a platen, a depressible key lever, a pivoted type bar, means controlled by depression of the key lever for effecting movement of the type bar toward the platen, means movable with the type bar for checking such pivotal movement of the type bar prior to the bar coming into printing relation to the platen, and supplemental means providing a positive connection between the key lever and type bar, after such movement of the type bar has been checked, and effecting completion of the movement of the type bar toward the platen.

20. In a typewriting machine, the combination of a platen, a type carrier movable to and from printing relation with the platen, and means for moving the type carrier into printing relation to the platen including a normally collapsed toggle, the straightening of which acts to check movement of the type carrier prior to the latter's contacting with the platen, and means for moving the toggle substantially in the direction of its length to complete the printing movement of the type carrier.

21. In a typewriting machine, the combination of a platen, a type carrier movable to and from printing relation with the platen, and means for moving the type carrier into printing relation to the platen including a normally collapsed toggle, the straightening of which acts to check movement of the type carrier prior to the latter's contacting with the platen, and a rocking member connected with and adapted to supplement the action of the toggle to complete printing movement of the type carrier.

22. In a typewriting machine, the combination of a platen, a type carrier movable to and from printing relation with the platen, and means for moving the type carrier into printing relation to the platen including [illegible] one [illegible] toggle member, and means whereby the support is rocked to supplement the action of the toggle in completing printing movement of the type carrier.

23. In a typewriter, a type bar pivoted for an upward and rearward operative swing, a toggle comprising two pivotally connected members of which one has a pivotal connection with the type bar, a swingable link portion having a pivotal connection with the other of said toggle members, said link portion being swingable downwardly from its normal position of rest and rearwardly, a key bar operable to move the toggle members from a normally collapsed downwardly extending position to a relatively straightened position and to impart to the type bar a terminally checked throw to a position slightly in advance of striking position, and means [illegible] upon said link portion [illegible] the stroke of the type bar through said toggle.

24. In a typewriter, a type bar pivoted for an upward and rearward operative stroke, a toggle comprising two pivotally connected members of which one has a pivotal connection with the type bar, a swingable link portion having a pivotal connection with the other of said toggle members, said link portion being swingable downwardly from its normal position of rest and rearwardly, a key bar having a connection with said toggle and operable to move the toggle members from a normally collapsed downwardly extending position to a relatively straightened position and to impart to the type bar a terminally checked throw to a position slightly in advance of striking position, and means external of said connection thereupon effective to swing said link portion to complete the stroke of the type bar through said toggle.

25. In a typewriter, a type bar pivoted for an upward and rearward operative swing, a toggle comprising two pivotally connected members of which one has a pivotal connection with the type bar, a swingable link portion having a pivotal connection with the other of said toggle members, said link portion being swingable downwardly from its normal position of rest and rearwardly, a key bar operable to move the toggle members from a normally collapsed downwardly extending position to a relatively straightened position and to impart to the type bar a terminally checked throw to a position slightly in advance of striking position, means thereupon effective to operatively swing said link portion to complete the stroke of the type bar through said toggle, and power-storing means tending to restore said link portion.

26. In a typewriter, a type bar pivoted for an upward and rearward operative stroke, a toggle comprising two pivotally connected members of which one has a pivotal connection with the type bar, a swingable link portion having a pivotal connection with the other of said toggle members, said link portion being swingable downwardly from its normal position of rest and rearwardly, a key bar having a connection with said toggle and operable to move the toggle members from a normally collapsed downwardly extending position to a relatively straightened position and to impart to the type bar a terminally checked throw to a position slightly in advance of striking position, means external of said connection thereupon effective to swing said link portion to complete [illegible] the type bar through said toggle, [illegible]

27. In a typewriter, a type bar pivoted for an upward and rearward operative stroke, a toggle comprising two pivotally connected members of which one has a pivotal connection with the type bar, a swingable link portion having a pivotal connection with the other of said toggle members, said link portion being swingable downwardly from its normal position of rest and rearwardly, a key bar having a connection with said toggle and operable to move the toggle members from a normally collapsed downwardly extending position to a relatively straightened position and to impart to the type bar a terminally checked throw to a position slightly in advance of striking position, said connection [illegible] on the type bar [illegible] and terminally [illegible] of said connection [illegible] the stroke of the type bar through [illegible]

28. In a typewriter, a type bar pivoted for an upward and rearward operative stroke, a toggle comprising two pivotally connected members of which one has a pivotal connection with the type bar, a swingable link portion having a pivotal connection with the other of said toggle members, said link portion being swingable downwardly from its normal position of rest and rearwardly, a key bar having a connection with said toggle and operable to move the toggle members from a normally collapsed downwardly extending position to a relatively straightened position and to impart to the type bar a terminally checked throw to a position slightly in advance of striking position, said connection [illegible] on the type bar [illegible] and terminally [illegible] of said connection [illegible] the stroke of the type bar through [illegible]

29. In a typewriter, a type bar pivoted for an upward and rearward operative stroke, a toggle comprising two pivotally connected members of which one has a pivotal connection with the type bar, a swingable link portion having a pivotal connection with the other of said toggle members, said link portion being swingable downwardly from its normal position of rest and rearwardly, a key bar having a connection with said toggle and operable to move the toggle members from a normally collapsed downwardly extending position to a relatively straightened position and to impart to the type bar a terminally checked throw to a position slightly in advance of striking position, said connection [illegible] on the type bar [illegible] and terminally [illegible] of said connection [illegible] the stroke of the type bar through [illegible]

30. In a typewriter, a type bar pivoted for an upward and rearward operative stroke, a toggle comprising two pivotally connected members of which one has a pivotal connection with the type bar, a swingable link portion having a pivotal connection with the other of said toggle members, said link portion being swingable downwardly from its normal position of rest and rearwardly, a key bar having a connection with said toggle and operable to move the toggle members from a normally collapsed downwardly extending position to a relatively straightened position and to impart to the type bar a terminally checked throw to a position slightly in advance of striking position, said connection [illegible] on the type bar [illegible] and terminally [illegible] of said connection [illegible] the stroke of the type bar through [illegible]

ment of the type bar toward the platen, means for checking movement of the type bar toward the platen prior to the bar coming into printing relation to the platen, and including a member connected to the type bar and pivotally supported in advance of the platen, and supplemental means, actuated by the key lever after the movement of the type bar has been checked, for rocking said pivotally mounted member to effect completion of the movement of the type bar toward the platen.

19. In a typewriting machine, the combination of a platen, a depressible key lever, a pivoted type bar, means controlled by depression of the key lever for effecting movement of the type bar toward the platen, means movable with the type bar for checking such pivotal movement of the type bar prior to the bar coming into printing relation to the platen, and supplemental means providing a positive connection between the key lever and type bar, after such movement of the type bar has been checked, and effecting completion of the movement of the type bar toward the platen.

20. In a typewriting machine, the combination of a platen, a type carrier movable to and from printing relation with the platen, and means for moving the type carrier into printing relation to the platen including a normally collapsed toggle, the straightening of which acts to check movement of the type carrier prior to the latter's contacting with the platen, and means for moving the toggle substantially in the direction of its length to complete the printing movement of the type carrier.

21. In a typewriting machine, the combination of a platen, a type carrier movable to and from printing relation with the platen, and means for moving the type carrier into printing relation to the platen including a normally collapsed toggle, the straightening of which acts to check movement of the type carrier prior to the latter's contacting with the platen, and a rocking member connected with and adapted to supplement the action of the toggle to complete printing movement of the type carrier.

22. In a typewriting machine, the combination of a platen, a type carrier movable to and from printing relation with the platen, and means for moving the type carrier into printing relation to the platen including a normally collapsed toggle, one member of which is adapted to move the type carrier as the toggle is expanded, a pivotally mounted support for the other toggle member, and means whereby the support is rocked to supplement the action of the toggle in completing printing movement of the type carrier.

23. In a typewriter, a type bar pivoted for an upward and rearward operative swing, a toggle comprising two pivotally connected members of which one has a pivotal connection with the type bar, a swingable link portion having a pivotal connection with the other of said toggle members, said link portion being swingable downwardly from its normal position of rest and rearwardly, a key bar operable to move the toggle members from a normally collapsed downwardly extending position to a relatively straightened position and to impart to the type bar a terminally checked throw to a position slightly in advance of striking position, and means thereupon effective to operatively swing said link portion to complete the stroke of the type bar through said toggle.

24. In a typewriter, a type bar pivoted for an upward and rearward operative stroke, a toggle comprising two pivotally connected members of which one has a pivotal connection with the type bar, a swingable link portion having a pivotal connection with the other of said toggle members, said link portion being swingable downwardly from its normal position of rest and rearwardly, a key bar having a connection with said toggle and operable to move the toggle members from a normally collapsed downwardly extending position to a relatively straightened position and to impart to the type bar a terminally checked throw to a position slightly in advance of striking position, and means external of said connection thereupon effective to swing said link portion to complete the stroke of the type bar through said toggle.

25. In a typewriter, a type bar pivoted for an upward and rearward operative swing, a toggle comprising two pivotally connected members of which one has a pivotal connection with the type bar, a swingable link portion having a pivotal connection with the other of said toggle members, said link portion being swingable downwardly from its normal position of rest and rearwardly, a key bar operable to move the toggle members from a normally collapsed downwardly extending position to a relatively straightened position and to impart to the type bar a terminally checked throw to a position slightly in advance of striking position, means thereupon effective to operatively swing said link portion to complete the stroke of the type bar through said toggle, and power-storing means tending to restore said link portion.

26. In a typewriter, a type bar pivoted for an upward and rearward operative stroke, a toggle comprising two pivotally connected members of which one has a pivotal connection with the type bar, a swingable link portion having a pivotal connection with the other of said toggle members, said link portion being swingable downwardly from its normal position of rest and rearwardly, a key bar having a connection with said toggle and operable to move the toggle members from a normally collapsed downwardly extending position to a relatively straightened position and to impart to the type bar a terminally checked throw to a position slightly in advance of striking position, means external of said connection thereupon effective to swing said link portion to complete the stroke of the type bar through said toggle, and power-storing means tending to restore said link portion.

27. In a typewriter, a type bar pivoted for an upward and rearward operative stroke, a toggle comprising two pivotally connected members of which one has a pivotal connection with the type bar, a swingable link portion having a pivotal connection with the other of said toggle members, said link portion being swingable downwardly from its normal position of rest and rearwardly, a key bar having a connection with said toggle and operable to move the toggle members from a normally collapsed downwardly extending position to a relatively straightened position and to impart to the type bar a terminally checked throw to a position slightly in advance of striking position, said connection including means acting on the type bar exclusively of the toggle during said terminally checked throw, and means external of said connection thereupon effective to swing said link portion to complete the stroke of the type bar through said toggle.

28. In a typewriter, a type bar pivoted for an upward and rearward operative stroke, a toggle comprising two pivotally connected members of

which one has a pivotal connection with the type bar, a swingable link portion having a pivotal connection with the other of said toggle members, said link portion being swingable downwardly from its normal position of rest and rearwardly, a key bar having a connection with said toggle and operable to move the toggle members from a normally collapsed downwardly extending position to a relatively straightened position and to impart to the type bar a terminally checked throw to a position slightly in advance of striking position, said connection including means acting on the type bar exclusively of the toggle during said terminally checked throw, means external of said connection thereupon effective to swing said link portion to complete the stroke of the type bar through said toggle, and power-storing means tending to restore said link portion.

CARL A. JOERISSEN.

125

Feb. 23, 1932.

C. A. JOERISSEN

1,846,339

TYPEWRITING MACHINE

Filed March 22, 1926 3 Sheets-Sheet 1

Fig. 1.

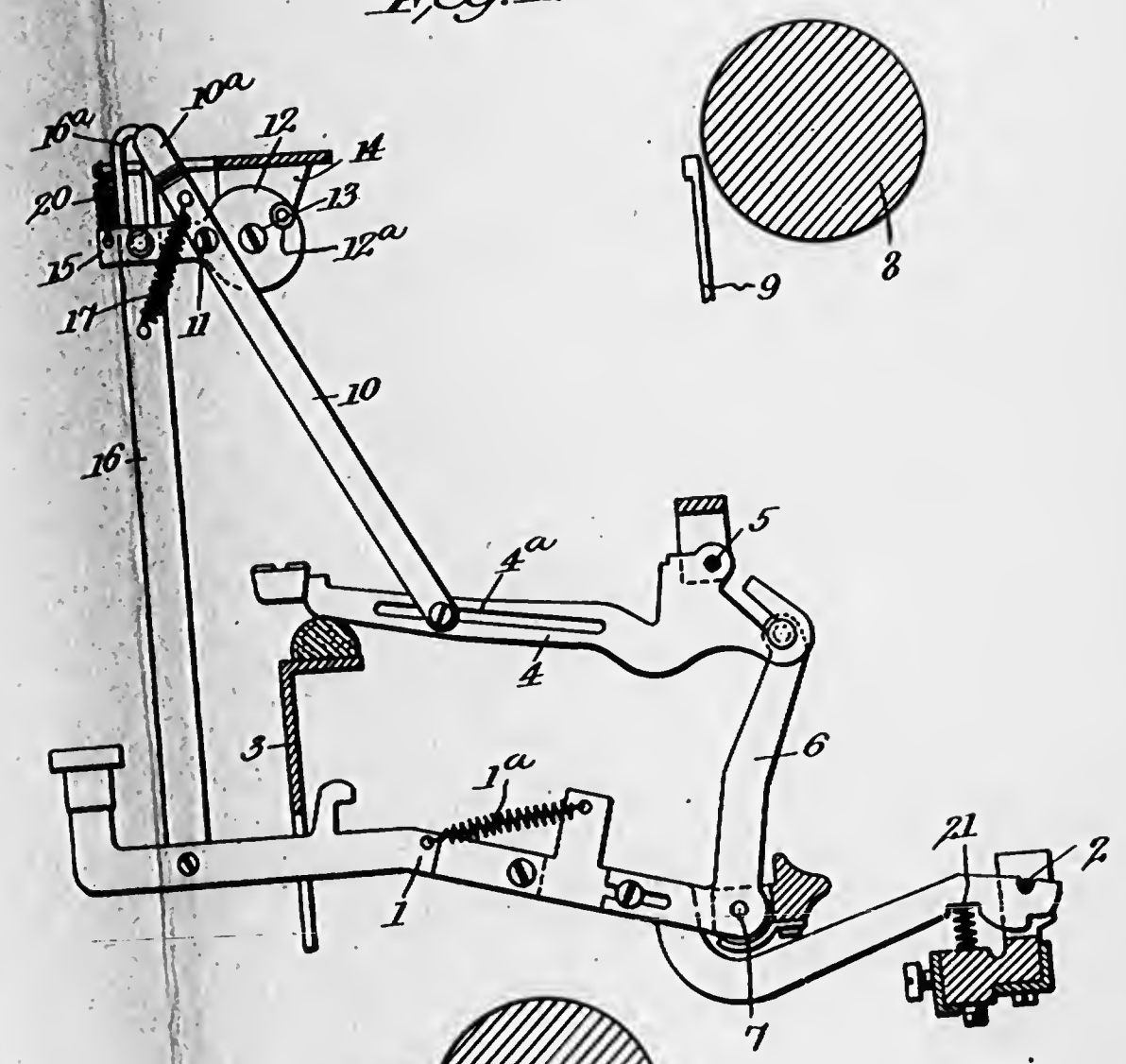

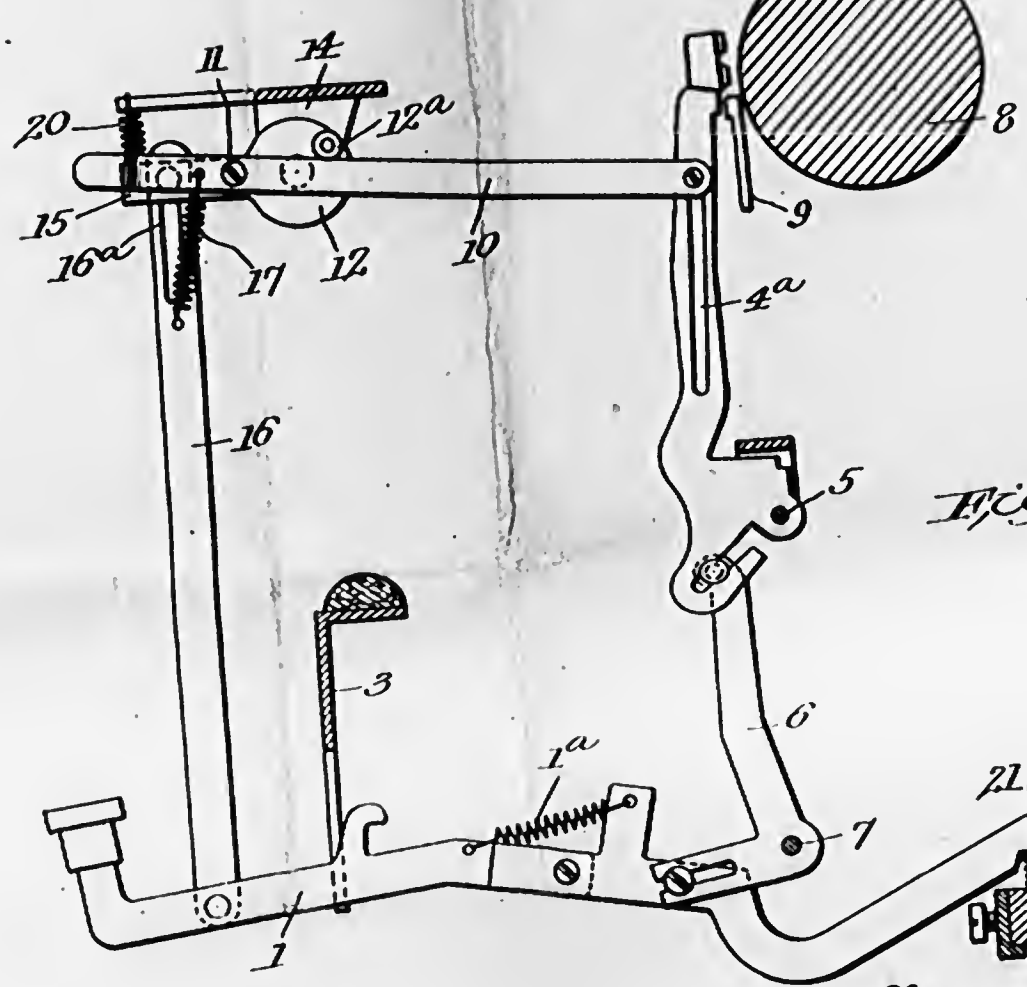

Fig. 2.

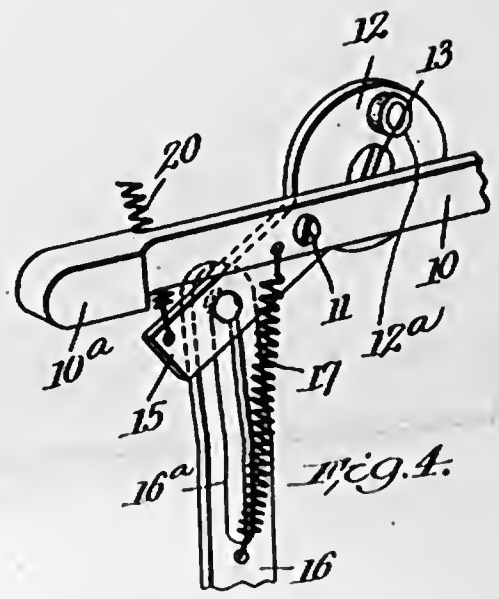

Fig. 4.

Inventor

Carl A. Joerissen.

By Cushman, Darby & Cushman

Attorneys

126

Feb. 23, 1932. C. A. JOERISSEN 1,846,339

TYPEWRITING MACHINE

Filed March 22, 1926 3 Sheets-Sheet 2

Fig. 3.

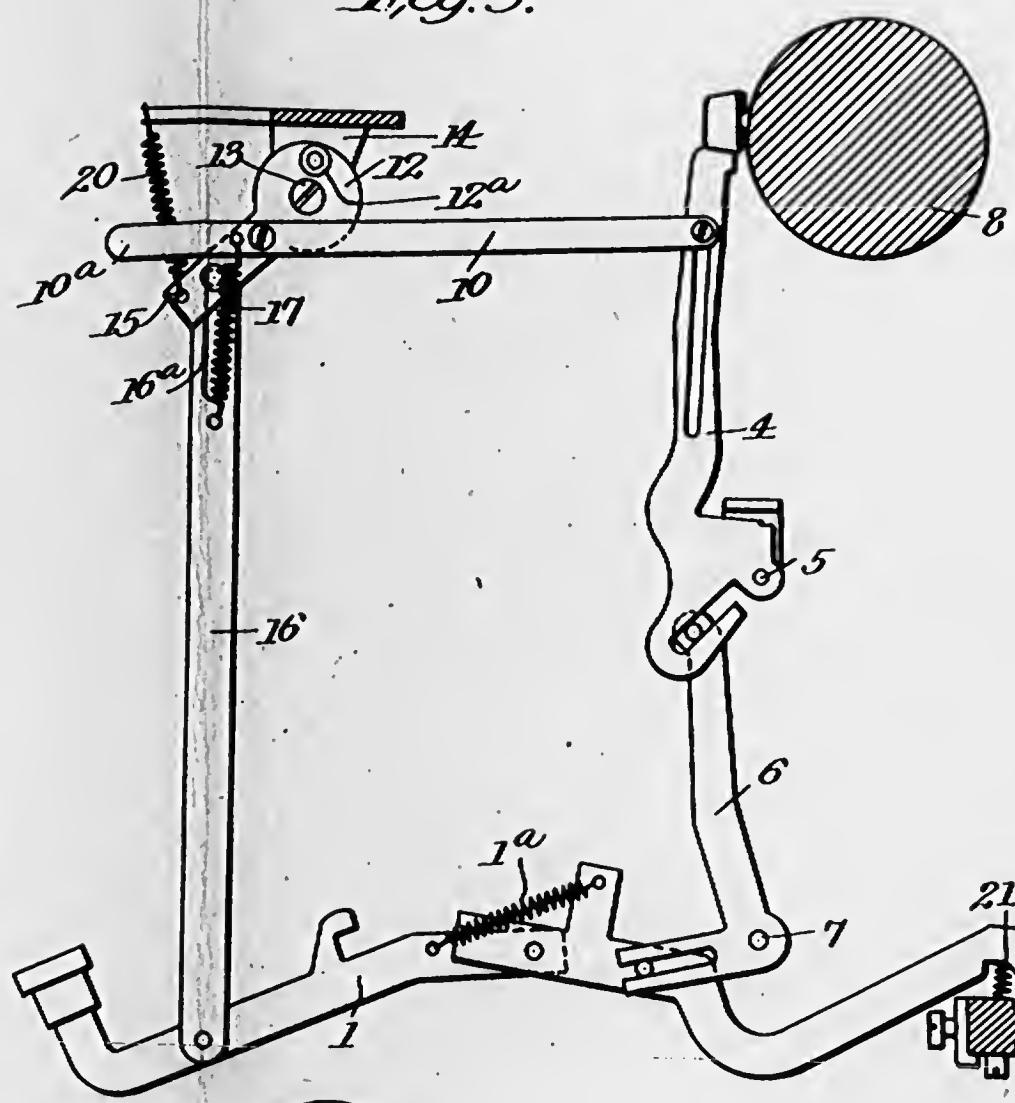

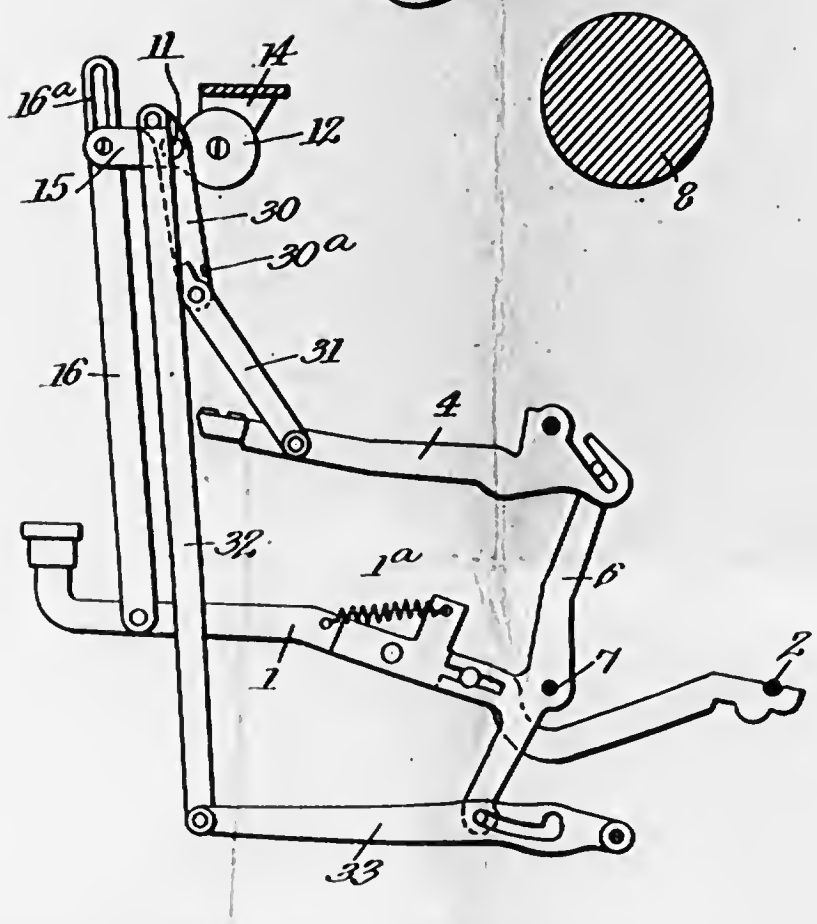

Fig. 5.

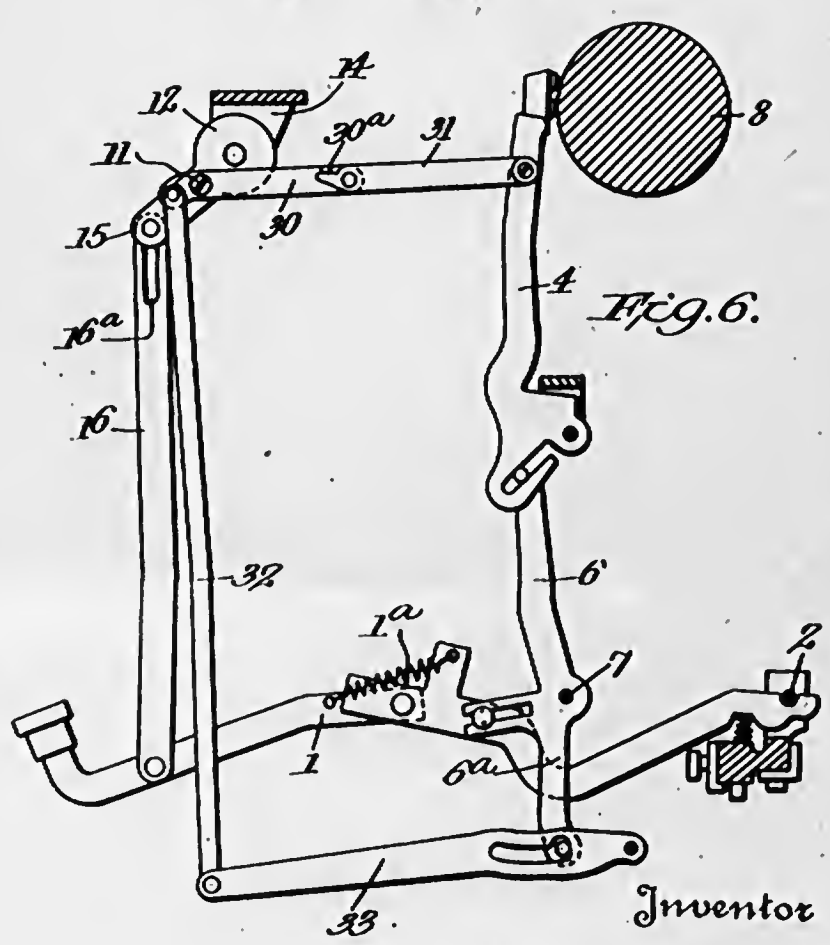

Fig. 6.

Inventor
Carl A. Joerissen.

By Coulman, Bryant & Darby
Attorneys

127

Feb. 23, 1932. C. A. JOERISSEN 1,846,339

TYPEWRITING MACHINE

Filed March 22, 1926 3 Sheets-Sheet 3.

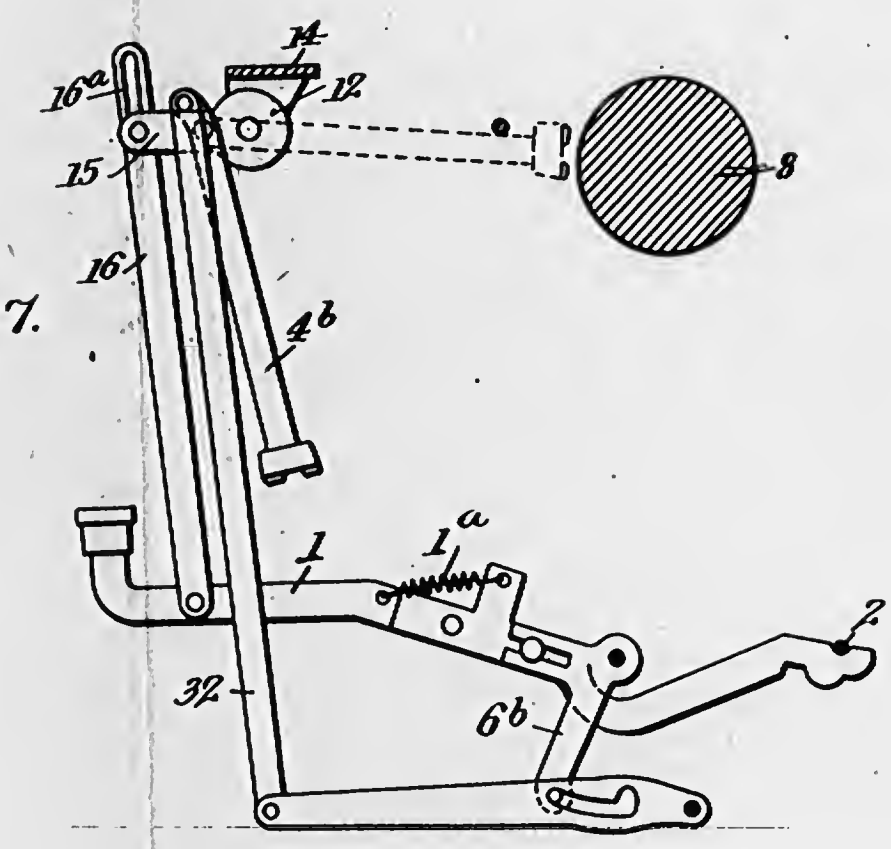

Fig. 7.

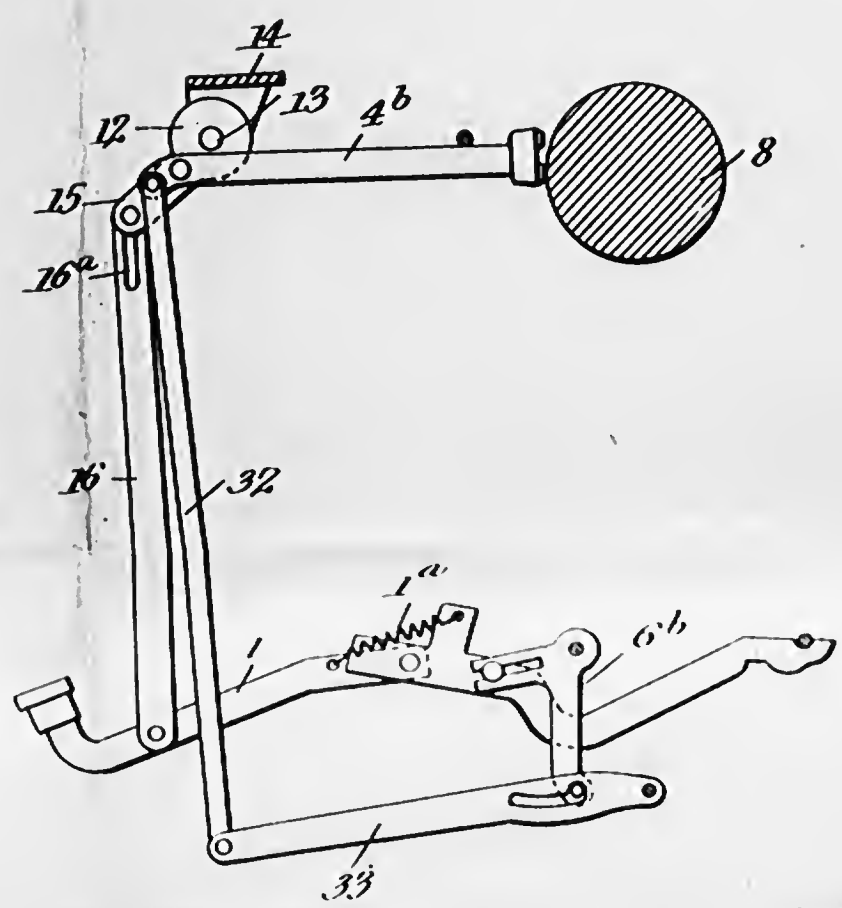

Fig. 8.

Inventor
Carl A. Joerissen,
By Lemelman, Dugan & Darby
Attorneys

Patented Feb. 23, 1932 1,846,339

UNITED STATES PATENT OFFICE

CARL A. JOERISSEN, OF WASHINGTON, DISTRICT OF COLUMBIA

TYPEWRITING MACHINE

REISSUED

Application filed March 22, 1926. Serial No. 96,602.

The present invention relates to improvements in typewriting machines, and particularly to means whereby the operation of such a machine is effected with a minimum amount of noise.

Particularly the object of the invention is to overcome the objectionable noise produced by the type bars striking the platen and to provide a key action whereby the type bars will be forced into printing relation with the platen by a positive movement, securing clear impressions, but without forcibly striking the platen.

I am aware that it has been heretofore proposed to provide typewriter key actions in which the noise produced by the type bars striking the platen will be materially reduced, but by the present invention the movement of all the parts is positively effected through connections with the key lever, and without the necessity of employing auxiliary parts for imparting movement to the type bars.

While the invention hereinafter described may be employed in connection with typewriting machines having type bars of various forms and supported in different relations with regard to the printing roll or platen, I have illustrated embodiments thereof in connection with a type action, in which the type bars are pivotally supported and adapted to move upward and rearward into printing relation with a relatively elevated platen.

In the accompanying drawings:—

Figure 1 is an elevation of a typewriter key action embodying the present invention, certain parts of the machine being shown in section and the type bar being in its normal inactive position.

Figure 2 is a similar view showing the position of parts when the key lever has been partly depressed and the movement of the type bar toward printing relation with the platen checked.

Figure 3 is a similar view showing the relation of the parts on the completion of the depression of the key lever and the movement of the type bar into printing relation with the platen.

Figure 4 is a detail, on a slightly enlarged scale, of a portion of the connection between the key lever and the type bar checking means.

Figures 5 and 6 are elevational views of a modification showing the parts, respectively, in the positions assumed when the type bar is at rest and in printing relation to the platen.

Figures 7 and 8 are views, respectively similar to Figures 5 and 6, of a slightly modified form of key action, embodying the invention.

In the drawings many of the parts are shown more or less conventionally, and the views are, to a considerable extent, diagrammatic. There can, of course, be material variation as regards proportions and sizes of the several parts, and also considerable modification in many of the details without departing from the invention. Except where specifically referred to in the appended claims, it is not intended to limit the invention to the exact details shown, and the drawings are to be considered illustrative rather than restrictive of the invention.

In Figures 1 to 6 inclusive, I have illustrated the invention as embodied in a key action mechanism of substantially the type employed in the well known Underwood typewriting machine comprising a key lever 1 fulcrumed at its rear end upon a rod 2, and extending through slots in a comb plate or frame member 3. The type bar 4 is pivotally mounted upon a rod 5, which is of arc shape so that the several type bars of the machine lie in the form of a transversely curved basket.

Movement of the key lever 1 is transmitted to the type bar 4 by a sub-lever 6, fulcrumed at 7 on the machine frame. When the forward, outer, end of the key lever 1 is depressed, the type bar 4 will be caused to swing upward and rearward about its pivot 5 into printing relation with the platen 8 and the usual type guide 9 in the manner well understood.

In the drawings I have only illustrated a single key action, and it will be understood that this is to be duplicated throughout the series of type bars in the ordinary manner.

10 designates a link which is pivotally sup-

ported at an intermediate point of its length, and has one end connected to the type bar 4. As shown, the pivot 11 of the link 10 is carried by a pivotally mounted fulcrum support 12, which is supported to rock about an axis 13 extending through the members of a depending comb plate or frame section 14. The fulcrum support 12 is provided with a forward extension 15 that engages a link or rod 16 extending upward from and pivotally connected at its lower end to the key lever 1.

The link or member 10 is eccentrically mounted on the fulcrum support 12, and it will be seen that as the type bar swings upward from its normal inactive position represented in Figure 1 to the substantially vertical position shown in Figure 2, such member will be brought into such relation to the axis 13 of the fulcrum support and said bar as to check the swinging movement of the type bar just prior to its coming into contact with the platen.

The engagement of the link or rod 16 with the extension 15 of the fulcrum support 12 will, as the key lever continues to move downward from the position shown in Figure 2, cause a bodily rocking of the fulcrum support about the axis 13, thus moving the connecting member 10 in the direction of its length and positively forcing the type bar toward the platen, completing its movement into printing relation therewith.

As shown in Figures 1 to 3, the stem of the type bar 4 is provided with a longitudinally extending slot 4*a* into which projects a pin or stud at the inner end of the link or checking member 10, and a spring 17 connects the checking member 10, at the opposite side of its fulcrum 11 from the type bar, with the connecting link or rod 16 that extends upward from the key lever 1. The outer end of the link or checking member 10 may be slightly weighted, as indicated at 10*a*, so that this member will offer practically no resistance to the initial upward and rearward swinging movement of the type bar.

As shown, the link or connecting rod 16 has formed therein adjacent its upper end a longitudinal slot 16*a* which receives a pin projecting laterally from the forward extension 15 of the pivotally mounted fulcrum support 12 and these parts are so related that the upper end of said slot 16*a*, will engage said pin on the fulcrum support substantially at the moment that the movement of the type bar into printing relation with the platen is checked as before described, at which time the connection of the checking member 10 with the type bar and the fulcrum 11 are in substantial horizontal alignment with the axis 13 of the fulcrum support.

Therefore, while the movement of the type bar toward printing relation with the platen will be checked there will be no material interference with downward movement of the key lever and the completion of the movement of the type bar into printing relation with the platen will be effected by a positive force exerted by pull of the link 16 on the extension 15 and a consequent movement in the direction of the length of the connecting member 10.

A spring 20 may be interposed between a portion of the typewriter frame, and the extension 15 of each fulcrum support to assist in returning the parts to normal position, the machine, of course, including the usual springs 21 for lifting the key levers after the same are relieved from pressure. As shown, the key levers 1 are of the common form including two pivotally connected sections having a coil spring 1*a* interposed between them, whereby the checking of the upward and rearward swinging movement of the type bar will not interfere with the downward movement of the key and outer end of the key lever through the required stroke.

If desired, each fulcrum support 12 may be provided with a short lateral projection 12*a*, which will extend over the upper edge of the checking member 10 when the parts are in the position shown in Figures 2 and 3, and, under the pull exerted by the spring 20 will assist in starting the turning movement of said checking member about its fulcrum so that it will not in any way interfere with the return of the type bar to its normal inactive position.

In the embodiment of the invention illustrated in Figures 5 and 6, the means for checking the movement of the type bar toward printing relation with the platen includes a toggle, one member 30 of which is fulcrumed on the pivotally mounted fulcrum support 12, and the other member 31 of which is pivotally connected to the type bar 4. The forward end of the toggle member 30 is connected by a link 32 with a lever 33, which is arranged below the plane of the key lever 1, and is adapted to be rocked about its fulcrum 34 by the movement of a downwardly extending arm 6*a* of the sub-lever 6.

With this arrangement it will be seen that as the type bar moves from its normal inactive position shown in Figure 5 upward and rearward toward the platen 8, the members 30, 31, of the toggle will come into a substantially straight line relation, thus checking the movement of the type bar, and when the fulcrum support 12 is rocked about its pivotal axis the toggle will exert a positive push upon the type bar, completing the movement thereof into printing relation with the platen. The final operative swing of the fulcrum support is permitted by the pin of the pin and slot connection between members 6*a* and 33 coming under the upward enlargement at the right end of the slot (Fig. 6).

That part of the fulcrum support between its swinging axis and the screw 11 constitutes a link portion swingable downwardly from its normal position of rest and rearwardly to complete the stroke of the type bar. The fulcrum support being thus normally poised, its inertia is overcome with the least possible effort. Spring 1*a* in straightening the key bar moves link 16 upwardly to restore the fulcrum support, the usual key bar return spring assisting in this action.

A suitable stop 30*a* may be provided about the pivotal connection between the toggle members 30, 31, to prevent any possibility of this connection being moved upward beyond that in which the toggle members are in substantially straight line relation, as shown in Figure 6.

In the embodiment of the invention illustrated in Figures 7 and 8 the type bar, 4*b*, is pivoted directly to the pivotally mounted fulcrum support 12 and the outer end thereof is connected by the link 32 with the lever 33.

A sub-lever 6*b* is interposed between the key lever 1 and the lever 33, so that the initial depression of the key lever will actuate the lever 33 and through its connection with the type bar swing the latter into alignment with the type guide 9 and the platen 8.

The extent of movement permitted the lever 33 is such that swinging movement of the type bar will be checked as said bar comes into substantial alignment with the axis of the fulcrum support 12 and the pivotal connection of the bar with said support.

The length of the type bar is such, and it is so related to the other parts, that with the several members in the relation described the printing head on the type bar will not touch the platen. However, as the fulcrum support 12 is rocked by the positive pull exerted through the connection 16, as the downward movement of the key lever continues, the type bar will receive a slight movement substantially in the direction of its length which will complete the movement of said bar into printing relation with the platen.

It is believed that the operation and advantages of the invention will be readily understood from the foregoing description in connection with the drawings. It will be seen that the invention provides a very simple means for preventing the sudden striking of the type bars against the platen, which is the cause of the objectionable noise incident to operating such machines. By the arrangement of parts described, the movement of the type bar into printing relation with the platen is checked and the completion of such movement is caused by a positive connection between the key lever and the type bar.

It will be seen that whether a special checking means made as a single member extending continuously from its pivotal connection with the fulcrum support 12 to the type bar or in the form of a toggle, as illustrated in Figures 5 and 6, is interposed between the fulcrum support and the type bar or the latter is pivotally connected directly to said support the turning of said support which effects the completion of the type bar movement to printing relation with the platen is due to a positive connection with the key lever.

In the drawings I have illustrated a key action located approximately at the middle, transversely, of the machine and wherein the link connections 16 and 32 may be perfectly straight, one piece, elements. The corresponding parts of key actions situated at or nearer the ends or sides of the type bar basket will, of course, have to be slightly modified, the exact form of each said connection depending upon the location of the particular key action in the machine.

However, in all instances there is a positive connection between the key lever and the fulcrum support for the checking means for rocking said support and effecting a movement in the direction of the length of said means for effecting completion of the movement of the type bar to printing relation to the platen.

Having thus described the invention, what is claimed as new is:—

1. In a typewriting machine, the combination of a platen, a key lever, a type bar movable to and from printing relation with the platen, means controlled by actuation of the key lever for effecting initial movement of the type bar toward the platen, means for checking the movement of the type bar toward the platen including a pivotally mounted member connected to the type bar, and means for connecting the key lever and said pivotally mounted member during a portion of an operative movement of the key lever for positively moving said member to effect completion of a movement of the type bar toward the platen.

2. In a typewriting machine, the combination of a platen, a depressible key lever, a pivotal type bar mounted to swing upward and rearward into printing relation with the platen, means controlled by actuation of the key lever for effecting initial movement of the type bar toward the platen, means for checking the movement of the type bar toward the platen including a pivotally mounted member connected to and extending forward from the type bar, and means for establishing a connection between the key lever and said pivotally mounted member for positively moving said member to effect completion of a movement of the type bar toward the platen.

3. In a typewriting machine, the combination of a platen, a key lever, a type bar movable to and from printing relation with the platen, means controlled by actuation of

the key lever for effecting initial movement of the type bar toward the platen, means for checking the movement of the type bar toward the platen prior to its coming into printing relation to the platen including a member pivotally supported in advance of the platen and connected to the type bar, and means connected with the key-lever for moving said member about its pivotal support, after the movement of the type bar has been checked, to effect completion of a movement of the type bar to printing relation with the platen.

4. In a typewriting machine, the combination of a platen, a depressible key lever, a type bar movable to and from printing relation to the platen, means controlled by depression of the key lever for effecting initial movement of the type bar toward the platen, means for checking such movement of the type bar including a member connected to said bar and extending at an angle to the length of the bar when its movement toward the platen is checked, and means including a member extending upward from the key lever for positively actuating said first mentioned member to effect completion of movement of the type bar into printing relation with the platen.

5. In a typewriting machine, the combination of a platen, a depressible key lever, a type bar movable to and from printing relation to the platen, means controlled by depression of the key lever for effecting initial movement of the type bar toward the platen, means for checking such movement of the type bar including a member connected to said bar and extending substantially at right angles to the length of the bar when its movement toward the platen is checked, and means adapted to be positively actuated by the key lever for imparting a substantially longitudinal movement to said member to effect completion of movement of the type bar into printing relation to the platen.

6. In a typewriting machine, the combination of a platen, a key lever, a type bar movable to and from printing relation with the platen, means controlled by actuation of the key lever for effecting initial movement of the type bar toward the platen, means for checking the movement of the type bar toward the platen, prior to its coming into printing relation to the platen and including a pivotally mounted member connected to the type bar, and supplemental means connected with the key lever and adapted to positively rock said pivotal member during the latter portion of an operative movement of the key lever to effect completion of movement of the type bar into printing relation to the platen.

7. In a typewriting machine, the combination of a platen, a key lever, a type bar movable to and from printing relation with the platen, means controlled by actuation of the key lever for effecting initial movement of the type bar toward the platen, means for checking the movement of the type bar toward the platen including a pivotally mounted member connected to the type bar, a pivotally mounted fulcrum support for said member, and means for connecting the key lever and said fulcrum support whereby downward movement of the key after movement of the type bar has been checked will rock said fulcrum support and move said member in the direction of its length to effect completion of movement of the type bar into printing relation to the platen.

8. In a typewriting machine, the combination of a platen, a key lever, a type bar movable to and from printing relation with the platen, means controlled by actuation of the key lever for effecting initial movement of the type bar toward the platen, means for checking the movement of the type bar toward the platen including a pivotally mounted member connected to the type bar, a pivotally mounted fulcrum support for said member, and a rod extending upward from the key lever and adapted as the key is depressed beyond the position assumed when movement of the type bar toward the platen is checked to engage and positively rock the fulcrum support to move said member in the direction of its length to effect completion of movement of the type bar into printing relation to the platen.

9. In a typewriting machine, the combination of a platen, a depressible key lever, a pivoted type bar adapted to swing upward and rearward into printing relation to the platen, a sub-lever interposed between the key-lever and type bar and adapted to effect initial movement of the type bar toward the platen as the key lever is depressed, means for checking such movement of the type bar including a member connected to the type bar and extending substantially horizontally therefrom when movement of the type bar is checked, and a rod extending upward from the key lever and adapted, as said lever is depressed beyond the position assumed when movement of the type bar is checked, to move said member in the direction of its length to effect completion of the movement of the type bar to printing relation to the platen.

10. In a typewriting machine, the combination of a platen, a depressible key lever, a pivoted type bar adapted to swing upward and rearward into printing relation to the platen, a sub-lever interposed between the key-lever and type bar and adapted to effect initial movement of the type bar toward the platen as the key lever is depressed, means for checking such movement of the type bar including a pivotally mounted member connected to the type bar and projecting laterally therefrom when movement of the type bar is checked, a pivotal fulcrum support for said

member, and means actuated by depressing the key lever beyond the position assumed when movement of the type bar is checked for positvely moving the fulcrum support of said member to cause the latter to effect completion of movement of the type bar into printing relation to the platen.

11. In a typewriting machine, the combination of a platen, a key lever, a type bar movable to and from printing relation with the platen, means controlled by actuation of the key lever for effecting initial movement of the type bar toward the platen, means for checking the movement of the type bar toward the platen prior to its coming into printing relation to the platen and including a pivotally mounted member connected to the type bar, and a connecting means extending upward from the key lever and adapted as the key lever is depressed beyond the position assumed when movement of the type bar is checked to engage and positively rock said pivotally mounted member to effect completion of movement of the type bar to printing relation to the platen.

12. In a typewriting machine, the combination of a platen, a key lever, a pivotally mounted type bar, means controlled by actuation of the key lever for effecting initial swinging movement of the type bar toward the platen, means connected to and moving with the type bar for checking movement of such bar toward the platen prior to its coming into printing relation to the platen, and supplemental means positively actuated by the key lever, after the movement of the type bar has been checked, for effecting completion of movement of the type bar to printing relation to the platen in a substantially straight line direction.

13. In a typewriting machine, the combination of a platen, a key lever, a type bar movable to and from printing relation with the platen, means controlled by actuation of the key lever for effecting initial movement of the type bar toward the platen, means for checking the movement of the type bar toward the platen prior to its reaching printing relation to the platen including a link-like member pivotally supported in advance of the platen and having its rear end connected to the type bar, and means connected with the key-lever for moving the link relative to its pivotal support to effect completion of a movement of the type bar toward the platen.

14. In a typewriting machine, the combination of a platen, a key lever, a type bar movable to and from printing relation with the platen, means controlled by actuation of the key lever for effecting initial movement of the type bar toward the platen, means for checking the movement of the type bar toward the platen, including a pivotally mounted member connected to the type bar, and supplemental means connected with the key lever and adapted to positively shift the fulcrum of said pivotal member during the latter portion of an operative movement of the key lever to move said member in the direction of its length to effect completion of movement of the type bar into printing relation to the platen.

15. In a typewriting machine, the combination of a platen, a type carrier mounted to swing upward to printing relation to the platen, means for checking movement of the type carrier toward the platen prior to the carrier coming into printing relation to the platen including a pivotally mounted member which remains stationary until said movement of the type carrier is checked and is thereafter bodily rocked to effect completion of movement of the type carrier to printing relation to the platen, a key lever, and means actuated by operation of the key lever for effecting successively movement of the type carrier and said pivotally mounted member.

16. In a typewriting machine, the combination of a platen, a depressible key lever, a type bar movable to and from printing relation with the platen, means controlled by depression of the key lever for effecting movement of the type bar toward the platen, means for checking such movement of the type bar prior to its reaching printing relation with the platen, including a pivotally mounted member connected with the type bar, and means, actuated by movement of the key lever after the movement of the type bar has been checked, for rocking said pivotally mounted member to effect completion of movement of the type bar into printing relation to the platen.

17. In a typewriting machine, the combination of a platen, a key lever, a pivotally mounted type bar movable to and from printing relation with the platen, means controlled by actuation of the key lever for effecting movement of the type bar toward the platen, means for checking such movement of the type bar prior to its reaching printing relation with the platen, including a pivotally mounted member connected with the type bar, and supplemental means, actuated by the key lever after the movement of the type bar has been checked, for rocking said pivotal member and effecting completion of the movement of the type bar towards the platen.

18. In a typewriting machine, the combination of a platen, a key lever, a type bar movable to and from printing relation with the platen, means actuated during the first portion of an operative movement of the key lever for effecting movement of the type bar toward the platen, means for checking movement of the type bar toward the platen prior to the bar coming into printing relation to the platen, and including a member connected to the type bar and pivotally supported in advance of the platen, and supplemental

means, actuated by the key lever after the movement of the type bar has been checked, for rocking said pivotally mounted member to effect completion of the movement of the type bar toward the platen.

19. In a typewriting machine, the combination of a platen, a depressible key lever, a pivoted type bar, means controlled by depression of the key lever for effecting movement of the type bar toward the platen, means movable with the type bar for checking such pivotal movement of the type bar prior to the bar coming into printing relation to the platen, and supplemental means providing a positive connection between the key lever and type bar, after such movement of the type bar has been checked, and effecting completion of the movement of the type bar toward the platen.

20. In a typewriting machine, the combination of a platen, a type carrier movable to and from printing relation with the platen, and means for moving the type carrier into printing relation to the platen including a normally collapsed toggle, the straightening of which acts to check movement of the type carrier prior to the latters contacting with the platen, and means for moving the toggle substantially in the direction of its length to complete the printing movement of the type carrier.

21. In a typewriting machine, the combination of a platen, a type carrier movable to and from printing relation with the platen, and means for moving the type carrier into printing relation to the platen including a normally collapsed toggle, the straightening of which acts to check movement of the type carrier prior to the latters contacting with the platen, and a rocking member connected with and adapted to supplement the action of the toggle to complete printing movement of the type carrier.

22. In a typewriting machine, the combination of a platen, a type carrier movable to and from printing relation with the platen, and means for moving the type carrier into printing relation to the platen including a normally collapsed toggle, one member of which is adapted to move the type carrier as the toggle is expanded, a pivotally mounted support for the other toggle member, and means whereby the support is rocked to supplement the action of the toggle in completing printing movement of the type carrier.

23. In a typewriter, a type bar pivoted for an upward and rearward operative swing, a toggle comprising two pivotally connected members of which one has a pivotal connection with the type bar, a swingable link portion having a pivotal connection with the other of said toggle members, said link portion being swingable downwardly from its normal position of rest and rearwardly, a key bar operable to move the toggle members from a normally collapsed downwardly extending position to a relatively straightened position and to impart to the type bar a terminally checked throw to a position slightly in advance of striking position, and means thereupon effective to operatively swing said link portion to complete the stroke of the type bar through said toggle.

24. In a typewriter, a type bar pivoted for an upward and rearward operative stroke, a toggle comprising two pivotally connected members of which one has a pivotal connection with the type bar, a swingable link portion having a pivotal connection with the other of said toggle members, said link portion being swingable downwardly from its normal position of rest and rearwardly, a key bar having a connection with said toggle and operable to move the toggle members from a normally collapsed downwardly extending position to a relatively straightened position to impart to the type bar a terminally checked throw to a position slightly in advance of striking position, and means external of said connection thereupon effective to swing said link portion to complete the stroke of the type bar through said toggle.

25. In a typewriter, a type bar pivoted for an upward and rearward operative swing, a toggle comprising two pivotally connected members of which one has a pivotal connection with the type bar, a swingable link portion having a pivotal connection with the other of said toggle members, said link portion being swingable downwardly from its normal position of rest and rearwardly, a key bar operable to move the toggle members from a normally collapsed downwardly extending position to a relatively straightened position and to impart to the type bar a terminally checked throw to a position slightly in advance of striking position, means thereupon effective to operatively swing said link portion to complete the stroke of the type bar through said toggle, and power-storing means tending to restore said link portion.

26. In a typewriter, a type bar pivoted for an upward and rearward operative stroke, a toggle comprising two pivotally connected members of which one has a pivotal connection with the type bar, a swingable link portion having a pivotal connection with the other of said toggle members, said link portion being swingable downwardly from its normal position of rest and rearwardly, a key bar having a connection with said toggle and operable to move the toggle members from a normally collapsed downwardly extending position to a relatively straightened position to impart to the type bar a terminally checked throw to a position slightly in advance of striking position, means external of said connection thereupon effective to swing said link portion to complete the stroke of the type bar through said toggle, and

power-storing means tending to restore said link portion.

27. In a typewriter, a type bar pivoted for an upward and rearward operative stroke, a toggle comprising two pivotally connected members of which one has a pivotal connection with the type bar, a swingable link portion having a pivotal connection with the other of said toggle members, said link portion being swingable downwardly from its normal position of rest and rearwardly, a key bar having a connection with said toggle and operable to move the toggle members from a normally collapsed downwardly extending position to a relatively straightened position to impart to the type bar a terminally checked throw to a position slightly in advance of striking position, said connection including means acting on the type bar exclusively of the toggle during said terminally checked throw, and means external of said connection thereupon effective to swing said link portion to complete the stroke of the type bar through said toggle.

28. In a typewriter, a type bar pivoted for an upward and rearward operative stroke, a toggle comprising two pivotally connected members of which one has a pivotal connection with the type bar, a swingable link portion having a pivotal connection with the other of said toggle members, said link portion being swingable downwardly from its normal position of rest and rearwardly, a key bar having a connection with said toggle and operable to move the toggle members from a normally collapsed downwardly extending position to a relatively straightened position to impart to the type bar a terminally checked throw to a position slightly in advance of striking position, said connection including means acting on the type bar exclusively of the toggle during said terminally checked throw, means external of said connection thereupon effective to swing said link portion to complete the stroke of the type bar through said toggle, and power-storing means tending to restore said link portion.

In testimony whereof I have hereunto set my hand.

CARL A. JOERISSEN.

194/25

NUMBER (Series of 1925)

(7) 702611

DIV. 41

1933

REISSUE NO. 19076

DATED FEB 13 1934

(EX'R'S Book) R 178-14

Division of Original Patent No. ....., granted ....., 193

Name CARL A. JOERISSEN

of WASHINGTON, D. C.

~~State of~~ DISTRICT OF COLUMBIA

Invention TYPEWRITING MACHINE

APPLICATION FILED COMPLETE, DEC 15, 1933

PARTS OF APPLICATION FILED: Petition, Specification, Oath, Fee $30, Old Patent, Abstract of Title, 3 Sheets Drawings, ORDERED DEC 15, 1933

Original Patent No. 1,846,339 Date FEB. 23, 1932

Examined and Passed for Issue Mark L. Whitney Exr. Div. 41 Jan. 10, 1934

Notice of Allowance Jan. 10, 1934 By Commissioner.

Attorney CUSHMAN, DARBY & CUSHMAN AMERICAN SECURITY BLDG CITY.

Associate Attorney

No. of Claims Allowed 28 Print claim 1 Class 197-25

Title as Allowed Typewriting Machine

DEC 15 33

60

Filed by Cushman Darby & Cushman City

Re 19076

Abstract of title or Consent

PETITION

702611

TO THE COMMISSIONER OF PATENTS:

Your petitioner, Carl A. Joerissen, a citizen of the United States and a resident of Washington, District of Columbia, whose post office address is Mayflower Hotel, Washington, D. C., prays that he may be allowed to surrender the Letters Patent for an improvement in TYPEWRITING MACHINE, No. 1,846,339, granted to him February 23, 1932, whereof he is now sole owner, and that Letters Patent may be reissued to him for the same invention upon the annexed amended specification.

An order for an abstract of title, as required in such cases, is filed herewith.

It is requested that the drawings upon which the original patent was issued may be used in this reissue application. An order for suitable permanent photographic copies of the original drawings is submitted herewith.

Signed at Washington, District of Columbia, this 14th day of December, 1933.

Carl A. Joerissen

175 Supreme Court of District of Columbia

Equity 56,895

JOERISSEN

v.

REMINGTON RAND, INC.

Plaintiff's Exhibit 3.

176 390

Department of Commerce

United States Patent Office

To all persons to whom these presents shall come, Greeting:

This is to certify that the annexed is a true copy from the records of this office of the File Wrapper, Contents and all Drawings, in the matter of the Reissue Letters Patent of Carl A. Joerissen, Number 19,076, Granted February 13, 1934, for Improvement in Typewriting Machines.

In Testimony Whereof I have hereunto set my hand and caused the seal of the Patent Office to be affixed, at the City of Washington, this twenty-seventh day of November, in the year of our Lord one thousand nine hundred and thirty-five and of the Independence of the United States of America the one hundred and sixtieth.

CONWAY P. COE
Commissioner of Patents.
Commissioner of Patents.

(Seal)
Attest:
D E WILSON
Chief of Division.

(Here follows pages marked 154 to 174 and photostats marked pages 177 and 178.)

179 The present invention relates to improvements in typewriting machines, and particularly to means whereby the operation of such a machine is effected with a minimum amount of noise.

Particularly the object of the invention is to overcome the objectionable noise produced by the type bars striking the platen and to provide a key action whereby the type bars will be forced into printing relation with the platen by a positive movement, securing clear impressions, but without forcibly striking the platen.

I am aware that it has been heretofore proposed to provide typewriter key actions in which the noise produced by the type bars striking the platen will be materially reduced, but by the present invention the movement of all the parts is positively effected through connections with the key lever, and without the necessity of employing auxiliary parts for imparting movement to the type bars.

While the invention hereinafter described may be
180 employed in connection with typewriting machines having type bars of various forms and supported in different relations with regard to the printing roll or platen, I have illustrated embodiments thereof in connection with a type action, in which the type bars are pivotally supported and adapted to move upward and rearward into printing relation with a relatively elevated platen.

In the accompanying drawings:

Figure 1 is an elevation of a typewriter key action embodying the present invention, certain parts of the machine being shown in section and the type bar being in its normal inactive position.

Figure 2 is a similar view showing the position of parts when the key lever has been partly depressed and the movement of the type bar toward printing relation with the platen checked.

Figure 3 is a similar view showing the relation of the parts on the completion of the depression of the key lever and the movement of the type bar into printing relation with the platen.

Figure 4 is a detail, on a slightly enlarged scale, of a portion of the connection between the key lever and the type bar checking means.

Figures 5 and 6 are elevational views of a modification showing the parts, respectively, in the positions assumed when the type bar is at rest and in printing relation to the platen.

Figures 7 and 8 are views, respectively similar to Figures 5 and 6, of a slightly modified form of key action, embodying the invention.

In the drawings many of the parts are shown more
181 or less conventionally, and the views are, to a considerable extent, diagrammatic. There can, of course, be material variation as regards proportions and sizes of the several parts, and also considerable modification in many of the details without departing from the invention. Except where specifically referred to in the appended claims, it is not intended to limit the invention to the exact details shown, and the drawings are to be considered illustrative rather than restrictive of the invention.

In Figures 1 to 6 inclusive, I have illustrated the invention as embodied in a key action mechanism of substantially the type employed in the well known Underwood typewriting machine comprising a key lever 1 fulcrumed at its rear end upon a rod 2, and extending through slots in a comb plate or frame member 3. The type bar 4 is pivotally mounted upon a rod 5, which is of arc shape so that the several type bars of the machine lie in the form of a transversely curved basket.

Movement of the key lever 1 is transmitted to the type bar 4 by a sub-lever 6, fulcrumed at 7 on the machine frame. When the forward, outer, end of the key lever 1 is depressed, the type bar 4 will be caused to swing upward and rearward about its pivot 5 into printing relation with the platen 8 and the usual type guide 9 in the manner well understood.

In the drawings I have only illustrated a single key action, and it will be understood that this is to be duplicated throughout the series of type bars in the ordinary manner.

10 designates a link which is pivotally supported at an intermediate point of its length, and has one end connected to the type bar 4. As shown, the pivot 11 of the link 10 is carried by a pivotally mounted fulcrum support 12, which is supported to rock about an axis 13 extending through
182 the members of a depending comb plate or frame section 14. The fulcrum support 12 is provided with a forward extension 15 that engages a link or rod 16 extending upward from and pivotally connected at its lower end to the key lever 1.

The link or member 10 is eccentrically mounted on the fulcrum support 12, and it will be seen that as the type bar swings upward from its normal inactive position represented in Figure 1 to the substantially vertical position shown in Figure 2, such member will be brought into such relation to the axis 13 of the fulcrum support and said bar as to check the swinging movement of the type bar just prior to its coming into contact with the platen.

The engagement of the link or rod 16 with the extension 15 of the fulcrum support 12 will, as the key lever continues to move downward from the position shown in Figure 2, cause a bodily rocking of the fulcrum support about the axis 13, thus moving the connecting member 10 in the direction of its length and positively forcing the type bar toward the platen, completing its movement into printing relation therewith.

As shown in Figures 1 to 3, the stem of the type bar 4 is provided with a longitudinally extending slot 4*a* into which projects a pin or stud at the inner end of the link or checking member 10, and a spring 17 connects the checking member 10, at the opposite side of its fulcrum 11 from the type bar, with the connecting link or rod 16 that extends upward from the key lever 1. The outer end of the link or checking member 10 may be slightly weighted, as indicated at 10*a*, so that this member will offer practically no resistance to the initial upward and rearward swinging movement of the type bar.

As shown, the link or connecting rod 16 has formed
183 therein adjacent its upper end a longitudinal slot 16*a* which receives a pin projecting laterally from the forward extension 15 of the pivotally mounted fulcrum support 12 and these parts are so related that the upper end of said slot 16*a* will engage said pin on the fulcrum support substantially at the moment that the movement of the type bar into printing relation with the platen is checked as before described, at which time the connection of the checking member 10 with the type bar and the fulcrum 11 are in substantial horizontal alignment with the axis 13 of the fulcrum support.

Therefore, while the movement of the type bar toward printing relation with the platen will be checked there will be no material interference with downward movement of

the key lever and the completion of the movement of the type bar into printing relation with the platen will be effected by a positive force exerted by pull of the link 16 on the extension 15 and a consequent movement in the direction of the length of the connecting member 10.

A spring 20 may be interposed between a portion of the typewriter frame and the extension 15 of each fulcrum support to assist in returning the parts to normal position, the machine, of course, including the usual springs 21 for lifting the key levers after the same are relieved from pressure. As shown, the key levers 1 are of the common form including two pivotally connected sections having a coil spring 1a interposed between them, whereby the checking of the upward and rearward swinging movement of the type bar will not interfere with the downward movement of the key and outer end of the key lever through the required stroke.

If desired, each fulcrum support 12 may be pro-
184 vided with a short lateral projection 12*a*, which will extend over the upper edge of the checking member 10 when the parts are in the position shown in Figures 2 and 3, and, under the pull exerted by the spring 20 will assist in starting the turning movement of said checking member about its fulcrum so that it will not in any way interfere with the return of the type bar to its normal inactive position.

In the embodiment of the invention illustrated in Figures 5 and 6, the means for checking the movement of the type bar toward printing relation with the platen includes a toggle, one member 30 of which is fulcrumed on the pivotally mounted fulcrum support 12, and the other member 31 of which is pivotally connected to the type bar 4. The forward end of the toggle member 30 is connected by a link 32 with a lever 33, which is arranged below the plane of the key lever 1, and is adapted to be rocked about its fulcrum 34 by the movement of a downwardly extending arm 6a of the sub-lever 6.

With this arrangement it will be seen that as the type bar moves from its normal inactive position shown in Figure 5 upward and rearward toward the platen 8, the members 30, 31, of the toggle will come into a substantially straight line relation, thus checking the movement of the

type bar, and when the fulcrum support 12 is rocked about its pivotal axis the toggle will exert a positive push upon the type bar, completing the movement thereof into printing relation with the platen. The final operative swing of the fulcrum support is permitted by the pin of the pin and slot connection between members 6*a* and 33 coming under the upward enlargement at the right end of the slot (Fig. 6).

That part of the fulcrum support between its swinging axis and the screw 11 constitutes a link portion swingable downwardly from its normal position of rest and
185 rearwardly to complete the stroke of the type bar.

The fulcrum support being thus normally poised, its inertia is overcome with the least possible effort. Spring 1*a* in straightening the key bar moves link 16 upwardly to restore the fulcrum support, the usual key bar return spring assisting in this action.

A suitable stop 30*a* may be provided about the pivotal connection between the toggle members 30, 31, to prevent any possibility of this connection being moved upward beyond that in which the toggle members are in substantially straight line relation, as shown in Figure 6.

In the embodiment of the invention illustrated in Figures 7 and 8 the type bar, 4*b*, is pivoted directly to the pivotally mounted fulcrum support 12 and the outer end thereof is connected by the link 32 with the lever 33.

A sub-lever 6*b* is interposed between the key lever 1 and the lever 33, so that the initial depression of the key lever will actuate the lever 33 and through its connection with the type bar swing the latter into alignment with the type guide 9 and the platen 8.

The extent of movement permitted the lever 33 is such that swinging movement of the type bar will be checked as said bar comes into substantial alignment with the axis of the fulcrum support 12 and the pivotal connection of the bar with said support.

The length of the type bar is such, and it is so related to the other parts, that with the several members in the relation described the printing head on the type bar will not touch the platen. However, as the fulcrum support 12 is rocked by the positive pull exerted through the connection 16, as the downward movement of the key lever continues,

the type bar will receive a slight movement substan-
186 tially in the direction of its length which will com-
plete the movement of said bar into printing relation with the platen.

It is believed that the operation and advantages of the invention will be readily understood from the foregoing description in connection with the drawings. It will be seen that the invention provides a very simple means for preventing the sudden striking of the type bars against the platen, which is the cause of the objectionable noise incident to operating such machines. By the arrangement of parts described, the movement of the type bar into printing relation with the platen is checked and the completion of such movement is caused by a positive connection between the key lever and the type bar.

It will be seen that whether a special checking means made as a single member extending continuously from its pivotal connection with the fulcrum support 12 to the type bar or in the form of a toggle, as illustrated in Figures 5 and 6, is interposed between the fulcrum support and the type bar or the latter is pivotally connected directly to said support the turning of said support which effects the completion of the type bar movement to printing relation with the platen is due to a positive connection with the key lever.

In the drawings I have illustrated a key action located approximately at the middle, transversely, of the machine and wherein the link connections 16 and 32 may be perfectly straight, one piece, elements. The corresponding parts of key actions situated at or nearer the ends or sides of the type bar basket will, of course, have to be slightly modified, the exact form of each said connection depending upon the location of the particular key action in the machine.

However, in all instances there is a positive con-
187 nection between the key lever and the fulcrum sup-
port for the checking means for rocking said support and effecting a movement in the direction of the length of said means for effecting completion of the movement of the type bar to printing relation to the platen.

Having thus described the invention, what is claimed as new is:

I Claim:

188 1. In a typewriting machine, the combination of a platen, a key lever, a type bar movable to and from printing relation with the platen, means controlled by actuation of the key lever for effecting initial movement of the type bar toward the platen, means for checking the movement of the type bar toward the platen including a pivotally mounted member connected to the type bar, and means for connecting the key lever and said pivotally mounted member during a portion of an operative movement of the key lever for positively moving said member to effect completion of a movement of the type bar toward the platen.

2. In a typewriting machine, the combination of a platen, a depressible key lever, a pivotal type bar mounted to swing upward and rearward into printing relation with the platen, means controlled by actuation of the key lever for effecting initial movement of the type bar toward the platen, means for checking the movement of the type bar toward the platen including a pivotally mounted member connected to and extending forward from the type bar, and means for establishing a connection between the key lever and said pivotally mounted member for positively moving said member to effect completion of a movement of the type bar toward the platen.

189 3. In a typewriting machine, the combination of a platen, a key lever, a type bar movable to and from printing relation with the platen, means controlled by actuation of the key lever for effecting initial movement of the type bar toward the platen, means for checking the movement of the type bar toward the platen prior to its coming into printing relation to the platen including a member pivotally supported in advance of the platen and connected to the type bar, and means connected with the key-lever for moving said member about its pivotal support, after the movement of the type bar has been checked, to effect completion of a movement of the type bar to printing relation with the platen.

4. In a typewriting machine, the combination of a platen, a depressible key lever, a type bar movable to and from printing relation to the platen, means controlled by depression of the key lever for effecting initial movement of the type bar toward the platen, means for checking such move-

ment of the type bar including a member connected to said bar and extending at an angle to the length of the bar when its movement toward the platen is checked, and means including a member extending upward from the key lever for positively actuating said first mentioned member to effect completion of movement of the type bar into printing relation with the platen.

5. In a typewriting machine, the combination of a
190 platen, a depressible key lever, a type bar movable to and from printing relation to the platen, means controlled by depression of the key lever for effecting initial movement of the type bar toward the platen, means for checking such movement of the type bar including a member connected to said bar and extending substantially at right angles to the length of the bar when its movement toward the platen is checked, and means adapted to be positively actuated by the key lever for imparting a substantially longitudinal movement to said member to effect completion of movement of the type bar into printing relation to the platen.

6. In a typewriting machine, the combination of a platen, a key lever, a type bar movable to and from printing relation with the platen, means controlled by actuation of the key lever for effecting initial movement of the type bar toward the platen, means for checking the movement of the type bar toward the platen, prior to its coming into printing relation to the platen and including a pivotally mounted member connected to the type bar, and supplemental means connected with the key lever and adapted to positively rock said pivotal member during the latter portion of an operative movement of the key lever to effect completion of movement of the typebar into printing relation to the platen.

7. In a typewriting machine, the combination of a
191 platen, a key lever, a type bar movable to and from printing relation with the platen, means controlled by actuation of the key lever for effecting initial movement of the type bar toward the platen, means for checking the movement of the type bar toward the platen including a pivotally mounted member connected to the type bar, a pivotally mounted fulcrum support for said member, and means for connecting the key lever and said fulcrum sup-

port whereby downward movement of the key after movement of the type bar has been checked will rock said fulcrum support and move said member in the direction of its length to effect completion of movement of the type bar into printing relation to the platen.

8. In a typewriting machine, the combination of a platen, a key lever, a type bar movable to and from printing relation with the platen, means controlled by actuation of the key lever for effecting initial movement of the type bar toward the platen, means for checking the movement of the type bar toward the platen including a pivotally mounted member connected to the type bar, a pivotally mounted fulcrum support for said member, and a rod extending upward from the key lever and adapted as the key is depressed beyond the position assumed when movement of the type bar toward the platen is checked to engage and positively rock the fulcrum support to move said member in the direction of its length to effect completion of movement of the type bar into printing relation to the platen.

9. In a typewriting machine, the combination of a
192 platen, a depressible key lever, a pivoted type bar adapted to swing upward and rearward into printing relation to the platen, a sub-lever interposed between the key-lever and type bar and adapted to effect initial movement of the type bar toward the platen as the key lever is depressed, means for checking such movement of the type bar including a member connected to the type bar and extending substantially horizontally therefrom when movement of the type bar is checked, and a rod extending upward from the key lever and adapted, as said lever is depressed beyond the position assumed when movement of the type bar is checked, to move said member in the direction of its length to effect completion of the movement of the type bar to printing relation to the platen.

10. In a typewriting machine, the combination of a platen, a depressible key lever, a pivoted type bar adapted to swing upward and rearward into printing relation to the platen, a sub-lever interposed between the key-lever and type bar and adapted to effect initial movement of the type bar toward the platen as the key lever is depressed, means for checking such movement of the type bar including a pivotally mounted member connected to the type bar and pro-

jecting laterally therefrom when movement of the type bar is checked, a pivotal fulcrum support for said member, and means actuated by depressing the key lever beyond the position assumed when movement of the type bar is checked for positively moving the fulcrum support of said member to cause the latter to effect completion of movement of the type bar into printing relation to the platen.

11. In a typewriting machine, the combination of a
193 platen, a key lever, a type bar movable to and from printing relation with the platen, means controlled by actuation of the key lever for effecting initial movement of the type bar toward the platen, means for checking the movement of the type bar toward the platen prior to its coming into printing relation to the platen and including a pivotally mounted member connected to the type bar, and a connecting means extending upward from the key lever and adapted as the key lever is depressed beyond the position assumed when movement of the type bar is checked to engage and positively rock said pivotally mounted member to effect completion of movement of the type bar to printing relation to the platen.

12. In a typewriting machine, the combination of a platen, a key lever, a pivotally mounted type bar, means controlled by actuation of the key lever for effecting initial swinging movement of the type bar toward the platen, means connected to and moving with the type bar for checking movement of such bar toward the platen prior to its coming into printing relation to the platen, and supplemental means positively actuated by the key lever, after the movement of the type bar has been checked, for effecting completion of movement of the type bar to printing relation to the platen in a substantially straight line direction.

13. In a typewriting machine, the combination of
194 a platen, a key lever, a type bar movable to and from printing relation with the platen, means controlled by actuation of the key lever, for effecting initial movement of the type bar toward the platen, means for checking the movement of the type bar toward the platen prior to its reaching printing relation to the platen including a link-like member pivotally supported in advance of the platen and having its rear end connected to the type bar, and means connected with the key-lever for moving the link relative to

its pivotal support to effect completion of a movement of the type bar toward the platen.

14. In a typewriting machine, the combination of a platen, a key lever, a type bar movable to and from printing relation with the platen, means controlled by actuation of the key lever for effecting initial movement of the type bar toward the platen, means for checking the movement of the type bar toward the platen, including a pivotally mounted member connected to the type bar, and supplemental means connected with the key lever and adapted to positively shift the fulcrum of said pivotal member during the latter portion of an operative movement of the key lever to move said member in the direction of its length to effect completion of movement of the type bar into printing relation to the platen.

15. In a typewriting machine, the combination of a
195 platen, a type carrier mounted to swing upward to printing relation to the platen, means for checking movement of the type carrier toward the platen prior to the carrier coming into printing relation to the platen including a pivotally mounted member which remains stationary until said movement of the type carrier is checked and is thereafter bodily rocked to effect completion of movement of the type carrier to printing relation to the platen, a key lever, and means actuated by operation of the key lever for effecting successively movement of the type carrier and said pivotally mounted member.

16. In a typewriting machine, the combination of a platen, a depressible key lever, a type bar movable to and from printing relation with the platen, means controlled by depression of the key lever for effecting movement of the type bar toward the platen, means for checking such movement of the type bar prior to its reaching printing relation with the platen, including a pivotally mounted member connected with the type bar, and means, actuated by movement of the key lever after the movement of the type bar has been checked, for rocking said pivotally mounted member to effect completion of movement of the type bar into printing relation to the platen.

17. In a typewriting machine, the combination of a
196 platen, a key lever, a pivotally mounted type bar movable to and from printing relation with the platen, means controlled by actuation of the key lever for

effecting movement of the type bar toward the platen, means for checking such movement of the type bar prior to its reaching printing relation with the platen, including a pivotally mounted member connected with the type bar, and supplemental means, actuated by the key lever after the movement of the type bar has been checked, for rocking said pivotal member and effecting completion of the movement of the type bar towards the platen.

18. In a typewriting machine, the combination of a platen, a key lever, a type bar movable to and from printing relation with the platen, means actuated during the first portion of an operative movement of the key lever for effecting movement of the type bar toward the platen, means for checking movement of the type bar toward the platen prior to the bar coming into printing relation to the platen, and including a member connected to the type bar and pivotally supported in advance of the platen, and supplemental means, actuated by the key lever after the movement of the type bar has been checked, for rocking said pivotally mounted member to effect completion of the movement of the type bar toward the platen.

19. In a typewriting machine, the combination of a
197 platen, a depressible key lever, a pivoted type bar, means controlled by depression of the key lever for effecting movement of the type bar toward the platen, means movable with the type bar for checking such pivotal movement of the type bar prior to the bar coming into printing relation to the platen, and supplemental means providing a positive connection between the key lever and type bar, after such movement of the type bar has been checked, and effecting completion of the movement of the type bar toward the platen.

20. In a typewriting machine, the combination of a platen, a type carrier movable to and from printing relation with the platen, and means for moving the type carrier into printing relation to the platen including a normally collapsed toggle, the straightening of which acts to check movement of the type carrier prior to the latters contacting with the platen, and means for moving the toggle substantially in the direction of its length to complete the printing movement of the type carrier.

21. In a typewriting machine, the combination of a platen, a type carrier movable to and from printing relation with

the platen, and means for moving the type carrier into printing relation to the platen including a normally collapsed toggle, the straightening of which acts to check movement of the type carrier prior to the latters contacting with the platen, and a rocking member connected with and adapted to supplement the action of the toggle to complete printing movement of the type carrier.

22. In a typewriting machine, the combination of a
198 platen, a type carrier movable to and from printing relation with the platen, and means for moving the type carrier into printing relation to the platen including a normally collapsed toggle, one member of which is adapted to move the type carrier as the toggle is expanded, a pivotally mounted support for the other toggle member, and means whereby the support is rocked to supplement the action of the toggle in completing printing movement of the type carrier.

23. In a typewriter, a type bar pivoted for an upward and rearward operative swing, a toggle comprising two pivotally connected members of which one has a pivotal connection with the type bar, a swingable link portion having a pivotal connection with the other of said toggle members, said link portion being swingable downwardly from its normal position of rest and rearwardly, a key bar operable to move the toggle members from a normally collapsed downwardly extending position to a relatively straightened position and to impart to the type bar a terminally checked throw to a position slightly in advance of striking position, and means thereupon effective to operatively swing said link portion to complete the stroke of the type bar through said toggle.

24. In a typewriter, a type bar pivoted for an up-
199 ward and rearward operative stroke, a toggle comprising two pivotally connected members of which one has a pivotal connection with the type bar, a swingable link portion having a pivotal connection with the other of said toggle members, said link portion being swingable downwardly from its normal position of rest and rearwardly, a key bar having a connection with said toggle and operable to move the toggle members from a normally collapsed downwardly extending position to a relatively straightened position and to impart to the type bar a terminally checked throw to a position slightly in advance of

striking position, and means external of said connection thereupon effective to swing said link portion to complete the stroke of the type bar through said toggle.

25. In a typewriter, a type bar pivoted for an upward and rearward operative swing, a toggle comprising two pivotally connected members of which one has a pivotal connection with the type bar, a swingable link portion having a pivotal connection with the other of said toggle members, said link portion being swingable downwardly from its normal position of rest and rearwardly, a key bar operable to move the toggle members from a normally collapsed downwardly extending position to a relatively straightened position and to impart to the type bar a terminally checked throw to a position slightly in advance of striking position, means thereupon effective to operatively swing said link portion to complete the stroke of the type bar through said toggle, and power-storing means tending to restore said link portion.

26. In a typewriter, a type bar pivoted for an up-
200 ward and rearward operative stroke, a toggle comprising two pivotally connected members of which one has a pivotal connection with the type bar, a swingable link portion having a pivotal connection with the other of said toggle members, said link portion being swingable downwardly from its normal position of rest and rearwardly, a key bar having a connection with said toggle and operable to move the toggle members from a normally collapsed downwardly extending position to a relatively straightened position and to impart to the type bar a terminally checked throw to a position slightly in advance of striking position, means external of said connection thereupon effective to swing said link portion to complete the stroke of the type bar through said toggle, and power-storing means tending to restore said link portion.

27. In a typewriter, a type bar pivoted for an upward and rearward operative stroke, a toggle comprising two pivotally connected members of which one has a pivotal connection with the type bar, a swingable link portion having a pivotal connection with the other of said toggle members, said link portion being swingable downwardly from its normal position of rest and rearwardly, a key bar having a connection with said toggle and operable to move the toggle members from a normally collapsed downwardly extending

position to a relatively straightened position and to impart to the type bar a terminally checked throw to a position slightly in advance of striking position, said connection including means acting on the type bar exclusively of the toggle during said terminally checked throw, and means external of said connection thereupon effective to swing said link portion to complete the stroke of the type bar through said toggle.

28. In a typewriter, a type bar pivoted for an up-
201 ward and rearward operative stroke, a toggle comprising two pivotally connected members of which one has a pivotal connection with the type bar, a swingable link portion having a pivotal connection with the other of said toggle members, said link portion being swingable downwardly from its normal position of rest and rearwardly, a key bar having a connection with said toggle and operable to move the toggle members from a normally collapsed downwardly extending position to a relatively straightened position and to impart to the type bar a terminally checked throw to a position slightly in advance of striking position, said connection including means acting on the type bar exclusively of the toggle during said terminally checked throw, means external of said connection thereupon effective to swing said link portion to complete the stroke of the type bar through said toggle, and power-storing means tending to restore said link portion.

In testimony whereof I have hereunto set my hand.

CARL A. JOERISSEN.

202 *Oath*

District of Columbia, *ss:*

Carl A. Joerissen, the above named petitioner, being duly sworn, deposes and says that he does verily believe himself to be the original, first and sole inventor of the improvement set forth and claimed in the foregoing specification and for which improvement he solicits a patent; that Deponent does not know and does not believe that said improvement was ever before known or used; that Deponent is a citizen of the United States of America, and resides at Washington, District of Columbia, that Deponent verily believes that the Letters Patent referred to in the foregoing petition and specification and herewith surrendered

are inoperative for the reason that the specification thereof is defective, and that such defect consists particularly in the wording of claims 24, 26, 27 and 28 of the said Letters Patent; and Deponent further says that the errors which render such patent so inoperative arose from inadvertence, accident or mistake, and without any fraudulent or deceptive intention on the part of Deponent; that the following is a true specification of the errors which it is claimed constitute such inadvertence, accident or mistake relied upon; the omission, after the word "position", line 14, claim 24, line 14, claim 26, line 14, claim 27, and line 13 of claim 28 of said Letters Patent of the word "and", said omission rendering the said claims inoperative with respect to the invention intended to be covered thereby; that such errors so particularly specified occurred as follows:

Claims 23 to 26 of the said Letters Patent were originally allowed in applicant's copending application, Serial No. 167,734, filed February 12, 1927, now Patent 1,856,340, issued May 3, 1932, as claims 26, 28, 30 and 31 and were subsequently transferred to his application Serial No. 96,602, now said Letters Patent 1,846,339; that a draft of
203 the last mentioned claims was submitted to applicant prior to the formal entry of the claims and that in this draft of the said claims the word "and" appeared in all the claims just as it now correctly appears in line 13 of each of claims 23 and 25 of said Letters Patent 1,846,339, originally claims 26 and 30 of said Serial No. 167,734; that it was his belief that the claims as originally submitted in Serial No. 167,734 included the word "and" in the position mentioned exactly as in the draft first submitted to him, and that he is informed by his attorneys by whom the amendment was submitted, and so believes it to be true, that the omission of the word "and" in the position mentioned in claims 28 and 31 of said Serial No. 167,734 occurred entirely inadvertently and through an error of transcription, and that according to his information and belief the same omission occurred in claims 27 and 28 of the said Letters Patent 1,846,339, these claims having been submitted as based on claims 23 and 26 respectively of said Letters Patent 1,846,339 and hence embodying the same error as the latter.

That through the omission of the word "and" in the position mentioned in claims 24, 26, 27 and 28 of said Let-

ters Patent 1,846,339 the said claims are susceptible of a restricted interpretation at no time intended by him, the language of the said claims in view of the said omission implying that the relative straightening of the toggle members causes the terminally checked throw of the type bar, whereas under the invention disclosed in said Letters Patent 1,846,339 the movement of the type bar to its terminally checked position may be imparted in whole or in part through mechanism other than the toggle members; and further, in the said omission the claims in question are brought into conflict with his Letters Patent 1,856,340 wherein claim 22 is expressly directed to a construction wherein the movement of the type bar *is* effected
204 through the toggle members; that whereas said claims 26, 28, 30 and 31 of said Serial No. 167,734 were slightly amended upon transfer to the application issued as said Letters Patent 1,846,339, such amendment in no way affected the inoperativeness occasioned by the omission in question.

Deponent further says that the omission herein above referred to has just been called to his attention and that he has at once entered his petition for reissue.

CARL A. JOERISSEN

Sworn to and subscribed before me this 14th day of December, 1933.

THERESA BUCKHANTZ
(Seal) *Notary Public, D. C.*

No. 1846339

THE UNITED STATES OF AMERICA

TO ALL TO WHOM THESE PRESENTS SHALL COME:

Whereas CARL A. JOERISSEN,

of

Washington, District of Columbia,

PRESENTED TO THE **Commissioner of Patents** A PETITION PRAYING FOR THE GRANT OF LETTERS PATENT FOR AN ALLEGED NEW AND USEFUL IMPROVEMENT IN

TYPEWRITING MACHINES,

A DESCRIPTION OF WHICH INVENTION IS CONTAINED IN THE SPECIFICATION OF WHICH A COPY IS HEREUNTO ANNEXED AND MADE A PART HEREOF, AND COMPLIED WITH THE VARIOUS REQUIREMENTS OF LAW IN SUCH CASES MADE AND PROVIDED, AND

Whereas UPON DUE EXAMINATION MADE THE SAID CLAIMANT is ADJUDGED TO BE JUSTLY ENTITLED TO A PATENT UNDER THE LAW.

NOW THEREFORE THESE **Letters Patent** ARE TO GRANT UNTO THE SAID

Carl A. Joerissen, his heirs OR ASSIGNS

FOR THE TERM OF SEVENTEEN YEARS FROM THE DATE OF THIS GRANT

THE EXCLUSIVE RIGHT TO MAKE, USE AND VEND THE SAID INVENTION THROUGHOUT THE UNITED STATES AND THE TERRITORIES THEREOF.

In testimony whereof I have hereunto set my hand, and caused the seal of the Patent Office *to be affixed at the City of Washington this* twenty-third *day of* February, *in the year of our Lord one thousand nine hundred and* thirty-two, *and of the Independence of the United States of America the one hundred and* fifty-sixth.

Attest:

Law Examiner.

Thomas E. Robertson
Commissioner of Patents.

MAIL DIVISION
DEC 16 33
PATENTS

DOCKET DIVISION
DEC 16 1933
U.S. PATENT OFFICE

Applicant: Carl A. Joerrisen

Invention: TYPEWRITING MACHINE

Filed: Dec. 15, 1933

~~Ser. No.~~
Reissue of Patent 1,846,339

HON. COMMISSIONER OF PATENTS,

SIR:

Please recognize as ~~associate~~ attorneys in the above named case, with full powers of prosecution, Messrs. Cushman, Darby & Cushman, a firm composed of Arlon V. Cushman, John J. Darby & William M. Cushman (Reg. No. 7196), American Security Building, Washington, D. C.

All former powers are hereby revoked.

Respectfully,

Carl A. Joerrisen

Dec. 15, 1933

Feb. 23, 1932. C. A. JOERISSEN 1,846,339

TYPEWRITING MACHINE

Filed March 22, 1926

Print of drawing as originally filed.

Fig. 1.

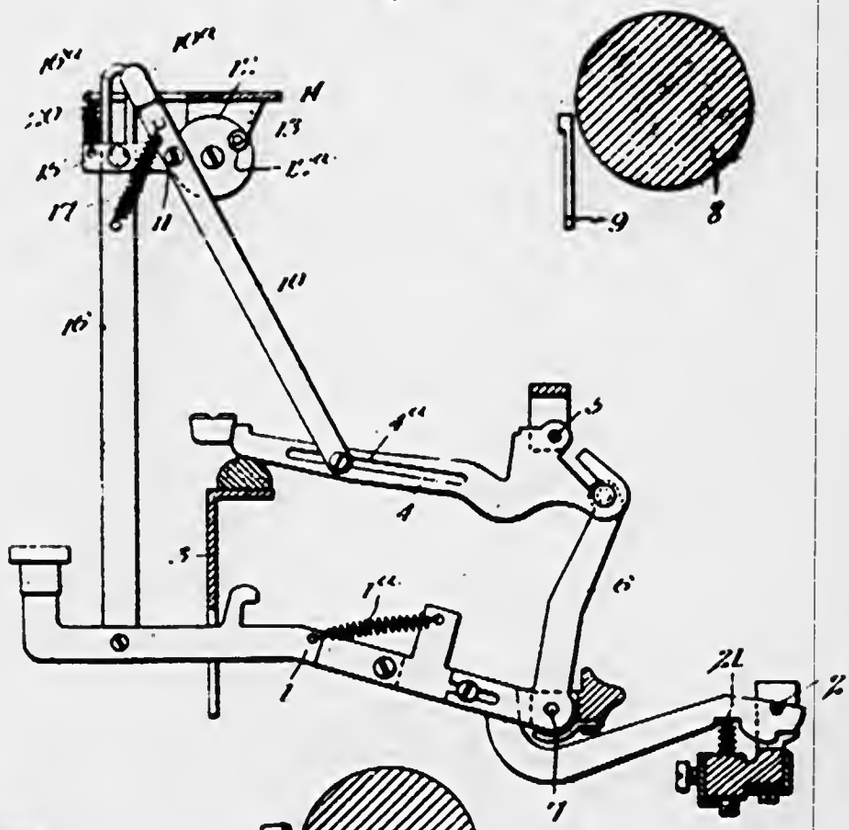

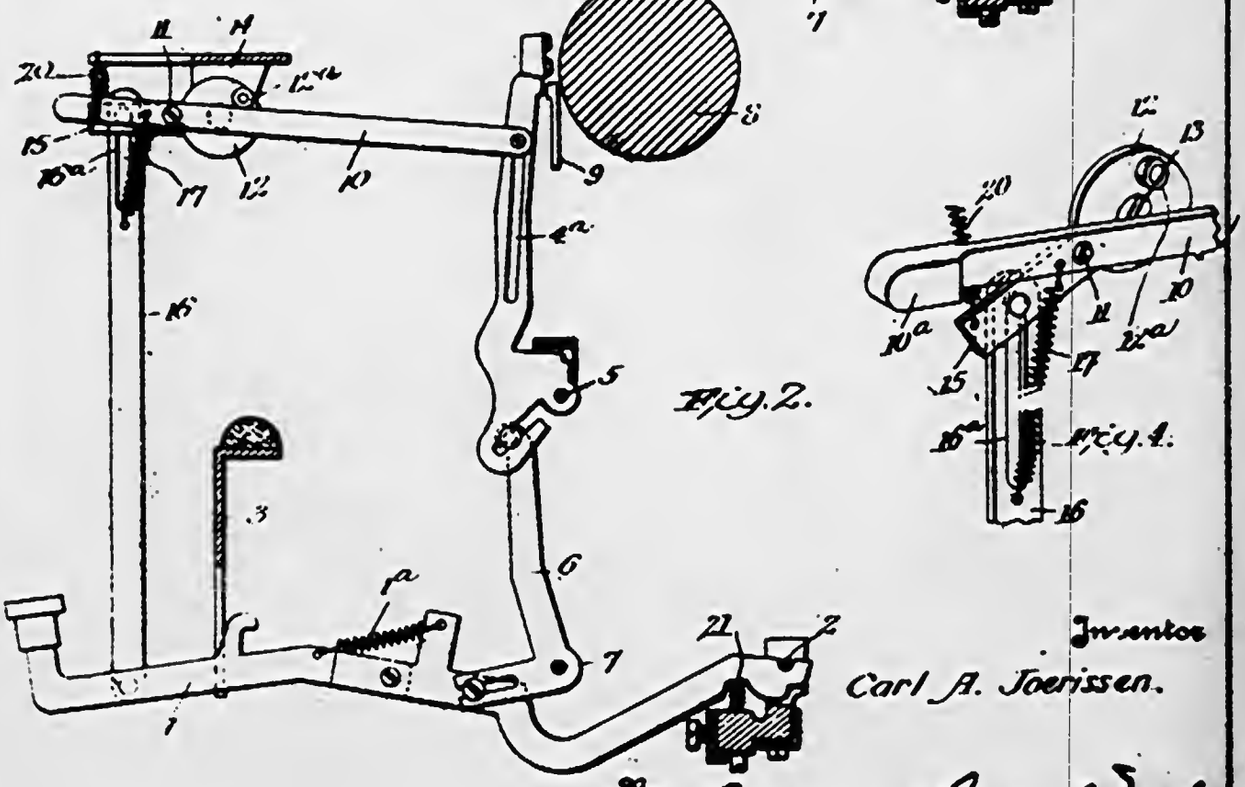

Fig. 2.

Fig. 4.

Inventor

Carl A. Joerissen.

By Cushman, Darby & Cushman

Attorneys

56632

Feb. 23, 1932. C. A. JOERISSEN 1,846,339

TYPEWRITING MACHINE

Filed March 22, 1926 3 Sheets-Sheet 2

Fig. 3.

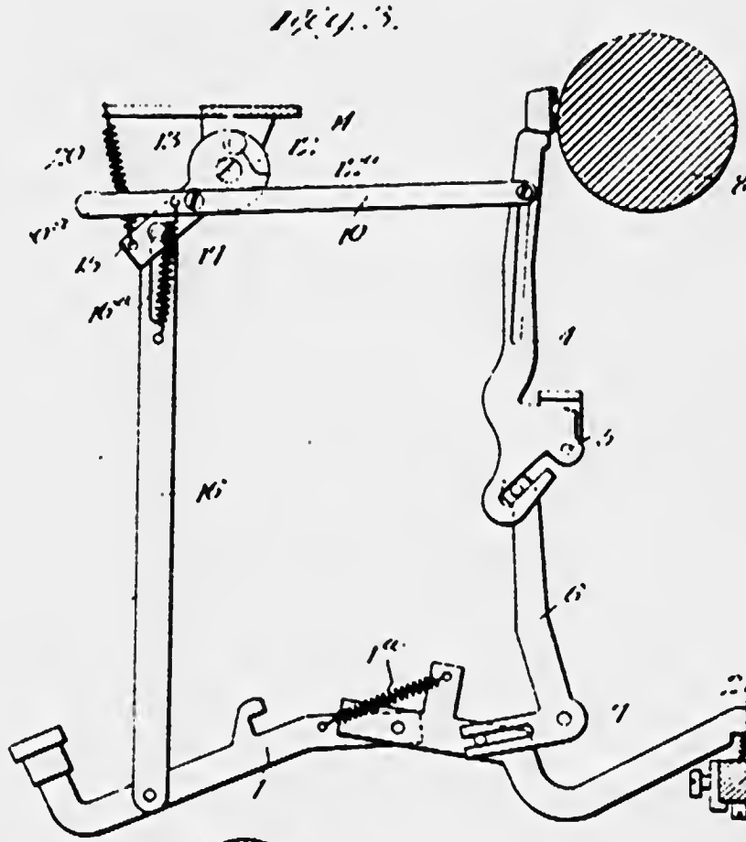

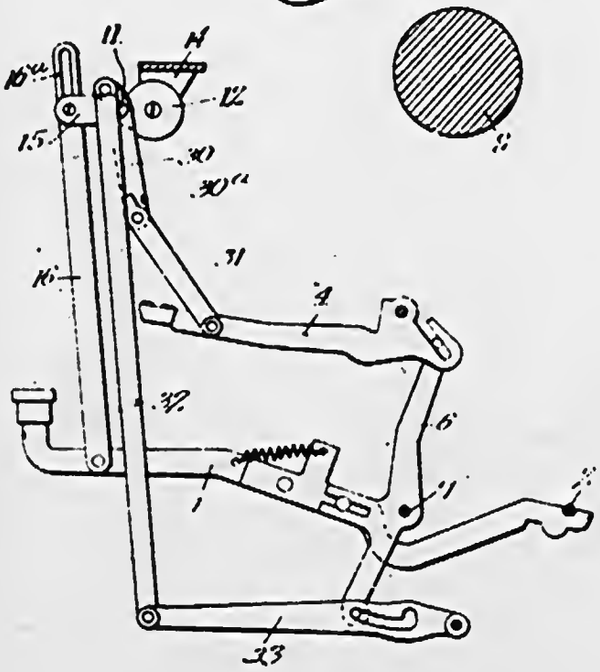

Fig. 5.

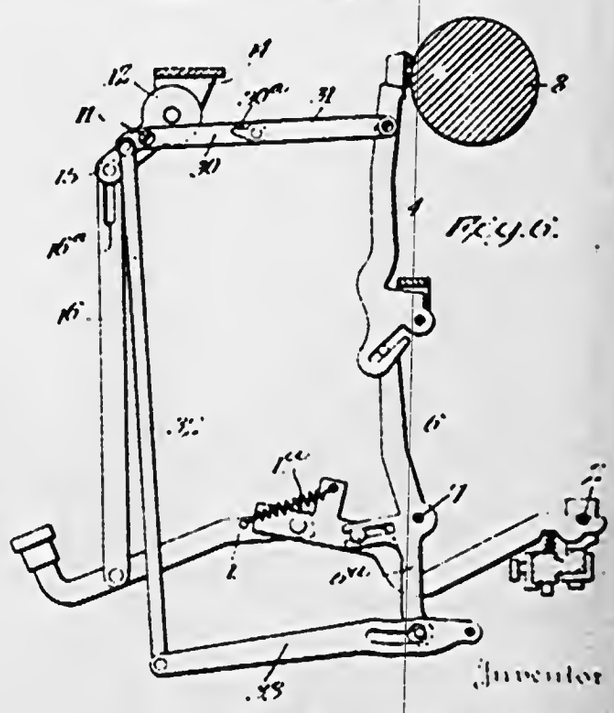

Fig. 6.

Inventor

Carl A. Joerissen.

By Cushman, Darby and Darby

Attorneys

Serial No. [redacted]2 Div. No.

Feb. 23, 1932. C. A. JOERISSEN 1,846,339

TYPEWRITING MACHINE

Filed March 22, 1926 ~~3 Sheets-Sheet 3~~

Print of drawing as originally filed.

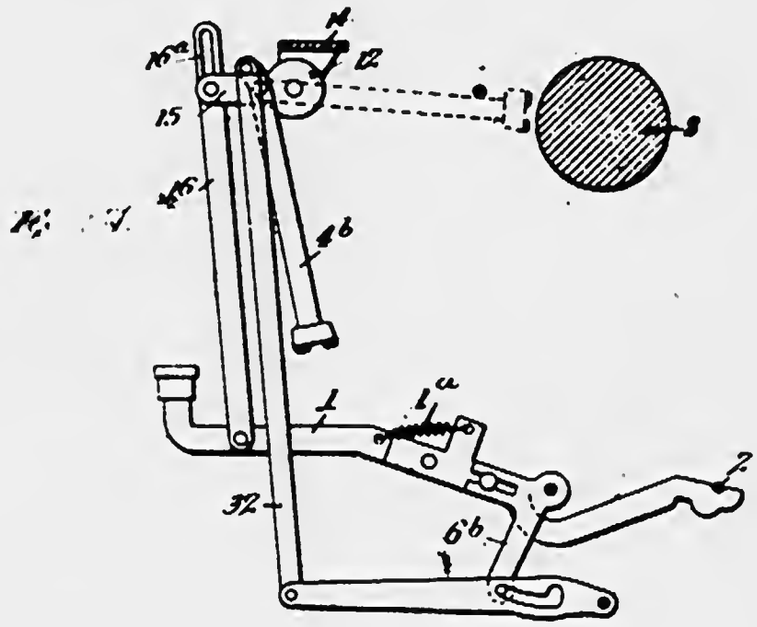

Fig. 7.

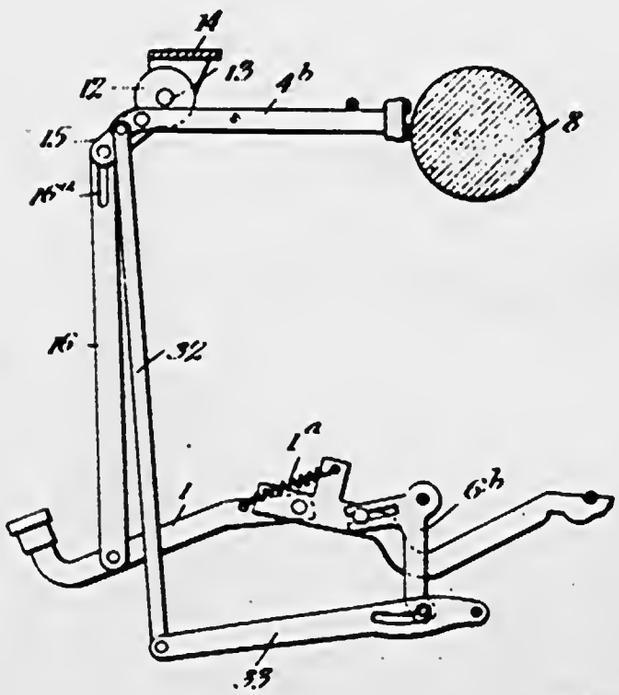

Fig. 8.

Inventor
Carl A. Joerissen,

By Cushman, Darby & Cushman
Attorneys

Paper No. 2
Letter

MAIL DIVISION
DEC 15 33
PATENT OFFICE

This letter to be placed in Reissue Applicn No. 702611 Div 41

IN THE UNITED STATES PATENT OFFICE

Application for Reissue
Patent 1,846,339
Issued Feb. 23, 1932
Carl A. Joerrisen

PATENT OFFICE
DEC 26 1933
DIV. 41 FILED

December 15, 1933.

Hon. Commissioner of Patents,
Washington, D. C.

Sir:

In transferring the original drawings of the above identified patent to the reissue application, kindly prepare photographic copies of the drawings, charging the cost to our account.

Respectfully,

Cushman Darby & Cushman
Attorneys.

GFF:M

3 Prints ordered by Applic Div
Charge 60¢
CLP

Div. 41

TITLE REPORT

No. 1,846,339

Name Carl A. Joerissen

The title appears from the assignment records to be vested in:

Inventor

Examined up to and including Dec. 11, 1933

This certificate dated Dec. 21, 1933

H. C. Spielmann
Acting Chief of Assignment Division.

No further assignments appear to have been received for record including 1/6/34

H.

ADDRESS ONLY
COMMISSIONER OF PATENTS
WASHINGTON, D. C.

SERIAL No. 702,611

DEPARTMENT OF COMMERCE
UNITED STATES PATENT OFFICE
WASHINGTON

January TEN, 1934

Carl A. Joerissen
Sir:

Your application for Reissue for Patent No. 1,846,339 for improvement in TYPEWRITING MACHINE, filed December 15, 1933, has been examined and allowed. (28 claims)

The patent will be forwarded to you as soon as practicable, in due order of business.

Very respectfully,

Conway P. Coe
Commissioner of Patents.

Cushman, Darby, & Cushman
American Security Bldg.
Washington, D. C.

PATENT
FEB 13 1934
WILL ISSUE

1/3/25

1

1933

CONTENTS

Application _____ *papers:*

1. Power 3 ober 27 Dec 20, 1933
2. Letter Dec 15, 1933
3. _____
4. _____
5. _____
6. _____
7. _____
8. _____
9. _____
10. _____
11. _____
12. _____
13. _____
14. _____
15. _____
16. _____
17. _____
18. _____
19. _____
20. _____
21. _____
22. _____
23. _____
24. _____
25. _____

197/25 197 TYPEWRITING MACHINES

Serial No. 566021

25

Feb. 13, 1934.

C. A. JOERISSEN

Re. 19,076

TYPEWRITING MACHINE

Original Filed March 22, 1926 3 Sheets-Sheet 1

Fig. 1.

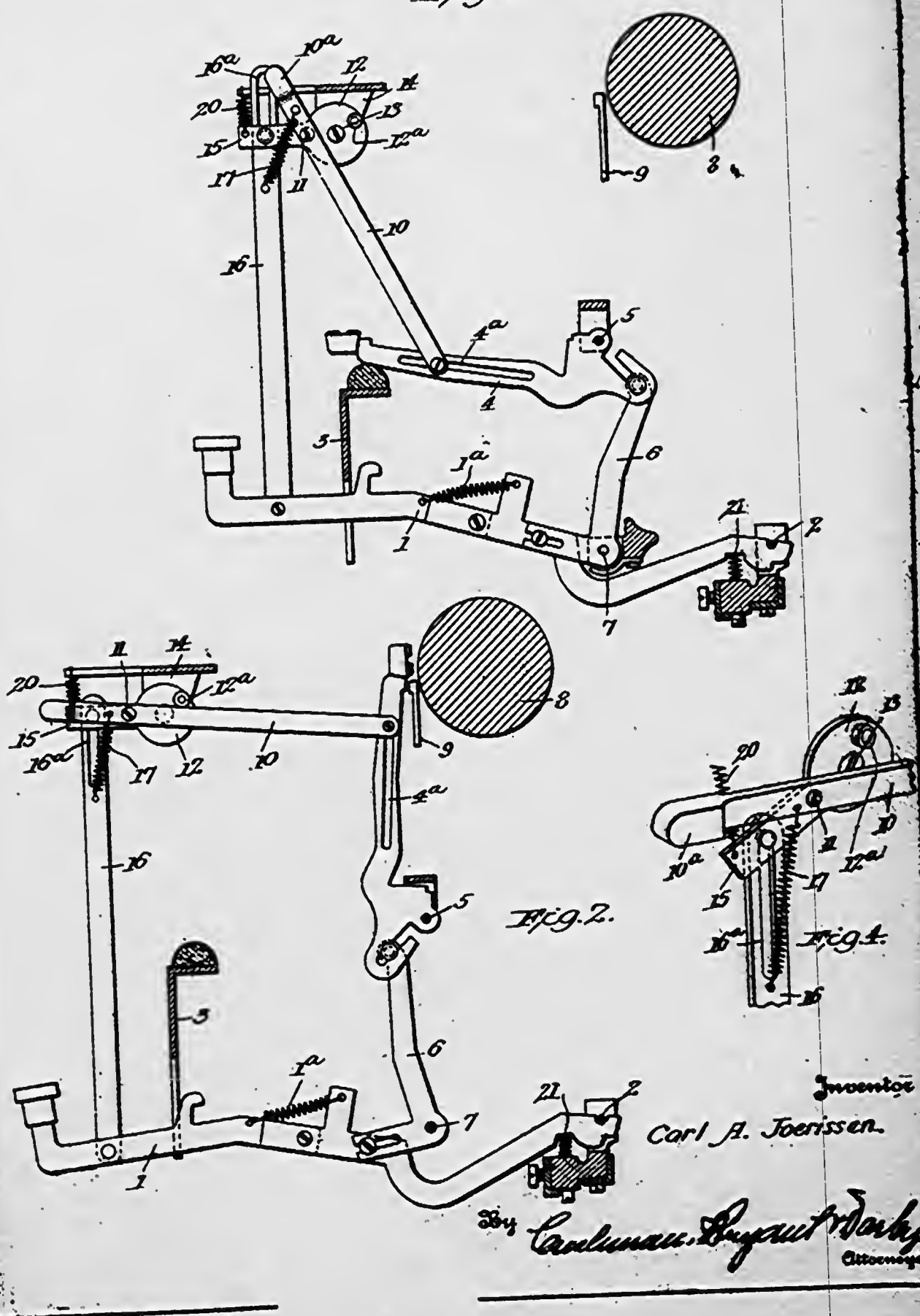

Fig. 2.

Fig. 4.

Inventor
Carl A. Joerissen.

By Cushman, Bryant & Darby
Attorneys

= Jan. 10, 1934

Re 19,076

6359

R5

197

3

233

Serial No. 702,619 56602 Div. 3

Feb. 13, 1934.

C. A. JOERISSEN

Re. 19,076

TYPEWRITING MACHINE

Original Filed March 22, 1926 3 Sheets-Sheet 2

Fig. 3.

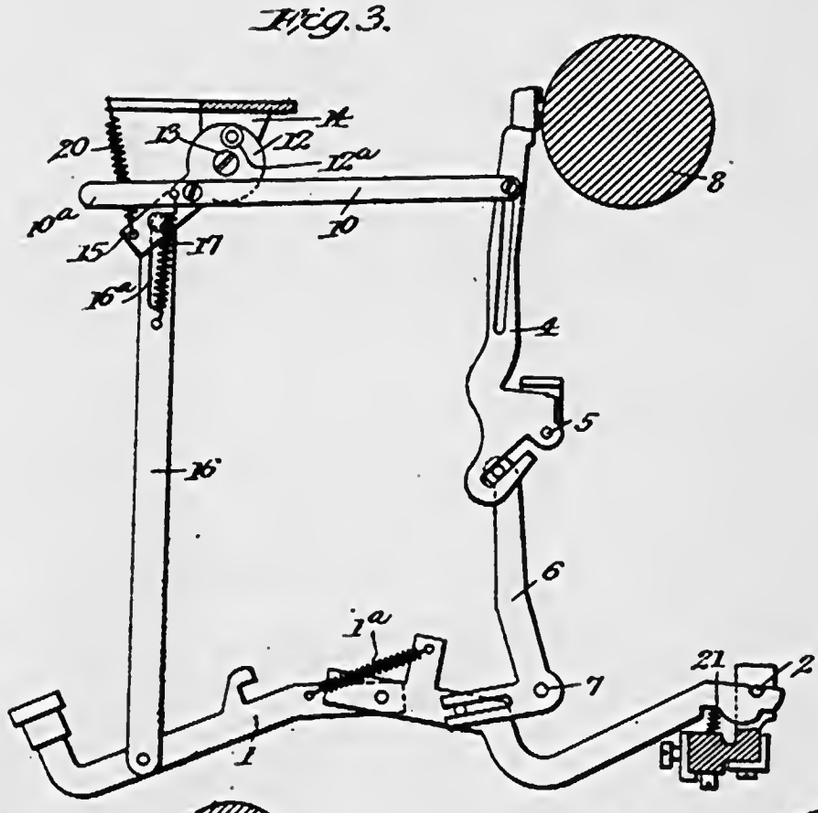

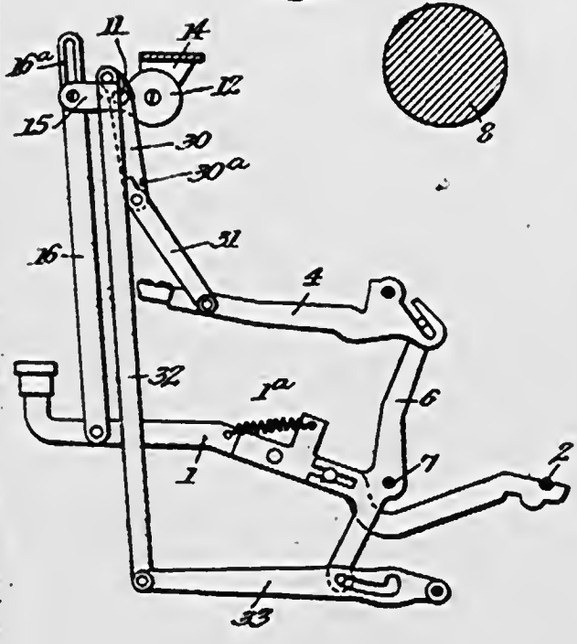

Fig. 5.

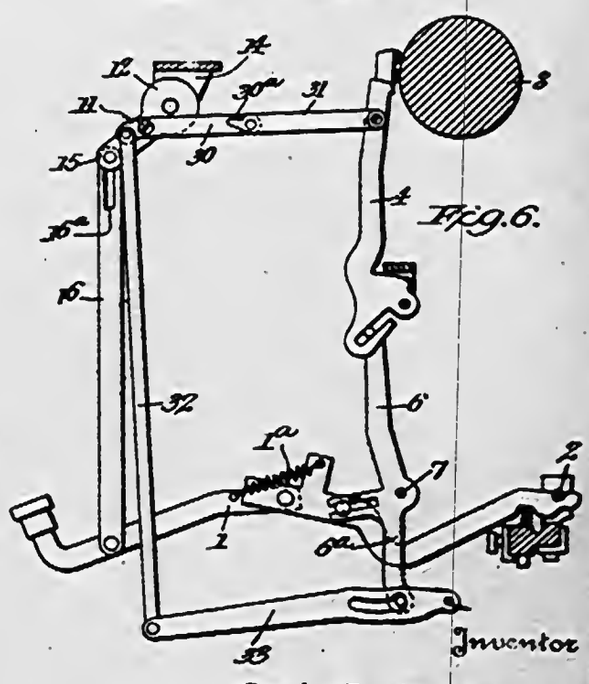

Fig. 6.

Inventor
Carl A. Joerissen

By Cushman, Darby & Cushman
Attorneys

102 611

Serial No. ~~96602~~ Div. 30

Feb. 13, 1934. C. A. JOERISSEN Re. 19,076

TYPEWRITING MACHINE

Original Filed March 22, 1926 3 Sheets-Sheet 3

Fig. 7.

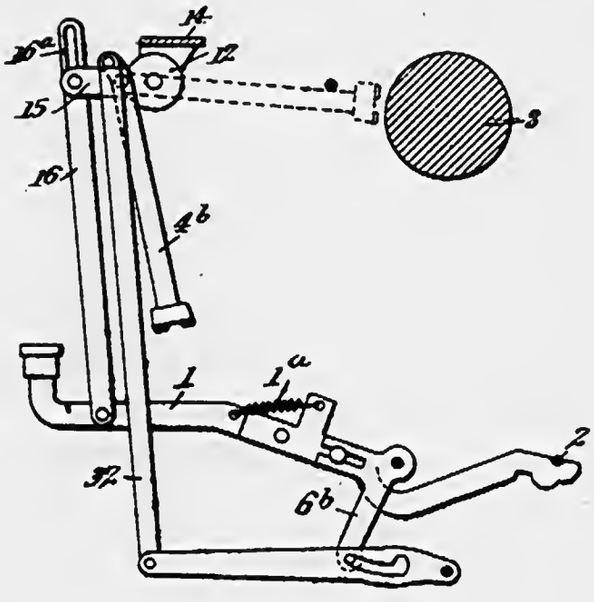

Fig. 8.

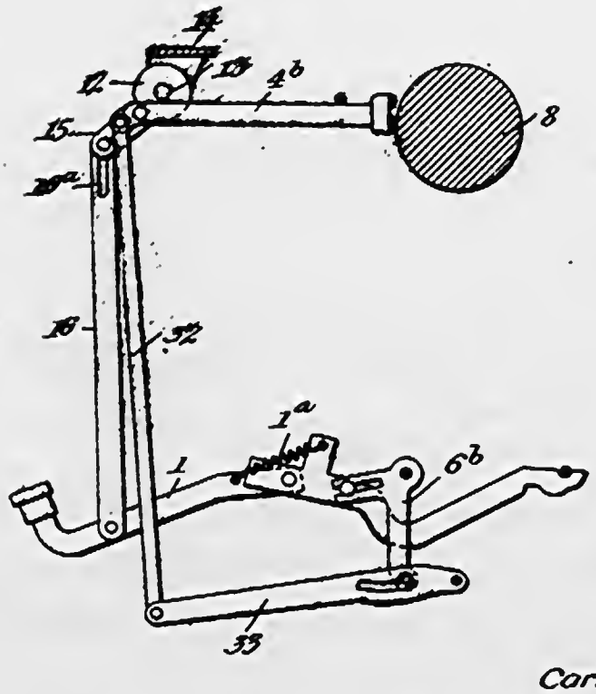

9
16

Inventor
Carl A. Joerissen.

By Cushman, Bryant & Darby
Attorneys

197 Sonogl

1846339

NUMBER (Series of 1925)

PATENT NO.

1926

DATED FEB 23 1932

DIV. 38

EX'R'S BOOK ~~248~~ 9 ~~127~~ 56

Name CARL A. JOERISSEN

Reviewed Feb 13, 1934 # 19.07

of WASHINGTON,

~~State of~~ DISTRICT OF COLUMBIA

Invention TYPEWRITING MACHINES

Division of App., No. ....., filed ....., 19....

ORIGINAL	RENEWED
APPLICATION FILED COMPLETE MAR 22, 1926	16 a22
PARTS OF APPLICATION FILED: Petition, Specification, Oath, First Fee $20, ___ sheets Drawings, MAR 22, 1926	
Drawings Transferred to Ser# 702611	
Examined and passed for Issue JUL 22 1931, 192	Reexam'd and passed for Issue ....., 192
E. F. Dawson Exr. Div. 58	Exr. Div. .....
Notice of Allowance JUL 22 1931, 192 By Commissioner.	Notice of Allowance ....., 192 By Commissioner.
Final Fee $25 Jan 22, 1932	Final Fee ....., 192

Attorney CUSHMAN, BRYANT & DARBY LOAN & TRUST BLDG CITY

Associate Attorney

28 Per Rule 72

No. of Claims Allowed 22 Print Claims 1 in O. G. Class 197/25

Title as Allowed Typewriting Machine

168

339

5711

Application for U. S. Letters Patent 96602

CUSHMAN, BRYANT & DARBY
ATTORNEYS AT LAW
COUNSELORS IN PATENT CAUSES
WASHINGTON LOAN & TRUST BLDG.
700 F STREET, NORTHWEST
WASHINGTON, D. C.

U. S. PATENT OFFICE
PAPER No.
MAR 31 1926
DIVISION 30

20.4

Petition

To the Honorable Commissioner of Patents
Washington, D. C., U. S. A.

Your petitioner CARL A. JOERISSEN,

a *citizen of the United States,*

residing at Washington ~~in the County of~~

~~and State of~~ in the District of Columbia, *and whose post-office address*

is 1413 New York Ave. N.W. Washington, D. C.,

pray that Letters Patent may be granted to

him *for the improvement in*

TYPEWRITING MACHINES,

set forth in the annexed specification.

And he *hereby appoint* CUSHMAN, BRYANT & DARBY, *a firm composed of Arlon V. Cushman, Arthur L. Bryant and John J. Darby, Jr., of the City of Washington, District of Columbia, whose register number is 7196,* his *attorneys, with full power of substitution and revocation, to prosecute this application, to make amendments therein, to sign* his *name to the drawings, to receive the Letters Patent, and to transact all business in the Patent Office connected therewith.*

Carl A. Joerissen

(Write first name in full)

Place 25¢
Rev. Stp.
Here.

Specification

To All Whom it May Concern

Be it Known, *that* I, CARL A. JOERISSEN,

a *citizen of the United States,*

residing at Washington, ~~in the County of~~

~~and State of~~ in the District of Columbia, *have invented new and useful improvements in*

TYPEWRITING MACHINES,

~~*of which the following is a specification.*~~

96602

237 Supreme Court of District of Columbia

Equity 56,895

JOERISSEN

v.

REMINGTON RAND, INC.

Plaintiff's Exhibit 4.

238 390

Department of Commerce

United States Patent Office

To all persons to whom these presents shall come, Greeting:

This Is To Certify that the annexed is a true copy from the records of this office of the File Wrapper, Contents and all Drawings, in the matter of

Letters Patent of Carl A. Joerissen, Number 1,846,339, granted February 23, 1932, for Improvement in Typewriting Machines.

In Testimony Whereof I have hereunto set my hand and caused the seal of the Patent Office to be affixed, at the City of Washington, this twenty-seventh day of November, in the year of our Lord one thousand nine hundred and thirty-five and of the Independence of the United States of America the one hundred and sixtieth.

CONWAY P COE

(Seal) *Commissioner of Patents.*

Attest:

D. E. WILSON

Chief of Division.

(Here follow photostats marked pages 205, 216 to 222, 232 to 235, 239 and 240.)

The present invention relates to improvements in
241 typewriting machines, and particularly to means whereby the operation of such a machine is effected with a minimum amount of noise.

Particularly the object of the invention is to overcome the objectionable noise produced by the type bars striking the platen and to provide a key action whereby the type bars will be forced into printing relation with the platen by a positive movement, securing clear impressions, but without forcibly striking the platen.

I am aware that it has been heretofore proposed to
242 provide typewriter key actions in which the noise produced by the type bars striking the platen will be materially reduced, but by the present invention the movement of all the parts is positively effected through connections with the key lever, and without the necessity of employing auxiliary parts for imparting movement to the type bars.

While the invention hereinafter described may be employed in connection with typewriting machines having type bars of various forms and supported in different relations with regard to the printing roll or platen, I have illustrated embodiments thereof in connection with a type action, in which the type bars are pivotally supported and adapted to move upward and rearward into printing relation with a relatively elevated platen.

In the accompanying drawings:—

Figure 1 is an elevation of a typewriter key action embodying the present invention, certain parts of the machine being shown in section and the type bar being in its normal inactive position.

Figure 2 is a similar view showing the position of parts when the key lever has been partly depressed and the movement of the type bar toward printing relation with the platen checked.

Figure 3 is a similar view showing the relation of the parts on the completion of the depression of the key lever and the movement of the type bar into printing relation with the platen.

Figure 4 is a detail, on a slightly enlarged scale, of a portion of the connection between the key lever and the
243 type bar checking means.

Figures 5 and 6 are elevational views of a modification showing the parts, respectively, in the positions assumed when the type bar is at rest and in printing relation to the platen.

Figures 7 and 8 are views, respectively similar to Figures 5 and 6, of a slightly modified form of key action, embodying the invention.

In the drawings many of the parts are shown more
244 or less conventionally, and the views are, to a considerable extent, diagrammatic. There can, of course, be material variation as regards proportions and sizes of the several parts, and also considerable modification in many of the details without departing from the invention. Except where specifically referred to in the appended claims, it is not intended to limit the invention to the exact details shown, and the drawings are to be considered illustrative rather than restrictive of the invention.

In Figures 1 to 6 inclusive, I have illustrated the invention as embodied in a key action mechanism of substantially the type employed in the well known Underwood typewriting machine comprising a key lever 1 fulcrumed at its rear end upon a rod 2, and extending through slots in a comb plate or frame member 3. The type bar 4 is pivotally mounted upon a rod 5, which is of arc shape so that the several type bars of the machine lie in the form of a transversely curved basket.

Movement of the key lever 1 is transmitted to the type bar 4 by a sub-lever 6, fulcrumed at 7 on the machine frame. When the forward, outer, end of the key lever 1 is depressed, the type bar 4 will be caused to swing upward and rearward about its pivot 5 into printing relation with the platen 8 and the usual type guide 9 in the manner well understood.

In the drawings I have only illustrated a single key
245 action, and it will be understood that this is to be duplicated throughout the series of type bars in the ordinary manner.

10 designates a link which is pivotally supported at an intermediate point of its length, and has one end connected to the type bar 4. As shown, the pivot 11 of the link 10 is carried by a pivotally mounted fulcrum support 12, which is supported to rock about an axis 13 extending through the members of a depending comb plate or frame section 14. The fulcrum support 12 is provided with a forward extension 15 that engages a link or rod 16 extending upward from and pivotally connected at its lower end to the key lever 1.

The link or member 10 is eccentrically mounted on the fulcrum support 12, and it will be seen that as the type bar swings upward from its normal inactive position represented in Figure 1 to the substantialy vertical position shown in Figure 2, such member will be brought into such relation to the axis 13 of the fulcrum support and said bar as to check the swinging movement of the type bar just prior to its coming into contact with the platen.

The engagement of the link or rod 16 with the extension 15 of the fulcrum support 12 will, as the key lever continues to move downward from the position shown in Figure 2, cause a bodily rocking of the fulcrum support about the axis 13, thus moving the connecting member 10 in the direction of its length and positively forcing the type bar toward the platen, completing its movement into
246 printing relation therewith.

As shown in Figures 1 to 3, the stem of the type bar 4 is provided with a longitudinally extending slot 4*a*, into which projects a pin or stud at the inner end of the link or checking member 10, and a spring 17 connects the checking member 10, at the opposite side of its fulcrum 11 from the type bar, with the connecting link or rod 16 that extends upward from the key lever 1. The outer end of the link or checking member 10 may be slightly weighted, as indicated at 10*a*, so that this member will offer practically no resistance to the initial upward and rearward swinging movement of the type bar.

As shown, the link or connecting rod 16 has formed therein adjacent its upper and a longitudinal slot 16*a* which receives a pin projecting laterally from the forward extension 15 of the pivotally mounted fulcrum support 12 and these parts are so related that the upper end of said slot 16*a*, will engage said pin on the fulcrum support substantially at the moment that the movement of the type bar into printing relation with the platen is checked as before described, at which time the connection of the checking member 10 with the type bar and the fulcrum 11 are in substantial horizontal alignment with the axis 13 of the fulcrum support.

Therefore, while the movement of the type bar toward printing relation with the platen will be checked there
247 will be no material interference with downward

movement of the key lever and the completion of the movement of the type bar into printing relation with the platen will be effected by a positive force exerted by pull of the link 16 on the extension 15 and a consequent movement in the direction of the length of the connecting member 10.

A spring 20 may be interposed between a portion of the typewriter frame, and the extension 15 of each fulcrum support to assist in returning the parts to normal position, the machine, of course, including the usual springs 21 for lifting the key levers after the same are relieved from pressure. As shown, the key levers 1 are of the common form including two pivotally connected sections having a coil spring 1*a* interposed between them, whereby the checking of the upward and rearward swinging movement of the type bar will not interfere with the downward movement of the key and outer end of the key lever through the required stroke.

If desired, each fulcrum support 12, may be provided with a short lateral projection 12*a*, which will extend over the upper edge of the checking member 10 when the parts are in the position shown in Figures 2 and 3, and, under the pull exerted by the spring 20 will assist in starting the turning movement of said checking member about its fulcrum so that it will not in any way interfere with the return of the type bar to its normal inactive position.

In the embodiment of the invention illustrated in Figures 5 and 6, the means for checking the movement of the
248 type bar toward printing relation with the platen includes a toggle, one member 30 of which is fulcrumed on the pivotally mounted fulcrum support 12, and the other member 31 of which is pivotally connected to the type bar 4. The forward end of the toggle member 30 is connected by a link 32 with a lever 33, which is arranged below the plane of the key lever 1, and is adapted to be rocked about its fulcrum 34 by the movement of a downwardly extending arm 6a of the sub-lever 6.

With this arrangement it will be seen that as the type bar moves from its normal inactive position shown in Figure 5 upward and rearward toward the platen 8, the members 30, 31, of the toggle will come into a substantially straight line relation, thus checking the movement of the

type bar, and when the fulcrum support 12 is rocked about its pivotal axis the toggle will exert a positive push upon the type bar, completing the movement thereof into printing relation with the platen.

A suitable stop 30*a* may be provided about the pivotal connection between the toggle members 30, 31, to prevent any possibility of this connection being moved upward beyond that in which the toggle members are in substantially straight line relation, as shown in Figure 6.

In the embodiment of the invention illustrated in Figures 7 and 8 the type bar, 4*b*, is pivoted directly to the pivotally mounted fulcrum support 12 and the outer end there-
249 of is connected by the link 32 with the lever 33.

A sub-lever 6*b* is interposed between the key lever 1 and the lever 33, so that the initial depression of the key lever will actuate the lever 33 and through its connection with the type bar swing the latter into alignment with the type guide 9 and the platen 8.

The extent of movement permitted the lever 33 is such that swinging movement of the type bar will be checked as said bar comes into substantial alignment with the axis of the fulcrum support 12 and the pivotal connection of the bar with said support.

The length of the type bar is such, and it is so related to the other parts, that with the several members in the relation described the printing head on the type bar will not touch the platen. However, as the fulcrum support 12 is rocked by the positive pull exerted through the connection 16, as the downward movement of the key lever continues, the type bar will receive a slight movement substantially in the direction of its length which will complete the movement of said bar into printing relation with the platen.

It is believed that the operation and advantages of the invention will be readily understood from the foregoing description in connection with the drawings. It will be seen that the invention provides a very simple means for preventing the sudden striking of the type bars against the platen, which is the cause of the objectionable noise incident to operating such machines. By the arrangement of parts described, the movement of the type bar into
250 printing relation with the platen is checked and the

Having thus described the invention, what is claimed as new is:-

1. ~~In a typewriting machine, the combina~~tion of a platen, a depressible key lever, a type bar movable to and from printing relation with the platen, means controlled by a ~~partial~~ depression of the key lever for effecting initial movement of the type bar toward the platen, means for checking such movement of the type bar without affecting movement of the key lever, and means actuated by ~~further~~ movement of the key lever for ~~effecting~~ completion of movement of the type bar into printing relation to the platen.

2. ~~In a typewriting~~ machine, the combination of a platen, a key lever, a pivotally mounted type bar movable to and from printing relation with the platen, means controlled by actuation of the key lever for effecting initial movement of the type bar toward the platen, and supplemental means ~~providing a positive connection between the key lever and type bar~~ and effecting the completion of the movement of the type bar toward the platen.

3. ~~In a typewriting~~ machine, the combination of a platen, a key lever, a type bar movable to and from printing relation with the platen, means actuated during the first portion of an operative movement of the key lever for effecting initial movement of the type bar toward the platen,

Insert A5B3 p a p a p a Insert A6 p a p a

and supplemental means ~~for establishing a positive connection between the key lever and type bar~~ A5B3 for completing the movement of the type bar toward the platen ~~during a later portion of an operative movement of the key lever~~ A6.

4. In a typewriting machine, the combination of a platen, a depressible key lever, a pivoted type bar, means controlled by depression of the key lever for effecting initial movement of the type bar toward the platen, and supplemental means providing a positive B4 connection between the key lever and type bar and effecting the completion of the movement of the type bar toward the platen.

Insert B4

Can Sir C

4 ~~5.~~ In a typewriting machine, the combination of a platen, a key lever, a type bar movable to and from printing relation with the platen, means controlled by actuation of the key lever for effecting initial movement of the type bar toward the platen, means for checking the movement of the type bar toward the platen including a pivotally mounted member connected to the type bar, and means for connecting the key lever and said pivotally mounted member during a portion of an operative movement of the key lever for positively moving said member to effect completion of a movement of the type bar toward the platen.

2 ~~6.~~ In a typewriting machine, the combination of a platen, a depressible key lever, a pivotal type bar mounted to swing upward and rearward into

printing relation with the platen, means controlled by actuation of the key lever for effecting initial movement of the type bar toward the platen, means for checking the movement of the type bar toward the platen including a pivotally mounted member connected to and extending forward from the type bar, and means for establishing a connection between the key lever and said pivotally mounted member for positively moving said member to effect completion of a movement of the type bar toward the platen.

6

---

3 ~~2~~. In a typewriting machine, the combination of a platen, a key lever, a type bar movable to and from printing relation with the platen, means controlled by actuation of the key lever for effecting initial movement of the type bar toward the platen, means for checking the movement of the type bar toward the platen including a member pivotally supported in advance of the platen and connected to the type bar, and means connected with the key-lever for moving said member about its pivotal support to effect completion of a movement of the type bar to printing relation with the platen.

Insert B5

Insert B2

4 ~~3~~. In a typewriting machine, the combination of a platen, a depressible key lever, a type bar movable to and from printing relation to the platen, means controlled by depression of the key lever for effecting initial movement of the type bar toward the platen, means for checking such movement of

the type bar including a member connected to said bar and extending at an angle to the length of the bar when its movement toward the platen is checked, and means including a member extending upward from the key lever for positively actuating said first-mentioned member to effect completion of movement of the type bar into printing relation with the platen.

~~8.~~ In a typewriting machine, the combination of a platen, a depressible key lever, a type bar movable to and from printing relation to the platen, means controlled by depression of the key lever for effecting initial movement of the type bar toward the platen, means for checking such movement of the type bar including a member connected to said bar and extending substantially at right angles to the length of the bar when its movement toward the platen is checked, and means adapted to be positively actuated by the key lever for imparting a substantially longitudinal movement to said member to effect completion of movement of the type bar into printing relation to the platen.

~~10.~~ In a typewriting machine, the combination of a platen, a key lever, a type bar movable to and from printing relation with the platen, means controlled by actuation of the key lever for effecting initial movement of the type bar toward the platen, means for checking the movement of the type bar toward the platen, including a pivotally mounted member connected to the type bar, and supplemental means connected with the key lever and adapted to

completion of such movement is caused by a positive connection between the key lever and the type bar.

It will be seen that whether a special checking means made as a single member extending continuously from its pivotal connection with the fulcrum support 12 to the type bar or in the form of a toggle, as illustrated in Figures 5 and 6, is interposed between the fulcrum support and the type bar or the latter is pivotally connected directly to said support the turning of said support which effects the completion of the type bar movement to printing relation with the platen is due to a positive connection with the key lever.

In the drawings I have illustrated a key action located approximately at the middle, transversely, of the machine and wherein the link connections 16 and 32 may be perfectly straight, one piece, elements. The corresponding parts of key actions situated at or nearer the ends or sides of the type bar basket will, of course, have to be slightly modified, the exact form of each said connection depending upon the location of the particular key action in the machine.

However, in all instances there is a positive connection between the key lever and the fulcrum support for the checking means for rocking said support and effecting a movement in the direction of the length of said means for effecting completion of the movement of the type bar to
251 printing relation to the platen.

(Here follow photostats marked pages 252, 253, 254 and 255.)

positively rock said pivotal member during the latter
256 portion of an operative movement of the key lever to effect completion of movement of the type bar into printing relation to the platen.

7. In a typewriting machine, the combination of a platen, a key lever, a type bar movable to and from printing relation with the platen, means controlled by actuation of the key lever for effecting initial movement of the type bar toward the platen, means for checking the movement of the type bar toward the platen including a pivotally mounted member connected to the type bar, a pivotally mounted fulcrum support for said member, and means for connecting the key lever and said fulcrum support whereby

downward movement of the key after movement of the type bar has been checked will rock said fulcrum support and move said member in the direction of its length to effect completion of movement of the type bar into printing relation to the platen.

8. In a typewriting machine, the combination of a platen, a key lever, a type bar movable to and from printing relation with the platen, means controlled by actuation of the key lever for effecting initial movement of the type bar toward the platen, means for checking the movement of the type bar toward the platen including a pivotally mounted member connected to the type bar, a pivotally mounted fulcrum support for said member, and a rod extending upward from the key lever and adapted as the key
257 is depressed beyond the position assumed when movement of the type bar toward the platen is checked to engage and positively rock the fulcrum support to move said member in the direction of its length to effect completion of movement of the type bar into printing relation to the platen.

9. In a typewriting machine, the combination of a platen, a depressible key lever, a pivoted type bar adapted to swing upward and rearward into printing relation to the platen, a sub-lever interposed between the key-lever and type bar and adapted to effect initial movement of the type bar toward the platen as the key lever is depressed, means for checking such movement of the type bar including a member connected to the type bar and extending substantially horizontally therefrom when movement of the type bar is checked, and a rod extending upward from the key lever and adapted, as said lever is depressed beyond the position assumed when movement of the type bar is checkd, to move said member in the direction of its length to effect completion of the movement of the type bar to printing relation to the platen.

10. In a typewriting machine, the combination of a platen, a depressible key lever, a pivoted type bar adapted to swing upward and rearward into printing relation to the platen, a sub-lever interposed between the key-lever and type bar and adapted to effect initial movement of the type bar toward the

(Here follow photostats marked 258, 259, 260.)

platen as the key lever is depressed, means for checking such movement of the type bar including a pivotally mounted member connected to the type bar and projecting laterally therefrom when movement of the type bar is checked, a pivotal fulcrum support for said member, and means actuated by depressing the key lever beyond the position assumed when movement of the type bar is checked for positively moving the fulcrum support of said member to cause the latter to effect completion of movement of the type bar into printing relation to the platen.

~~15.~~ 11 In a typewriting machine, the combination of a platen, a key lever, a type bar movable to and from printing relation with the platen, means controlled by actuation of the key lever for effecting initial movement of the type bar toward the platen, means for checking the movement of the type bar toward the platen (2) B7 including a pivotally mounted member connected to the type bar, and a connecting means extending upward from the key lever and adapted as the key lever is depressed beyond the position assumed when movement of the type bar is checked to engage and positively rock said pivotally mounted member to effect completion of movement of the type bar to printing relation to the platen.

Insert B7

~~16.~~ 12 In a typewriting machine, the combination of a platen, a key lever, a pivotally mounted type bar, means controlled by actuation of the key lever for effecting initial swinging movement of the type bar toward the platen, (4) B8 and supplemental means posi-

Substitute E1

Insert Ans Pert

96602

19

Insert B3 fol

tively actuated by the key lever, ① for effecting completion of movement of the type bar to printing relation to the platen in a substantially straight line direction.

~~17.~~ 13 In a typewriting machine, the combination of a platen, a key lever, a type bar movable to and from printing relation with the platen, means controlled by actuation of the key lever for effecting initial movement of the type bar toward the platen, means for checking the movement of the type bar toward the platen ② including a link-like member pivotally supported in advance of the platen and having its rear end connected to the type bar, and means connected with the key-lever for moving the link ~~about~~ relative to its pivotal support to effect completion of a movement of the type bar toward the platen.

Insert B9

15 fra

mark off

~~18.~~ 14 In a typewriting machine, the combination of a platen, a key lever, a type bar movable to and from printing relation with the platen, means controlled by actuation of the key lever for effecting initial movement of the type bar toward the platen, means for checking the movement of the type bar toward the platen, including a pivotally mounted member connected to the type bar, and supplemental means connected with the key lever and adapted to positively shift the fulcrum of said pivotal member during the latter portion of an operative movement of the key lever to move said member in the direction of its length to effect completion of movement of the type bar into printing relation to the platen.

Insert B10 Claim 15 fols

96602

20

Insert 3 fol

tively actuated by the key lever, for effecting completion of movement of the type bar to printing relation to the platen in a substantially straight line direction.

~~17.~~ 13 In a typewriting machine, the combination of a platen, a key lever, a type bar movable to and from printing relation with the platen, means controlled by actuation of the key lever for effecting initial movement of the type bar toward the platen, means for checking the movement of the type bar toward the platen, including a link-like member pivotally supported in advance of the platen and having its rear end connected to the type bar, and means connected with the key-lever for moving the link ~~about~~ relative to its pivotal support to effect completion of a movement of the type bar toward the platen.

Insert B9

15 fra

mark off

~~18.~~ 14 In a typewriting machine, the combination of a platen, a key lever, a type bar movable to and from printing relation with the platen, means controlled by actuation of the key lever for effecting initial movement of the type bar toward the platen, means for checking the movement of the type bar toward the platen, including a pivotally mounted member connected to the type bar, and supplemental means connected with the key lever and adapted to positively shift the fulcrum of said pivotal member during the latter portion of an operative movement of the key lever to move said member in the direction of its length to effect completion of movement of the type bar into printing relation to the platen.

Insert B10 Claim 15 fols

96602

20

5731

In testimony whereof I have hereunto set my hand.

Carl A. Joerissen

(Write first name in full.)

Oath

~~XXXXXX~~ DISTRICT OF COLUMBIA ss.

~~XXXXXX~~

CARL A. JOERISSEN,

the above-named petitioner, being duly sworn, depose and says that he is a citizen of the United States, and resident of the City of Washington, in the District of Columbia,

and that he verily believes himself to be the original, first, and sole inventor of the improvement in TYPEWRITING MACHINES,

described and claimed in the annexed specification; that he does not know and does not believe that the same was ever known or used before his invention or discovery thereof; or patented or described in any printed publication in any country before his invention or discovery thereof or more than two years prior to this application; or in public use or on sale in the United States for more than two years prior to this application; that said invention has not been patented in any country foreign to the United States on an application filed by him or his legal representatives or assigns more than twelve months prior to this application, and that no application for patent on said improvement has been filed by him or his representatives or assigns in any foreign country.

Carl A. Joerissen

(Write first name in full.)

Sworn to and subscribed before me, this 22nd day of March 1926.

Benjamin P. Dowell

[SEAL] (Notary sign here.) Notary Public.

Acknowledgement should be made before a Notary Public, WHO MUST AFFIX HIS SEAL. If Notary has no seal, a certificate of the Judge or Clerk of the Court showing that the Notary is qualified, must be attached. If the oath is taken before a Justice of the Peace, a certificate of the Judge or Clerk of the Court showing that such Justice is qualified, must be attached.

APPLICATION DIV. DEC 13 1926 U.S. PATENT OFFICE

U. S. PATENT OFFICE
PAPER No 3-a
DEC 14 1926

IN THE UNITED STATES PATENT OFFICE

DIVISION 30

In re Application of
Carl A. Joerrissen, for
TYPEWRITING MACHINES,
Filed March 22, 1926,
Serial No. 96,602. Division 30.

- -

December 13th, 1926.

Hon. Commissioner of Patents,
Washington, D. C.

Sir:-

The above entitled application is hereby amended as follows:-

IN THE CLAIMS:-

Claim 1:

Line 4, cancel "partial".

Line 8, before "and" insert --including a pivotally mounted member connected with the type bar--

Line 9, cancel "further".

Line 10, cancel "effecting" and substitute --rocking said pivotally mounted member to effect--

Claim 2:

Line 2, before "type" insert --pivotally mounted--

Line 6, before "and" insert --means for checking such movement of the type bar without affecting movement of the key lever, including a pivotally mounted member connected with the type bar--

Cancel beginning with "provid-", line 6, to and including "type bar", line 8, and substitute --actuated by the key lever for rocking said pivotal member--.

Claim 3:

Line 7, before "and" insert --means for checking movement of the type bar toward the platen including a member pivotally supported in advance of the platen--

Cancel beginning with "for", line 7, to and including the first word "bar", line 9, and substitute --actuated by the key lever for rocking said pivotally mounted member--

Cancel beginning with "during", line 10, to and including line 11.

Claim 8:

Line 11, after "said" insert --first mentioned--

Claim 17:

Line 11, cancel "about" and substitute --relative to--

REMARKS.

As thus amended, the application is believed to be placed in condition for allowance.

Claims 1, 2, and 3 have been so amended that each of them will very definitely and clearly distinguish applicant's improvements from the disclosure of the patent to Eriksen, cited. The Eriksen machine does not include any member such as the "pivotally mounted member" 12 of applicant's construction, in the connection between the key lever and type bar, as is specifically referred to in each of these claims. The type carrier of the Eriksen machine is bodily moved first over the platen, and then rocked "about a fulcrum formed by the top edge of the plate 10". This is quite a different arrangement from that provided by applicant, and which is clearly set forth in claims 1, 2, and 3, as amended.

Claims 4 and 16, of which reconsideration is requested, very definitely distinguish applicant's invention from the machine of the Eriksen patent. Each of these claims speci-

261 Div. 30 Room 248 AS/H Paper No. 2 Department of Commerce, United States Patent Office, Washington. Please find below a communication from the Examiner in charge of this application.

THOMAS E. ROBERTSON,
Commissioner of Patents

Applicant: Carl A. Joerissen, Ser. No. 96,602. Filed Mar. 22, 1926. For Typewriting Machines. Mailed Jun-8 1926

Cushman, Bryant & Darby, Loan and Trust Bldg., City.

Reference made of record: Eriksen, 1,565,554, Dec. 15, 1925, 197-25.

In claim 8, line 11, before "member" insert *first-mentioned.*

Claims 1, 2, 3, 4 and 16 are rejected on the patent to Eriksen, cited.

Claims 7, 10, 15 and 17 are rejected as inaccurate. In these claims the means for effecting completion of the movement of the type bar to printing relation with the platen is defined as a means for moving the member 10 about its pivotal support or as a means for positively rocking said member 10. This appears to be inaccurate. According to the specification, the member 10 is not rocked about its pivotal support during the final movement of the type bar, but it is moved in the direction of its length.

Claims 5, 6, 8, 9, 11, 12, 13, 14 and 18 are allowed.

J. L. SHIPMAN
Acting Examiner.

A.S.

(Here follow photostats marked pages 262 and 263.)

fically includes as an element "a *pivoted* type bar".
264 The type carrier of the Eriksen patent is not a pivoted type bar, and it is believed that upon reconsideration, these two claims will be found to be allowable.

Replying to the criticism made in the Official letter of claims 7, 10, 15, and 17, applicant submits that these claims do not, as suggested, describe that "the member 10" is rocked about its pivotal support. Specifically, in the embodiment of the invention illustrated, the "member pivot-

ally supported in advance of the platen" (claim 7) is the fulcrum support 12. This same element is the one referred to in the other claims. Claim 17 has been slightly amended to make this perfectly clear.

An allowance of the application is requested.

Respectfully,

CUSHMAN BRYANT & DARBY
Attorneys for applicant.

ALB:L

265 Div. 30 Room 248 AS/A Paper No. 4. Department of Commerce, United States Patent Office, Washington. Please find below a communication from the Examiner in charge of this application. Mar. 16, 1927.

THOMAS E. ROBERTSON
Commissioner of Patents.

Applicant: Carl A. Joerissen Ser. No. 96,602 Filed Mar. 22, 1926 For Typewriting Machines

Cushman, Bryant & Darby, Loan & Trust Bld., Washington, D. C.

Responsive to amendment filed Dec. 13, 1926.

Additional reference made of record: Going, 1,471,153, Oct. 16, 1923, 197-25.

Claims 1, 2, 3, 4 and 16 are fully met by Going and are rejected thereon.

Claim 7 is misleading if interpreted as in applicant's argument. The member 12 is not directly connected to the typebar and as the element 10 is in other claims defined as the element connected to the typebar and the element 12 will not of itself be sufficient to check the typebar movement, the claim is incomplete and misleading.

Claim 7 is therefore rejected as indefinite and is further rejected on Going.

Claims 10, 15 and 17 are rejected for the reasons given for claim 7.

The remaining claims stand allowed.

J L SHIPMAN
Examiner.

A.S.

(Here follow photostats marked pages 266, 267 and 268.)

189

MAR 12 1928 U.S. PATENT OFFICE

U. S. PATENT OFFICE
PAPER No. 5-B
MAR 13 1928
DIVISION 30

IN THE UNITED STATES PATENT OFFICE

In re Application of
C. A. Joerissen, for
TYPEWRITING MACHINES,
Filed March 22, 1926,
Serial No. 96,602. Division 30.

- - - -

March 12, 1928.

Hon. Commissioner of Patents,
Washington, D. C.

Sir:-

The above entitled application is hereby amended as follows:

IN THE CLAIMS:

Claim 1:

Line 7, after "bar" insert -prior to its reaching printing relation to the platen and-

Cancel the matter inserted in line 6 of claim 2 by amendment dated December 13, 1926, and substitute -means for checking such movement of the type bar prior to its reaching printing relation to the platen and without affecting movement of the key lever, including a pivotally mounted member connected with the type bar,-

Cancel the insertion made in line 7 of claim 3 by amendment dated December 13, 1926, and substitute the following: -means for checking movement of the type bar toward the platen prior to its coming into printing relation to the platen and including a member pivotally supported in advance of the platen.-

Claim 4:

Line 5, before "and" insert -means for pivotally checking such movement of the type bar prior to its coming into printing relation to the platen,-

B3 Bet

Claim 7:

Line 7, after "platen" insert -prior to its coming into printing relation to the platen-

3

Claim 10:

Line 7, before "including" insert -prior to its coming into printing relation to the platen and-

B6

Claim 15:

Line 7, after "platen" insert -prior to its coming into printing relation to the platen and-

Claim 16:

Line 5, before "and" insert -means for checking movement of the type bar toward the platen prior to its coming into printing relation to the platen,-

Sub E1 B8

Claim 17:

Line 7, after "platen" insert -prior to its reaching printing relation to the platen-

B9

Add the following claims:

-- 19. In a typewriting machine, the combination of a platen, a type carrier mounted to swing upward to printing relation to the platen, a fulcrum support mounted to rock about an axis extending substantially parallel to the axis about which the type carrier swings, a key lever, and means actuated by the key lever whereby when the lever is operated the type carrier will be swung upward about its axis, independent of movement of the fulcrum support, ~~said~~ movement of the type carrier ~~being checked~~ prior to the carrier reaching printing relation to the platen, and ~~thereafter~~ the fulcrum support ~~will be~~

B10

Sub C

Sub E

type carrier for checking [illegible]

means intermediate the fulcrum support and

means for [illegible]

-2-

28

bodily ~~rocked~~ about its axis to effect completion of the movement of the type carrier toward the platen.

20. In a typewriting machine, the combination of a platen, a type carrier mounted to swing upward to printing relation to the platen, means for checking movement of the type carrier toward the platen prior to the carrier coming into printing relation to the platen including a pivotally mounted member which remains stationary until said movement of the type carrier is checked and is thereafter bodily rocked to effect completion of movement of the type carrier to printing relation to the platen, a key lever, and means actuated by operation of the key lever for effecting successively movement of the type carrier and said pivotally mounted member.

Claim 16-19 folo

REMARKS

An allowance of the application as thus amended is requested.

The claims rejected by the last Official letter have been slightly amended so that each of them will unmistakably distinguish applicant's improvements from the disclosure in the patent to Going cited.

Applicant's invention differs radically from that of the reference structure. As clearly set forth in the specification and specifically referred to in the claims as amended, an essential feature of the present invention is that the movement of the type carrier toward the platen is positively checked prior to its reaching printing relation with the platen and the printing movement of the carrier is completed by a rocking of the fulcrum support 12 after such checking.

According to the reference structure "the printing" stroke of the type bar is silently limited by the ex-

tension of links 26 and 30, printing the pivotal points
269 28, 29 and 31 into lin2" (page 2, lines 12 to 15).

This, it will be noted, is quite different from applicant's construction in which, as above noted, the connection between the pivotally mounted member 12 and the type carrier positively checks movement of the type carrier toward the platen prior to the carrier reaching printing relation with the platen and the printing stroke is completed by movement of said fulcrum support.

With the reference structure there is no movement of the type carrier after it has been checked by the links 26 and 30 coming into alignment. The "*stationary* bracket plate 27" of the Going machine is not the equivalent, and does not perform the function of, the fulcrum support 12 of applicant's mechanism.

Replying to the Examiner's criticism of claim 7, it is pointed out that this claim is definite and properly descriptive of applicant's construction. Applicant has not stated that the member 12 is "*directly* connected to the type bar" as assumed by the Examiner, but, as pointed out in the claim, the member 12, which is "pivotally supported in advance of the platen" is connected to the type bar. A reconsideration of the rejection of this claim on the ground of its being indefinite is, therefore, requested. The claim has been slightly amended so that it will, as above pointed out, clearly distinguish applicant's construction from the construction of the Going patent. There is a radical difference in operation between the structures of the Going patent and that of the present case. The reference structure does not provide for first checking movement of the type carrier and then another movement to complete the
270 printing stroke. By the structure of the patent the toggle is brought to a straight line position at the conclusion of the printing stroke, whereas applicant, as specifically pointed out in the claims, checks such printing stroke prior to the carrier reaching printing relation to the platen, and then completes the printing stroke by a further rocking movement of an element. The reference structure may be considered to slow up movement of the type carrier, but does not positively check it prior to coming into printing relation to the platen.

This important difference is also brought out in the two additional claims hereby presented.

Very respectfully,

CUSHMAN BRYANT & DARBY
Attorneys for Applicant.

ALB:W

271 Div. 58 Room 270 Annex Paper No. 6. Department of Commerce, United States Patent Office, Washington. MAU:ERD Please find below a communication from the Examiner in charge of this application.

THOMAS E. ROBERTSON,
Commissioner of Patents.
Mailed Aug. 6, 1928.

August 6, 1928.

Applicant: Carl A. Joerissen Ser. No. 96602 Filed March 22, 1926 For Typewriting Machines.

Cushman, Bryant & Darby, Wash. Loan & Trust Bldg., Washington, D. C.

Responsive to amendment filed March 12, 1928.

The expression "pivotally checking" in the amendment to line 5 of claim 4 is objected to as being indefinite. If applicant means checking pivotal movement of a certain part, the claim should so state.

The rejection of the claims 1, 2, 3, 4, 7 and 16 on patent to Going is repeated. No patentable structural distinction over this patent is seen to be actually defined by the language of these claims.

Claims 10, 15, 17 and 20 are allowed.

Claim 19 is rejected as being functional.

The clause in lines 9 to 11 claims merely a result, while the mechanism by which this result is accomplished is not defined either in this clause or elsewhere in the claim. Likewise the clause in lines 11 to 13 further renders the claim functional for the same reasons.

E F DOWELL
Actg Examiner.
M. A. U.

(Here follow photostats marked pages 272, 273 and 274.)

APPLICATION DIV. JAN 4 29 U.S. PATENT OFFICE

U. S. PATENT OFFICE JAN 5 1929

IN THE UNITED STATES PATENT OFFICE

C. A. Joerissen,
TYPEWRITING MACHINES,
Filed March 22, 1926,
Serial No. 96,602. Division 58.

- - -

January 4, 1929.

Hon. Commissioner of Patents,
Washington, D. C.

Sir:

We hereby authorize and request entry of the following amendments in the above entitled application:

IN THE CLAIMS:

Cancel claims 1 to 4 inclusive and substitute the following, which it is requested may be numbered 1 to 4 inclusive when the application is allowed, namely:

1. In a typewriting machine, the combination of a platen, a depressible key lever, a type bar movable to and from printing relation with the platen, means controlled by depression of the key lever for effecting movement of the type bar toward the platen, means for checking such movement of the type bar prior to its reaching printing relation with the platen, including a pivotally mounted member connected with the type bar, and means, actuated by movement of the key lever after the movement of the type bar has been checked, for rocking said pivotally mounted member to effect completion of movement of the type bar into printing relation to the platen.

¶ 17

~~22.~~ In a typewriting machine, the combination of a platen, a key lever, a pivotally mounted type bar movable to and from printing relation with the platen, means controlled by actuation of the key lever for effecting movement of the type bar toward the platen, means for checking such movement of the type bar prior to its reaching printing relation with the platen, including a pivotally mounted member connected with the type bar, and supplemental means, actuated by the key lever after the movement of the type bar has been checked, for rocking said pivotal member and effecting completion of the movement of the type bar towards the platen.

¶ ~~23.~~ 18 In a typewriting machine, the combination of a platen, a key lever, a type bar movable to and from printing relation with the platen, means actuated during the first portion of an operative movement of the key lever for effecting movement of the type bar toward the platen, means for checking movement of the type bar toward the platen prior to the bar coming into printing relation to the platen, and including a member connected to the type bar and pivotally supported in advance of the platen, and supplemental means, actuated by the key lever after the movement of the type bar has been checked, for rocking said pivotally mounted member to effect completion of the movement of the type bar toward the platen.

¶ ~~24.~~ 19 In a typewriting machine, the combination of a platen, a depressible key lever, a pivoted type bar, means controlled by depression of the key lever for effecting movement of the type bar toward the platen, means movable with the type bar for checking such pivotal movement of the type bar prior to the bar coming into printing relation to the platen, and supplemental means providing a positive connection between the

key lever and type bar, after such movement of the type bar has been checked, and effecting completion of the movement of the type bar toward the platen.

Claim 7:

Line 11, place a comma after "support" and thereafter insert -after the movement of the type bar has been checked,-

Claim 16:

Line 6, place a comma after "lever" and thereafter insert -after the movement of the type bar has been checked,-

Claim 19:

Line 8, cancel "said" and substitute -means for checking such-

Lines 9 and 10, cancel "being checked"

Line 11, cancel "thereafter" and substitute -means for rocking-

Same line, cancel "will be"

Line 12, cancel "rocked"

Same line, place a comma after "axis" and thereafter insert -after movement of the type carrier has been checked-

REMARKS

An allowance of the application as thus amended is requested.

Claims 1 to 4 inclusive have been rewritten, in view of the fact that these claims have been several times amended, and to avoid the objection to amending an amendment.

In rewriting these claims they have also been slightly amended, and claims 7 and 16 have also been amended so that each of them will clearly include a "patentable structural distinction" over the disclosure of the patent to Going No. 1,471,153.

ATTORNEY'S ROOM
APR 3 1929
U. S. PATENT OFFICE

Washington, D. C.
March 27, 1929

Hon. Commissioner of Patents,
Washington, D. C.

Sir:

Please permit Watts T. Estabrook to inspect and make copies of my pending application for improvements in Typewriting Machines, filed March 22, 1926, Serial No. 96,602 within a period of thirty days from the date hereof.

Carl A. Joerissen

approved
E F Dowell

#9

CARL JOERISSEN

ATTORNEY'S ROOM
JUN 20 1929
U. S. PATENT OFFICE

Washington, D.C., June 17, 1929.

Hon. Commissioner of Patents,
Washington, D.C.

Sir:

Please permit Davis + Davis, Washington, D.C., to inspect and make copies of my pending applications for improvements in Typewriting Machines, as follows:

Serial No. 96,602, filed March 22nd, 1926.
Serial No.167734, filed Feb. 12, 1927.
Serial No.280,274, filed May 24, 1928.

This permission to extend for a period of thirty days from date hereof.

Respectfully,

Carl A. Joerissen

Approved
E. F. Davis

Cushman Bryant + Darby
Pl.

SEP 26 29
RECEIVED IN PATENT OFFICE
U. S. PATENT OFFICE
SEP 27 1929
DIVISION 58

IN THE UNITED STATES PATENT OFFICE

C. A. Joerissen,
TYPEWRITING MACHINES,
Filed March 22, 1926,
Serial No. 96,602. Div. 58.

* * *

September 26, 1929.

Hon. Commissioner of Patents,
Washington, D. C.

Sir:

The above entitled application is hereby further amended by adding the following claims:-

~~25. In a typewriting machine,~~ the combination of a platen, a type carrier movable to and from printing relation with the platen, and means for moving the type carrier into printing relation with the platen including devices for checking such movement prior to the type carriers contacting with the platen. and a pivotally mounted member adapted to be bodily rocked to cooperate with said checking devices in completing printing movement of the type carrier.

~~26. In a typewriting~~ machine, the combination of a platen, a type carrier movable to and from printing relation with the platen, and means for moving the type carrier into printing relation with the platen including a pivotally mounted member, and connections between said member and the type carrier adapted to check movement of the type carrier prior to the latters contacting with the platen, the completion of movement of the type carrier to printing relation with the platen being effected by a bodily rocking of said pivotally mounted member.

~~27. In a typewriting machine, the combination of a platen, a type bar movable to and from printing relation with the platen, and means for moving the type bar into printing relation with the platen comprising a pivotally mounted member and connections between said member and the type bar, adapted to check movement of the bar prior to its coming into contact with the platen, and including an arm extending substantially at right angles to the length of the type bar, the completion of movement of the type bar to printing relation with the platen being effected by a bodily rocking of said pivotally mounted member.~~

~~28.~~ 20 In a typewriting machine, the combination of a platen, a type carrier movable to and from printing relation with the platen, and means for moving the type carrier into printing relation to the platen including a normally collapsed toggle, the straightening of which acts to check movement of the type carrier prior to the latters contacting with the platen. and means for moving the toggle substantially in the direction of its length to complete the printing movement of the type carrier.

~~29.~~ In a typewriting machine, the combination of a platen, a type carrier movable to and from printing relation with the platen, and means for moving the type carrier into printing relation to the platen including a normally collapsed toggle, the straightening of which acts to check movement of the type carrier prior to the latters contacting with the platen, and a rocking member connected with and adapted to supplement the action of the toggle to complete printing movement of the type carrier.

~~30.~~ 21 In a typewriting machine, the combination of a platen, a type carrier movable to and from printing rela-

tion with the platen, and means for moving the type carrier into printing relation to the platen including a normally collapsed toggle, one member of which is adapted to move the type carrier as the toggle is expanded, a pivotally mounted support for the other toggle member, and means whereby the ~~last said member~~ support is rocked to supplement the action of the toggle in completing printing movement of the type carrier.

Claims 23-28 filed

REMARKS

It is believed that applicant is entitled to the foregoing claims in addition to those heretofore presented, as none of the prior patents of record shows a construction in which movement of a type carrier toward printing relation with a platen is checked prior to its coming into printing relation with the platen, and the printing movement is completed by the rocking of a pivotally mounted member.

Very respectfully,

Cushman Bryant & Kirby
Attorneys for Applicant.

ALB/B

275 As previously pointed out, the important radical difference between the structure of the Going patent and that of applicant's invention as described in these claims, is that in the reference structure when the movement of the type carrier is checked by the toggle members 26, 30, coming into straight line relation, the type head is at the limit of its movement and in printing relation to the platen. This is clearly described in the specification of the Going patent (see lines 11 to 15 and 79 to 85 of page 2).

By applicant's invention, as specifically set forth in the claims referred to, the checking of the movement of the type bar occurs *prior* to the bar coming into printing relation with the platen, and *thereafter* by a rocking of the pivotally mounted member referred to (specifically the member 12) the printing movement is completed.

The machine of the Going patent does not include any element having the function of the pivotally mounted member 12 of the embodiment of applicant's invention illustrated.

Claim 19 has been amended so as to be free from the informalities referred to in the Official letter. In its present form it is believed that the claim clearly defines the mechanism by which the novel "result is accomplished" and does not merely state "a result".

Very respectfully,

CUSHMAN, BRYANT & DARBY

ALB/W *Attorneys for Applicant.*

(Here follow photostats marked pages 276 to 280.)

281 Div. 58 Room 270 Annex Paper No. 11. Department of Commerce, United States Patent Office, Washington. JDB:ERD. Please find below a communication from the Examiner in charge of this application. October 4, 1929.

THOMAS E. ROBERTSON

Commissioner of Patents.

Mailed Oct. 4, 1929.

Applicant: Carl A. Joerissen
Ser. No. 96,602
Filed Mar. 22, 1926
For Typewriting Machines

Cushman, Bryant & Darby,
Loan & Trust Building,
Washington, D. C.

Responsive to amendment filed Sept. 26, 1929. Additional references made of record:—

Going, 1,282,410, Oct. 22, 1918, (197-25)
Going, 1,615,694, Jan. 25, 1927, " "
Going, 1,615,835, Feb. 1, 1927, " "

Claim 16 is rejected as not being readable on the drawing. The two separate and distinct means, one for checking the movement of the type bar and the other for effecting completion of the movement of the type bar, are not found. There appears to be but a single means disclosed by applicant for performing the two functions.

Claim 16 is further rejected on patent to Going, 1,615,835.

Claim 19 is rejected as being functional. The construction necessary to enable the fulcrum support to effect completion of movement of the type carrier toward the platen is not defined in the claim, and the statement of this result in the last two lines of the claim is unsupported by a definition of necessary structure. The claim fails to define any construction between the fulcrum support and the type bar, through which force may be transmitted from the fulcrum support to the type bar. It cannot be presumed that the "checking means" is capable of forming any part of the thrusting means for completing movement of the type bar in the absence of a definition in the claim.

Claim 19 is further rejected as not distinguishing from each of patents to Going, 1,615,835 and 1,615,694.

282 Claim 23 is rejected as being functional in the same respects as claim 19.

Claim 23 is rejected on patent to Going, 1,615,835 in view of patent to Going, 1,282,410. No invention is seen in substituting for the checking means 18, 19 of patent 1,615,835

20

PUBLICATION DIV.
APR - 1 30
U.S. PATENT OFFICE

IN THE UNITED STATES PATENT OFFICE

C. A. Joerissen,
For TYPEWRITING MACHINES,
Filed March 22, 1926,
Serial No. 96,602. Division 58.

APR 2 1930

DIVISION 58

Hon. Commissioner of Patents,
Washington, D. C.

Sir:-

In response to the Official letter of October 4, 1929, the above entitled application is amended as follows:

IN THE CLAIMS:

Claim 16:

Cancel the matter inserted in line 5 by amendment, dated March 12, 1928, and substitute: --means connected to and moving with the type bar for checking movement of such bar toward the platen prior to its coming into printing relation to the platen,--

Claim 19:

Line 9, cancel "means for checking such" and substitute --means intermediate the fulcrum support and type carrier for checking such--

Claim 23:

Line 8, after "member" insert --connected to the type bar and--

Claim 24:

Line 4, after "means" insert --movable with the type bar--

Claim 30:

Line 8, cancel "last said member" and substitute --support--

REMARKS

An allowance of the application as thus amended is requested.

The three (3) additional references made of record by the last Official letter, and cited as anticipating certain of the claims, have been carefully considered, as well as the finding that certain of the claims are informal.

Considering the several claims mentioned in the Official letter separately, it is noted:

Claim 16. Replying to the Examiner's criticism of this claim, it is submitted that the connecting bar 16 is a means "supplemental" to the "means for checking movement of the type bar toward the platen prior to its coming into printing relation to the platen" (namely, the parts 10 and 12).

In view of this, it is not understood how the Examiner can find that said claim is not "readable on the drawing".

Considering the rejection of this claim on the patent to Going No. 1,615,835, it is pointed out that in the construction of the reference the "oscillating lever 28" which is the means "for effecting completion of movement of the type bar to printing relation to the platen" is not "actuated by the key lever after the

another form of checking means such as links 25 and 26 of patent 1,282,410.

Claim 24 is rejected as failing to read on the drawing for the same reasons as claim 16.

Claim 24 is further rejected on patent to Going, 1,615,835.

Claim 25 is rejected as not distinguishing from any of patents to Going, 1,615,835, 1,471,153 or 1,615,694.

Claim 26 is rejected as being functional and incomplete because it defines no means for bodily rocking the pivotally mounted member to accomplish the functions stated in the last clause.

Claim 26 is rejected on patent to Going, 1,615,694.

Claim 27 is rejected for the same reasons as claim 26.

Claim 29 is rejected as being indefinite in not clearly pointing out how the pivoted member 12 can cooperate with the toggle to move the type bar to the platen.

Claim 29 is further rejected on each of patents to Going, 1,282,410, 1,615,694 and 1,471,153.

Claim 30 is rejected as being indefinite and misleading in line 8, but may be put in allowable form by changing the words "last said member" in line 8 to *support*.

Claims 7, 21, 22 and 28 are allowed.

E. F. DOWELL
Examiner.

(Here follow photostats marked pages 283 and 284.)

285 movement of the type bar has been checked" in the sense in which this phrase is employed as descriptive of applicant's construction. The oscillating lever 28 is moved by the key lever throughout the movement of the type bar.

A further difference between applicant's invention and the construction of the Going patent, however, is that by the invention the means for checking movement of the type bar is permanently connected to and moves with the type bar, whereas, in the structure of the Going patent, the checking means is the stationary stop 18, and claim 16 has, therefore, been amended to clearly bring out this additional difference.

Claim 19 has been amended to free it from the informality referred to in the Official letter.

Considering the rejection of this claim on the patents to Going Nos. 1,615,835 and 1,615,694, it is pointed out that in neither of the structures of the Going patents is the type bar checking means of the character now specifically described in the claim. In both of the reference structures, movement of the type bar toward the platen is checked by the stationary stop 18.

Claim 23 has been slightly amended so that it will unmistakably be free from the criticism made in the Official letter. Regarding the rejection of this claim on the patents to Going Nos. 1,615,835 and 1,282,410, applicant points out that even if invention were not involved in "substituting for the checking means 18, 19 of patent 1,615,835" the "links 25, 26 of patent 1,282,410", the imaginary structure thus produced would not meet the terms of this claim.

286 In the structures of neither of the Going patents referred to is there any "supplemental means" as described in the claim which is actuated "after the movement of the type bar has been checked for rocking" any "pivotally mounted member to effect completion of the movement of the type bar".

In the structure of Going patent No. 1,615,835, as before noted, the type bar checking means does not include any "pivotally mounted member" and similarly, such a member (which it is noted, is additional to the parts of applicant's construction corresponding to the links 25, 26, of the Gong patent No. 1,282,410) is entirely lacking in the structure of this reference.

A reconsideration of claim 24 is requested. The criticism that this claim does not correctly "read on the drawing" is not understood. As before pointed out in connection with claim 16, the connecting member 16 is clearly a "supplemental means providing a positive connection" etc. to the "means for checking" movement of the type bar.

This claim has been slightly amended so that it will unmistakably distinguish applicant's invention from the structure of the Going patent No. 1,615,835. In the reference structure the type bar checking means is a stationary bar 18, and no member of it is movable with the type bar.

A reconsideration of claims 25, 26 and 27 is requested. Each of these claims very definitely distinguishes applicant's improvements from the disclosures of the Going

patents cited. For example, claim 25 not only describes that the type carrier checking devices are included in
287 the "means for *moving the type carrier* into printing relation", but further describes that the "pivotally mounted member" is "adapted to be bodily rocked to cooperate with said checking devices in completing printing movement of the type carrier". In the structures of the Going patents Nos. 1,615,835 and 1,615,694, the means for checking movement of the type bar are not included in the means for "moving the type carrier into printing relation with the platen", and in none of the Going patents cited is the printing movement of the type carrier completed by bodily rocking the pivotally mounted member. As previously pointed out, with the construction of Going patent No. 1,471,153, the type head is at the limit of its movement and in printing relation to the platen when the toggle members 26, 30, come into straight line relation, whereas in applicant's invention, as specifically described in this claim, the bodily rocking of the pivotally mounted member occurs after the toggle members have come into relation to check movement of the type carrier.

Considering claims 26 and 27, it is pointed out that both of these claims very clearly distinguish applicant's invention from the Going patent No. 1,615,694, on which they were rejected.

As before noted, in the reference structure the means for checking movement of the type carrier is not a part of the "connections between" a pivotally mounted member and the "type carrier". In the reference structure the checking means is a stationary bar 18.

A reconsideration of claim 29 is also requested.
288 The criticism that this claim is indefinite is not understood. It positively describes that the "rocking member" included as an element is "connected with and adapted to supplement the action of the toggle".

Regarding the rejection of this claim on the Going patents Nos. 1,282,410, 1,615,694 and 1,471,153, it is pointed out that in the structures of both patents Nos. 1,282,410 and 1,471,-153, the printing movement of the type carrier is fully completed when the toggle members are straightened, and neither of these patents discloses a rocking member "adapted to supplement the action of the toggle to *complete printing movement* of the type carrier".

In the construction of the Going patent No. 1,615,694, there is no toggle for checking movement of the type carrier, but as hereinbefore pointed out, such movement is checked by a stationary bar 18.

Claim 30 has been amended to comply with the Examiner's suggestion.

An allowance of the case is requested.

Very respectfully,

CUSHMAN BRYANT & DARBY
Attorneys for Applicant.

ALB/W

289 Div. 58 Room 270 Annex Paper No. 13

Department of Commerce
United States Patent Office
Washington

LMS:ERD

Mailed Jan 14 1931

Please find below a communication from the Examiner in charge of this application. Thomas E. Robertson, Commissioner of Patents.

January 14, 1931
Applicant: Carl A. Joerissen
Ser. No. 96,602
Filed Mar. 22, 1926
For TYPEWRITING MACHINES

Cushman, Bryant & Darby,
Loan & Trust Building,
Washington, D. C.

Responsive to amendment filed April 1, 1930.

Reference numeral 34 does not appear on the drawings.

In Figs. 1 and 2, pin 12a is not in the same position on disk 12 as in Fig. 3 and the drawings should be corrected to make the illustration uniform. See also Fig. 4 in which the pin appears to be in a third position on disk 12.

Claim 19 is again rejected as being met by patent to Going, 1,615,694. The pressure means 24, 26 and 28 of this patent will operate as a checking means and the presence of a second checking means 19 in the patent does not appear to prevent the patent from meeting the claim.

a+
L. to Dr

14/
Jr

JUL 11 31

IN THE UNITED STATES PATENT OFFICE

C. A. Joerissen

TYPEWRITING MACHINES

Filed March 22, 1926

Serial No. 96,602. Div. 58.

* * *

July 8, 1931

Hon. Commissioner of Patents,
Washington, D. C.

Sir:

Enter
D

Replying to the Official Letter of January 14th, the Chief Draftsman, by a separate communication, has been requested to make slight corrections in Figures 3 and 4 of the drawing so that the relative location of the pin 12a in these Figures will agree with that of Figures 1 and 2.

The application is hereby further amended as follows:

IN THE CLAIMS

Cancel claims 19, 25, 26 and 27.

R E M A R K S

As thus amended the application is placed in condition for allowance.

Respectfully,

Cushman Bryant Darby & Cushman
Attorneys for Applicant.

ALB:MW

2 prints

APPLICATION DEPT. U.S. PATENT OFFICE JUL 11 31

IN THE UNITED STATES PATENT OFFICE

C. A. Joerissen

TYPEWRITING MACHINES

Filed March 22, 1926

Serial No. 96,602. Div. 58.

* * *

U.S. PATENT OFFICE JUL 18 1931 DIVISION OF

July 8, 1931

Hon. Commissioner of Patents
Washington, D. C.

ACCOUNT

Attention of Chief Draftsman

Sir:

Subject to the approval of the Examiner, the Chief Draftsman is hereby requested to change the location of the pin 12a on Figures 3 and 4 of the drawings of the application above referred to, as shown in red ink on the accompanying print, which it is requested may be returned after the correction has been made.

Charge the cost of this service to our account.

OK
EFD

Very respectfully,

Cushman Bryant Darby & Cushman

Attorneys for Applicant.

ALB:MW

RECEIVED IN DIV. C

JUL 17 1931

CORRECTION ORDERED

JUL 17 1931

50¢

ACCOUNT

DIV. C.

CORRECTED

JUL 17 1931

111/25

248/129

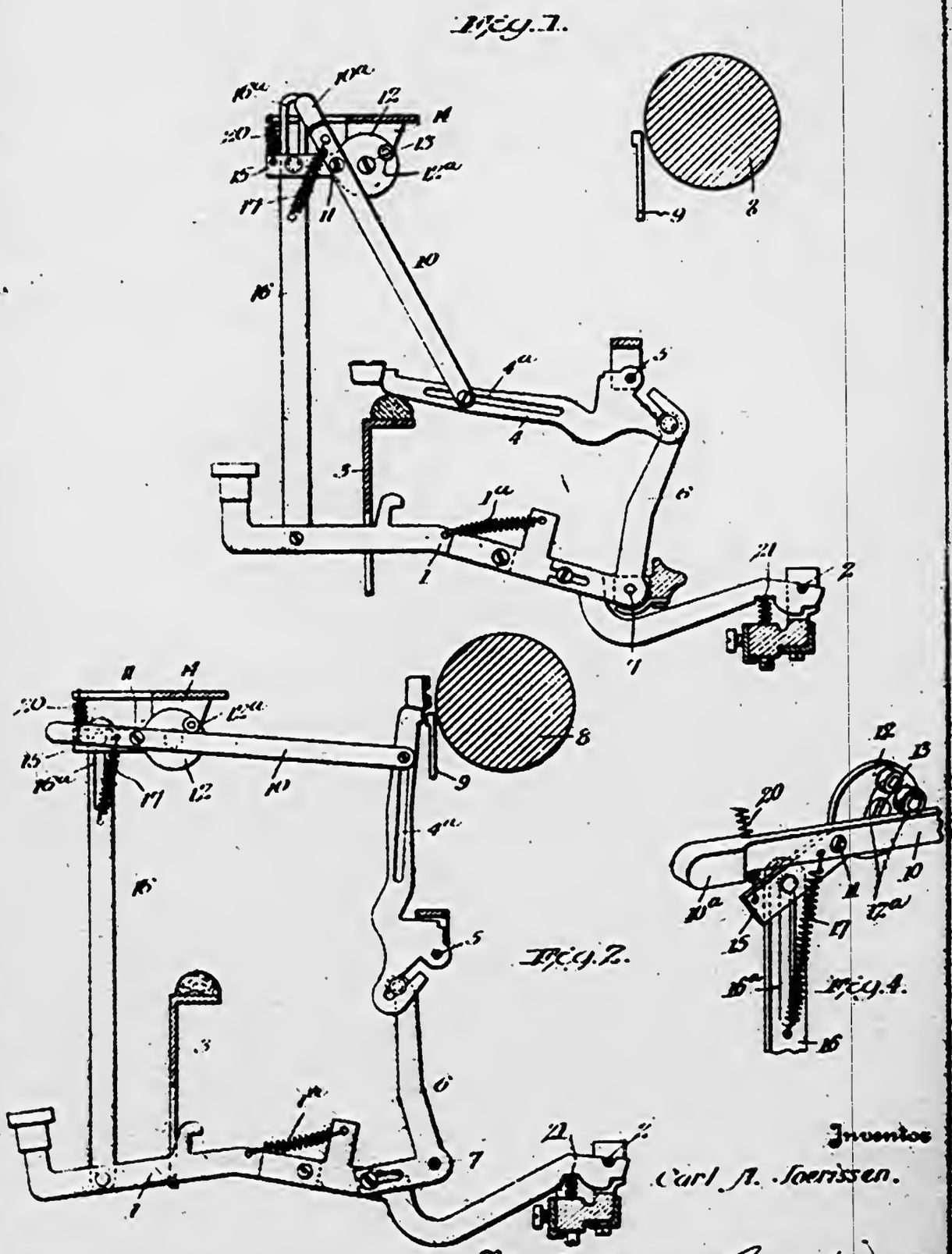

96632

Fig. 3.

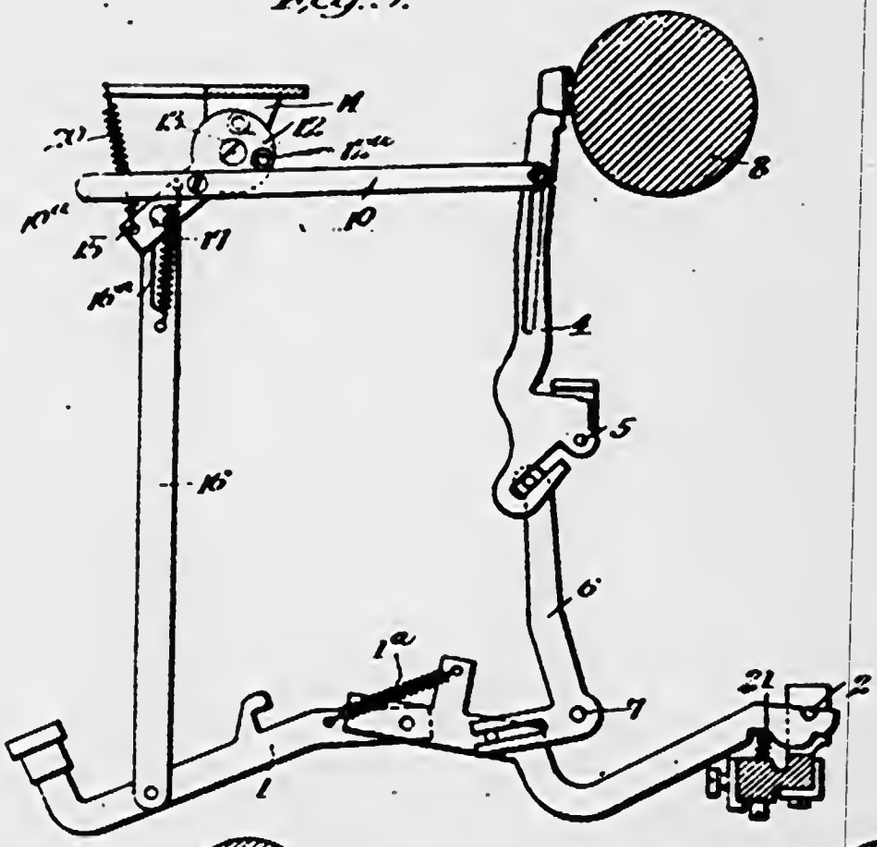

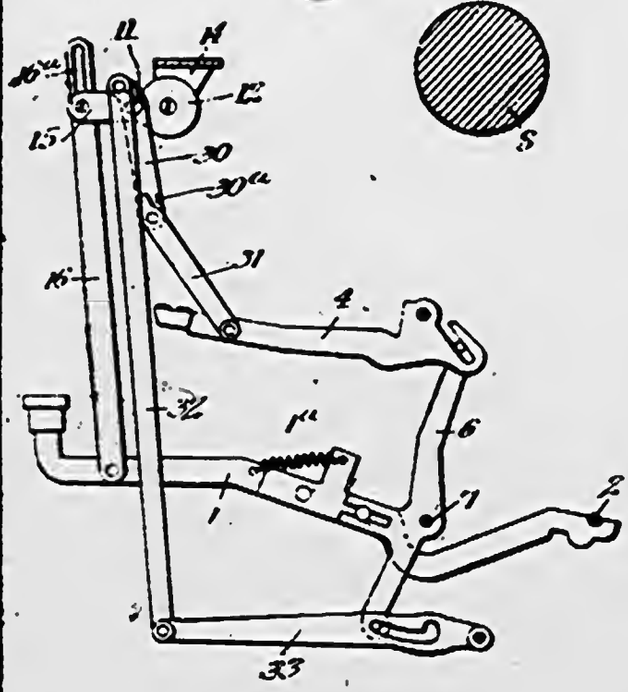

Fig. 5.

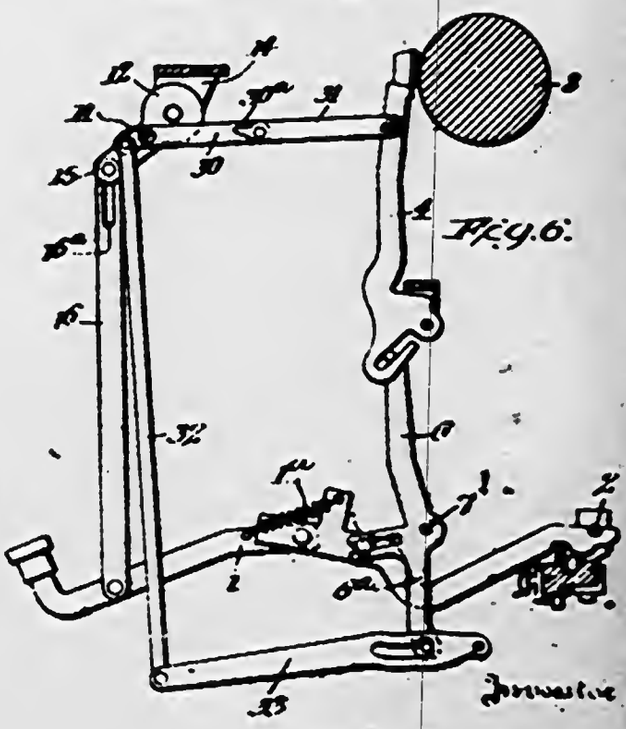

Fig. 6.

Inventor
Carl A. Joerissen

By Cushman, Bryant & Darby
Attorneys

APPLICATION DIV. JUL 11 31 U.S. PATENT OFFICE

Applicant: C. Ole Joerissen

Invention: Typewriting Machines

Filed: March 22-1926

Ser. No. 96602

JUL 13 1931 U.S. PATENT OFFICE

HON. COMMISSIONER OF PATENTS,

SIR:

We hereby substitute as attorneys in the above named case, Messrs. Cushman, Bryant, Darby & Cushman, a firm composed of Arlon V. Cushman, Arthur L. Bryant, John J. Darby and William M. Cushman (Reg. No. 7196), American Security Building, Washington, D. C.

Respectfully,

Cushman Bryant & Darby

July 8 1931

197
25

6339
Feb 23

Fig. 1.

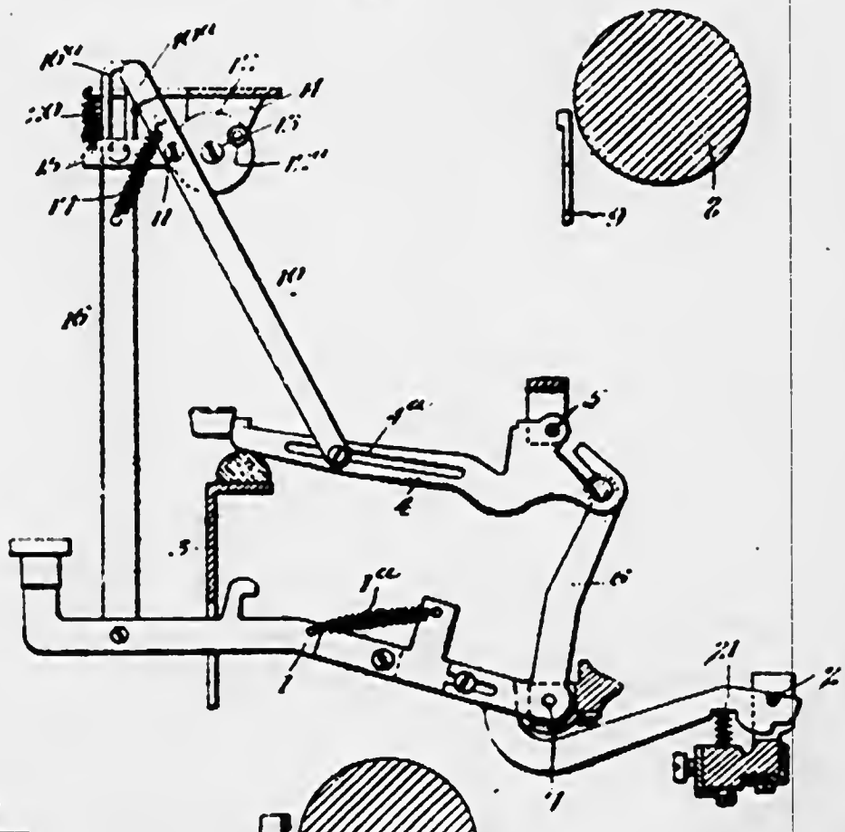

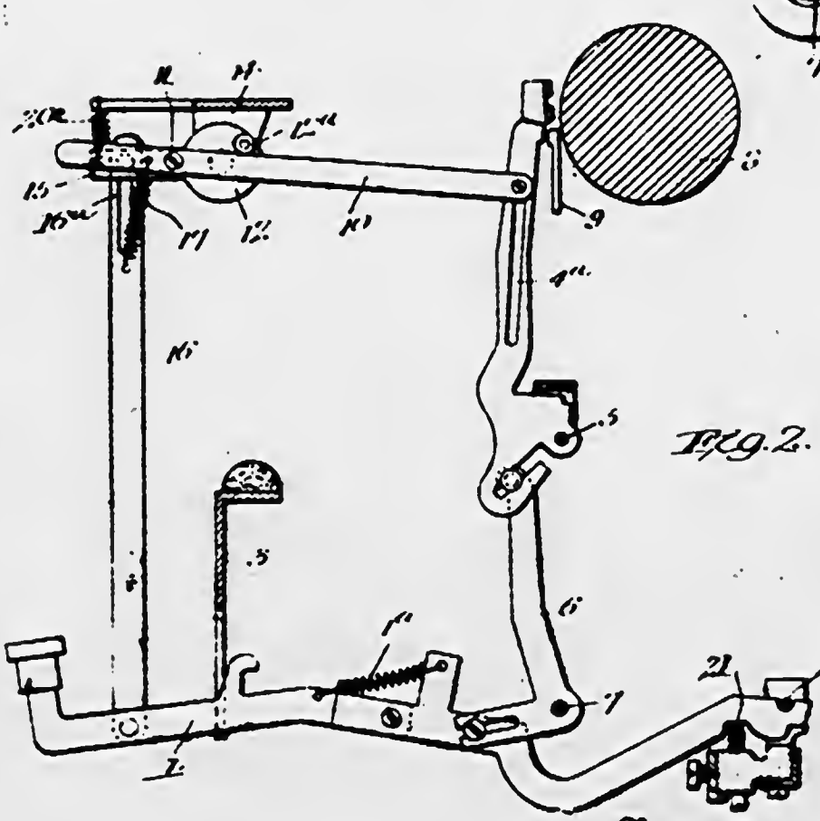

Fig. 2.

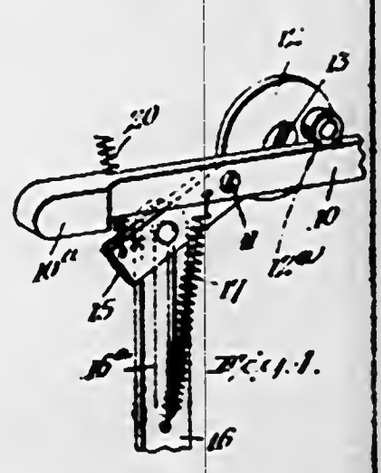

Fig. 1.

Inventor
Carl A. Joerissen.

By Cushman, Darby & Barby
Attorneys

58

197-25

57

96602

Fig. 3.

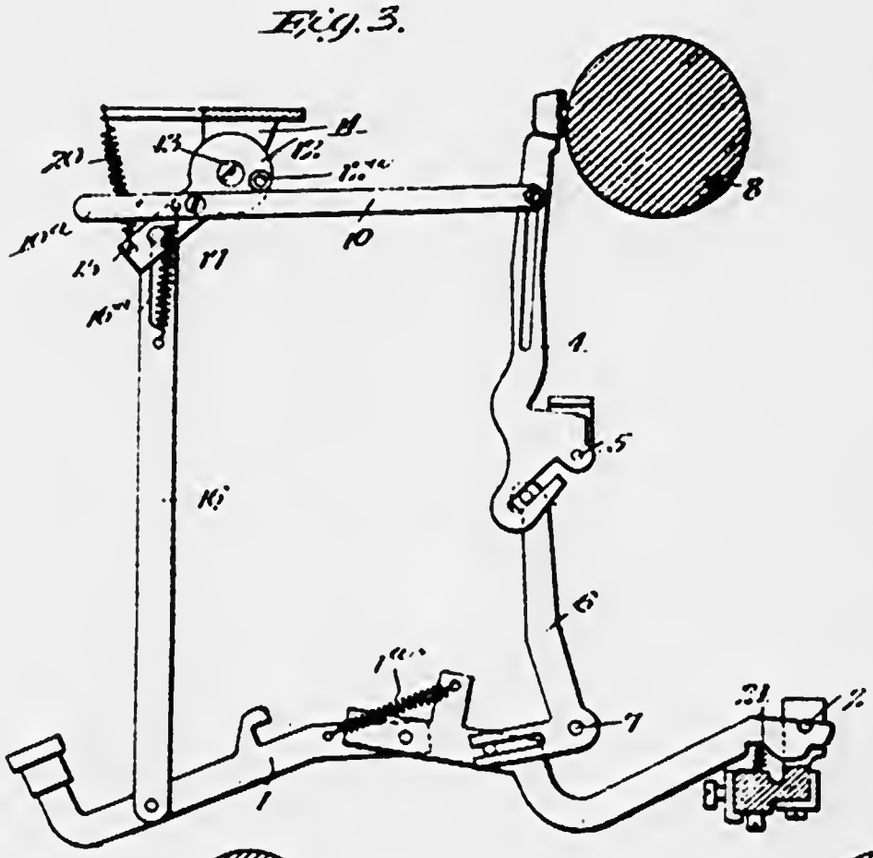

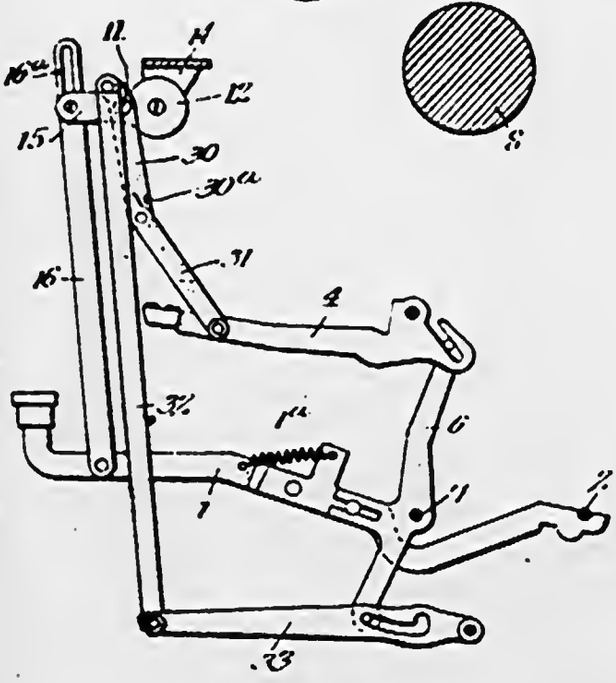

Fig. 5.

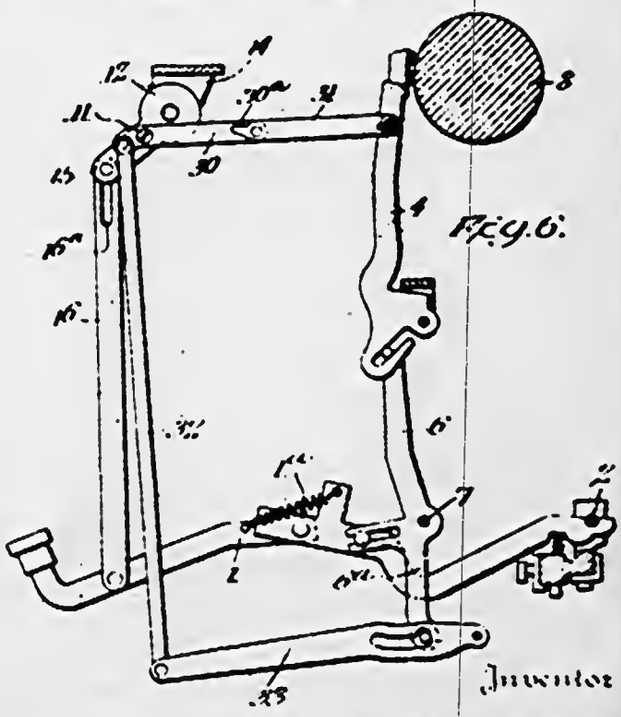

Fig. 6.

Inventor

Carl A. Joerissen.

By Cushman, Bryant & Darby

Attorneys

Serial No. 96602

3

Fig. 7.

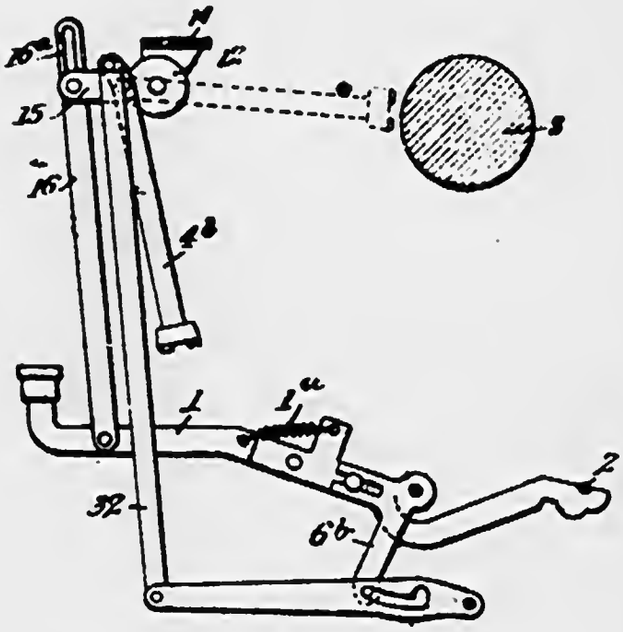

Fig. 8.

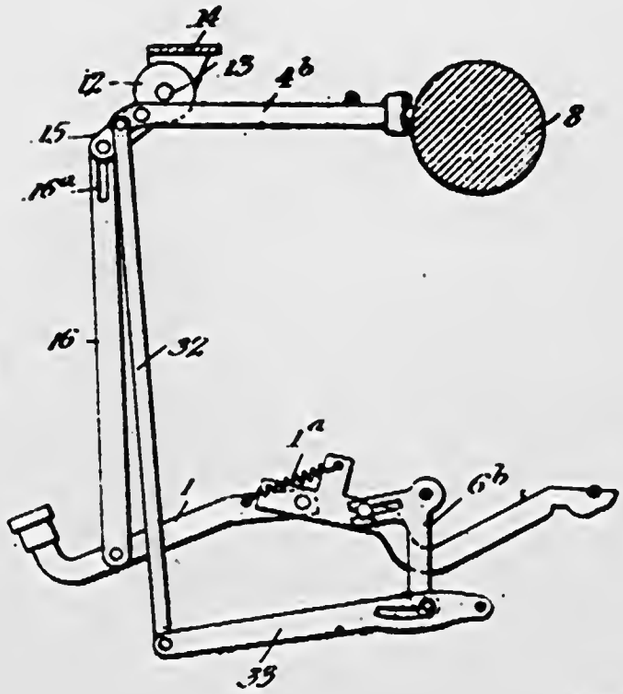

Inventor
Carl H. Joerissen

By Cushman Dugan & Darby
Attorneys

5-4

The last rejections of claims 25, 26 and 27 on references are repeated. In both of patents to Going, 1,615,694 and 1,471,153, the pressure means appears to actually function as a checking device as well as a pressure device; while in patent to Going, 1,615,835, there appears to be all of the cooperation between the checking device and the pivoted member that is defined in claim 25. The yielding or checking device in the patent to enable the pivoted member 28 to move the type bar to printing position is a cooperation between the checking device and pivoted member "in completing printing movement of the type carrier".

Claims 5 to 18, inclusive, 20 to 24, inclusive, and
290 28, 29 and 30 appear to be allowable as at present advised.

The present action is made final.

L. M. S. E. F. DOWELL
Examiner.

(Here follow photostats marked pages 291 to 298.)

299 Serial No. 96,602
Department of Commerce
United States Patent Office
Washington

ERD
Div. 58
Carl A. Joerissen July twenty-second, 1931

Your APPLICATION for a patent for an IMPROVEMENT in TYPEWRITING MACHINES
filed Mar. 22/26 has been examined and ALLOWED with 22 claims.

The final fee, TWENTY-FIVE DOLLARS, WITH $1 ADDITIONAL FOR EACH CLAIM ALLOWED IN EXCESS OF 20, must be paid not later than SIX MONTHS from the date of this present notice of allowance. If the final fee be not paid within that period, the patent will be withheld, but the application may be renewed within one year after the date of the original notice with a renewal fee of $25 and $1 additional for each claim in excess of 20.

The office delivers patents upon the day of their date, on which date their term begins to run. The preparation of the patent for final signing and sealing will require about

four weeks, and such work will not be begun until after payment of the necessary final fee.

When the final fee is paid, there should also be sent, DISTINCTLY AND PLAINLY WRITTEN, the name of the INVENTOR, TITLE OF THE INVENTION, AND SERIAL NUMBER AS ABOVE GIVEN, DATE OF ALLOWANCE (which is the date of this circular), DATE OF FILING, and, if assigned, the NAMES OF THE ASSIGNEES.

If it is desired to have the patent issue to an ASSIGNEE OR ASSIGNEES, an assignment containing a REQUEST to that effect, together with the FEE for recording the same, must be filed in this office on or before the date of payment of the final fee.

After issue of the patent, uncertified copies of the drawings and specifications may be purchased at the price of TEN CENTS EACH. The money should accompany the order. Postage stamps will not be received.

The final fee will NOT be received from other than the applicant, his assignee or attorney, or a party in interest as shown by the records of the Patent Office.

NOTICE.—WHEN THE NUMBER OF CLAIMS ALLOWED IS IN EXCESS OF 20, NO SUM LESS THAN $25 PLUS $1 ADDITIONAL FOR EACH CLAIM IN EXCESS OF TWENTY CAN BE ACCEPTED AS THE FINAL FEE.

Respectfully,

THOMAS E. ROBERTSON
Commissioner of Patents.

Cushman, Bryant, Dary & Cushman,
American Security Bldg.,
Washington, D. C.

In remitting the final fee give the serial number at the head of this notice.

Uncertified checks will not be accepted.

300 Application Div Jul 29 31 U. S. Patent Office
Issue Division Jul U. S. Patent Office

Supplemental Oath

Carl A. Joerissen
TYPEWRITING MACHINES
Filed March 22, 1926
Serial No. 96,602
Allowed July 22, 1931

DISTRICT OF COLUMBIA, *ss:*

Carl A. Joerissen, whose application for Letters Patent for Improvements in TYPEWRITING MACHINES, was filed March 22, 1926, Serial No. 96,602, and allowed July 22, 1931, being duly sworn, deposes and says that the subject matter of the allowed claims hereinafter appearing was part of his invention, was invented before he filed his original application, above identified, for such invention, was not known or used before his invention, was not patented or described in a printed publication in any country more than two years before his application, was not patented in a foreign country on an application filed by him or his legal representatives or assigns more than twelve months before his application, was not in public use or on sale in this country for more than two years before the date of his application, and has not been abandoned.

1. In a typewriting machine, the combination of a platen, a key lever, a type bar movable to and from printing relation with the platen, means controlled by actuation of the key lever for effecting initial movement of the type bar toward the platen, means for checking the movement of the type bar toward the platen including a pivotally mounted member connected to the type bar, and means for connecting the key lever and said pivotally mounted member during a portion of an operative movement of the key lever for positively moving said member to effect completion of a movement of the type bar toward the platen.

2. In a typewriting machine, the combination of a
301 platen, a depressible key lever, a pivotal type bar mounted to swing upward and rearward into printing relation with the platen, means controlled by actuation of the key lever for effecting initial movement of the type bar toward the platen, means for checking the movement of

the type bar toward the platen including a pivotally mounted member connected to and extending forward from the type bar, and means for establishing a connection between the key lever and said pivotally mounted member for positively moving said member to effect completion of a movement of the type bar toward the platen.

3. In a typewriting machine, the combination of a platen, a key lever, a type bar movable to and from printing relation with the platen, means controlled by actuation of the key lever for effecting initial movement of the type bar toward the platen, means for checking the movement of the type bar toward the platen prior to its coming into printing relation to the platen including a member pivotally supported in advance of the platen and connected to the type bar, and means connected with the key-lever for moving said member about its pivotal support after the movement of the type bar has been checked to effect completion of a movement of the type bar to printing relation with the platen.

4. In a typewriting machine, the combination of a platen, a depressible key lever, a type bar movable to and from printing relation to the platen, means controlled by depression of the key lever for effecting initial movement of the type bar toward the platen, means for checking such movement of the type bar including a member connected to said bar and extending at an angle to the length of the bar when its movement toward the platen is checked, and means including a member extending upward from the key lever for positively actuating said first mentioned member to effect completion of movement of the type bar into printing relation with the platen.

5. In a typewriting machine, the combination of a platen, a depressible key lever, a type bar movable to and from printing relation to the platen, means controlled by depression of the key lever for effecting initial movement of the type bar toward the platen, means for checking such movement of the type bar including a member connected to said bar and extending substantially at right angles to the length of the bar when its movement toward the platen is checked, and means adapted to be positively actuated by the key lever for imparting a substantially longitudinal movement to said member to effect completion of movement of the type bar into printing relation to the platen.

6. In a typewriting machine, the combination of a
302 platen, a key lever, a type bar movable to and from printing relation with the platen, means controlled by actuation of the key lever for effecting initial movement of the type bar toward the platen, means for checking the movement of the type bar toward the platen, prior to its coming into printing relation to the platen and including a pivotally mounted member connected to the type bar, and supplemental means connected with the key lever and adapted to positively rock said pivotal member during the latter portion of an operative movement of the key lever to effect completion of movement of the type bar into printing relation to the platen.

7. In a typewriting machine, the combination of a platen, a key lever, a type bar movable to and from printing relation with the platen, means controlled by actuation of the key lever for effecting initial movement of the type bar toward the platen, means for checking the movement of the type bar toward the platen including a pivotally mounted member connected to the type bar, a pivotally mounted fulcrum support for said member, and means for connecting the key lever and said fulcrum support whereby downward movement of the key after movement of the type bar has been checked will rock said fulcrum support and move said member in the direction of its length to effect completion of movement of the type bar into printing relation to the platen.

8. In a typewriting machine, the combination of a platen, a key lever, a type bar movable to and from printing relation with the platen, means controlled by actuation of the key lever for effecting initial movement of the type bar toward the platen, means for checking the movement of the type bar toward the platen including a pivotally mounted member connected to the type bar, a pivotally mounted fulcrum support for said member, and a rod extending upward from the key lever and adapted as the key is depressed beyond the position assumed when movement of the type bar toward the platen is checked to engage and positively rock the fulcrum support to move said member in the direction of its length to effect completion of movement of the type bar into printing relation to the platen.

9. In a typewriting machine, the combination of a platen, a depressible key lever, a pivoted type bar adapted to swing

upward and rearward into printing relation to the platen, a sub-lever interposed between the key-lever and type bar and adapted to effect initial movement of the type bar toward the platen as the key lever is depressed, means for checking such movement of the type bar including a member connected to the type bar and extending substantially horizontally therefrom when movement of the type bar is checked, and a rod extending upward from the key lever and adapted, as said lever is depressed beyond the position assumed when movement of the type bar is checked, to move said member in the direction of its length to effect completion of the movement of the type bar to printing relation to the platen.

10. In a typewriting machine, the combination of a
303 platen, a depressible key lever, a pivoted type bar adapted to swing upward and rearward into printing relation to the platen, a sub-lever interposed between the key-lever and type bar and adapted to effect initial movement of the type bar toward the platen as the key lever is depressed, means for checking such movement of the type bar including a pivotally mounted member connected to the type bar and projecting laterally therefrom when movement of the type bar is checked, a pivotal fulcrum support for said member, and means actuated by depressing the key lever beyond the position assumed when the movement of the type bar is checked for positively moving the fulcrum support of said member to cause the latter to effect completion of movement of the type bar into printing relation to the platen.

11. In a typewriting machine, the combination of a platen, a key lever, a type bar movable to and from printing relation with the platen, means controlled by actuation of the key lever for effecting initial movement of the type bar toward the platen, means for checking the movement of the type bar toward the platen prior to its coming into printing relation to the platen and including a pivotally mounted member connected to the type bar, and a connecting means extending upward from the key lever and adapted as the key lever is depressed beyond the position assumed when movement of the type bar is checked to engage and positively rock said pivotally mounted member to effect completion of movement of the type bar to printing relation to the platen.

12. In a typewriting machine, the combination of a platen, a key lever, a pivotally mounted type bar, means controlled by actuation of the key lever for effecting initial swinging movement of the type bar toward the platen, means connected to and moving with the type bar for checking movement of such bar toward the platen prior to its coming into printing relation to the platen, and supplemental means positively actuated by the key lever after the movement of the type bar has been checked, for effecting completion of movement of the type bar to printing relation to the platen in a substantially straight line direction.

13. In a typewriting machine, the combination of a platen, a key lever, a type bar movable to and from printing relation with the platen, means controlled by actuation of the key lever for effecting initial movement of the type bar toward the platen, means for checking the movement of the type bar toward the platen prior to its reaching printing relation to the platen including a link-like member pivotally supported in advance of the platen and having its rear end connected to the type bar, and means connected with the key-lever from moving the link relative to its pivotal support to effect completion of a movement of the type bar toward the platen.

14. In a typewriting machine, the combination of a
304 platen, a key lever, a type bar movable to and from printing relation with the platen, means controlled by actuation of the key lever for effecting initial movement of the type bar toward the platen, means for checking the movement of the type bar toward the platen, including a pivotally mounted member connected to the type bar, and supplemental means connected with the key lever and adapted to positively shift the fulcrum of said pivotal member during the latter portion of an operative movement of the key lever to move said member in the direction of its length to effect completion of movement of the type bar into printing relation to the platen.

15. In a typewriting machine, the combination of a platen, a type carrier mounted to swing upward to printing relation to the platen, means for checking movement of the type carrier toward the platen prior to the carrier coming into printing relation to the platen including a pivotally mounted member which remains stationary until said movement of the type carrier is checked and is thereafter bodily rocked

to effect completion of movement of the type carrier to printing relation to the platen, a key lever, and means actuated by operation of the key lever for effecting successively movement of the type carrier and said pivotally mounted member.

16. In a typewriting machine, the combination of a platen, a depressible key lever, a type bar movable to and from printing relation with the platen, means controlled by depression of the key lever for effecting movement of the type bar toward the platen, means for checking such movement of the type bar prior to its reaching printing relation with the platen, including a pivotally mounted member connected with the type bar, and means actuated by movement of the key lever after the movement of the type bar has been checked, for rocking said pivotally mounted member to effect completion of movement of the type bar into printing relation to the platen.

17. In a typewriting machine, the combination of a platen, a key lever, a pivotally mounted type bar movable to and from printing relation with the platen, means controlled by actuation of the key lever for effecting movement of the type bar toward the platen, means for checking such movement of the type bar prior to its reaching printing relation with the platen, including a pivotally mounted member connected with the type bar, and supplemental means, actuated by the key lever after the movement of the type bar has been checked, for rocking said pivotal member and effecting completion of the movement of the type bar towards the platen.

18. In a typewriting machine, the combination of a
305 platen, a key lever, a type bar movable to and from printing relation with the platen, means actuated druing the first portion of an operative movement of the key lever for effecting movement of the type bar toward the platen, means for checking movement of the type bar toward the platen prior to the bar coming into printing relation to the platen, and including a member connected to the type bar and pivotally supported in advance of the platen, and supplemental means, actuated by the key lever after the movement of the type bar has been checked, for rocking said pivotally mounted member to effect completion of the movement of the type bar toward the platen.

19. In a typewriting machine, the combination of a platen,

a depressible key lever, a pivoted type bar, means controlled by depression of the key lever for effecting movement of the type bar toward the platen, means movable with the type bar for checking such pivotal movement of the type bar prior to the bar coming into printing relation to the platen, and supplemental means providing a positive connection between the key lever and type bar, after such movement of the type bar has been checked, and effecting completion of the movement of the type bar toward the platen.

20. In a typewriting machine, the combination of a platen, a type carrier movable to and from printing relation with the platen, and means for moving the type carrier into printing relation to the platen including a normally collapsed toggle, the straightening of which acts to check movement of the type carrier prior to the latters contacting with the platen and means for moving the toggle substantially in the direction of its length to complete the printing movement of the type carrier.

21. In a typewriting machine, the combination of a platen, a type carrier movable to and from printing relation with the platen, and means for moving the type carrier into printing relation to the platen including a normally collapsed toggle, the straightening of which acts to check movement of the type carrier prior to the latters contacting with the platen, and a rocking member connected with and adapted to supplement the action of the toggle to complete printing movement of the type carrier.

22. In a typewriting machine, the combination of a platen, a type carrier movable to and from printing relation with the platen, and means for moving the type carrier into printing relation to the platen including a normally collapsed toggle, one member of which is adapted to move the type carrier as the toggle is expanded, a pivotally mounted support for the other toggle member, and means whereby the support is rocked to supplement the action of the toggle in completing printing movement of the type carrier.

306 CARL A. JOERISSEN

Subscribed and sworn to before me this 28th day of July 1931.

GEORGE D. O'BRIEN
(Seal) *Notary Public*
County of Greenbrier
State of West Virginia

307 Application Div. Jan 19 1932 U. S. Patent Office.

Urgent

Applicant: C. A. Joerissen,
Invention: TYPEWRITING MACHINES,
Filed: March 22, 1928,
Ser. No. 96,602

Hon. Commissioner of Patents,

Sir:

We hereby substitute as attorneys in the above named case, Messrs. Cushman, Bryant, Darby & Cushman, a firm composed of Arlon V. Cushman, Arthur L. Bryant, John J. Darby and William M. Cushman (Reg. No. 7196), American Security Building, Washington, D. C.

Respectfully,

CUSHMAN BRYANT & DARBY

January 19, 1932

(Here follow photostats marked pages 308, 309, 310 and 311.)

312 *Remarks*

Claims 31 to 34 above added, correspond essentially to claims 26, 28, 30 and 31 of applicant's copending application, Serial No. 167,734, filed Feb. 12, 1927, the claims having been considered allowable, as the attorneys have been informally told, in the latter application.

Each of the above claims has been amended slightly in order to emphasize the poised position of the link portion which moves downwardly from its normal position of rest and rearwardly to complete the stroke of the type bar.

For example, claim 26 of application, Serial No. 167,734, contain the clause "said link portion having a downwardly and rearward operative swing". The following clause has been substituted "said link portion being swingable downwardly from its normal position of rest and rearwardly". It will be evident that the patentable merit of the claim has not been affected by the substitution. Each of claims 32, 33 and 34 has been similarly amended.

Claim 35 is the same as claim 32, with the exception of a limitation which has been added in the following words

APPLICATION JAN 15 1932 U.S. PATENT OFFICE

U. S. PATENT OFFICE
JAN 19 1932
ISSUE DIVISION

IN THE UNITED STATES PATENT OFFICE

C. A. Joerissen,
TYPEWRITING MACHINES,
Filed March 22, 1928,
Serial No. 96,602.

January 19, 1932.

Hon. Commissioner of Patents,
Washington, D. C.

Sir:-

Without withdrawing the case from issue, kindly amend the above application as follows:

IN THE SPECIFICATION

Page 9.

Line 23, after the period add the following: The final operative swing of the fulcrum support is permitted by the pin of the pin and slot connection between members 6^a and 33 coming under the upward enlargement at the right end of the slot (Fig. 6).

That part of the fulcrum support between its swinging axis and the screw 11 constitutes a link portion swingable downwardly from its normal position of rest and rearwardly to complete the stroke of the type bar. The fulcrum support being thus normally poised, its inertia is overcome with the least possible effort. Spring 1^a in straightening the key bar moves link 16 upwardly to restore the fulcrum support, the usual key bar return spring assisting in this action.

IN THE CLAIMS

Add the following claims:

#23 ~~31~~. In a typewriter, a type bar pivoted for an upward and rearward operative swing, a toggle comprising two pivotally connected members of which one has a pivotal connection with the type bar, a swingable link portion having a pivotal connection with the other of said toggle members, said link portion being swingable downwardly from its normal position of rest and rearwardly, a key bar operable to move the toggle members from a normally collapsed downwardly extending position to a relatively straightened position and to impart to the type bar a terminally checked throw to a position slightly in advance of striking position, and means thereupon effective to operatively swing said link portion to complete the stroke of the type bar through said toggle.

#W 32. In a typewriter, a type bar pivoted for an upward and rearward operative stroke, a toggle comprising two pivotally connected members of which one has a pivotal connection with the type bar, a swingable link portion having a pivotal connection with the other of said toggle members, said link portion being swingable downwardly from its normal position of rest and rearwardly, a key bar having a connection with said toggle and operable to move the toggle members from a normally collapsed downwardly extending position to a relatively straightened position to impart to the type bar a terminally checked throw to a position slightly in advance of striking position, and means external of said connection thereupon effective to swing said link portion to complete the stroke of the type bar through said toggle.

#25 ~~33~~. In a typewriter, a type bar pivoted for an upward and rearward operative swing, a toggle comprising two pivotally connected members of which one has a pivotal connection with the type bar, a swingable link portion having a pivotal connection with the other of said toggle members, said link portion being swingable downwardly from its normal position of rest and rearwardly, a key bar operable to move the toggle members from a normally collapsed downwardly extending position to a relatively straightened position and to impart to the type bar a terminally checked throw to a position slightly in advance of striking position, means thereupon effective to operatively swing said link portion to complete the stroke of the type bar through said toggle, and power-storing means tending to restore said link portion.

~~34~~. In a typewriter, a type bar pivoted for an upward and rearward operative stroke, a toggle comprising two pivotally connected members of which one has a pivotal connection with the type bar, a swingable link portion having a pivotal connection with the other of said toggle members, said link portion being swingable downwardly from its normal position of rest and rearwardly, a key bar having a connection with said toggle and operable to move the toggle members from a normally collapsed downwardly extending position to a relatively straightened position to impart to the type bar a terminally checked throw to a position slightly in advance of striking position, means external of said connection thereupon effective to swing said link portion to complete the stroke of the type bar through said toggle, and power-storing means tending to restore said link portion.

32+ 27 ~~35~~. In a typewriter, a type bar pivoted for an upward and rearward operative stroke, a toggle comprising two pivotally connected members of which one has a pivotal connection with the type bar, a swingable link portion having a pivotal connection with the other of said toggle members, said link portion being swingable downwardly from its normal position of rest and rearwardly, a key bar having a connection with said toggle and operable to move the toggle members from a normally collapsed downwardly extending position to a relatively straightened position to impart to the type bar a terminally checked throw to a position slightly in advance of striking position, said connection including means acting on the type bar exclusively of the toggle during said terminally checked throw, and means external of said connection thereupon effective to swing said link portion to complete the stroke of the type bar through said toggle.

34+ 28 ~~36~~. In a typewriter, a type bar pivoted for an upward and rearward operative stroke, a toggle comprising two pivotally connected members of which one has a pivotal connection with the type bar, a swingable link portion having a pivotal connection with the other of said toggle members, said link portion being swingable downwardly from its normal position of rest and rearwardly, a key bar having a connection with said toggle and operable to move the toggle members from a normally collapsed downwardly extending position to a relatively straightened position to impart to the type bar a terminally checked throw to a position slightly in advance of striking position, said connection including means acting on the type bar exclusively of the toggle during said terminally checked throw, means external of said connection thereupon effective to swing said link portion to complete the stroke of the type bar through said toggle, and power-storing means tending to restore said link portion.

U.S. PATENT OFFICE APPLICATION DIV. JAN 22 1932

U.S. PATENT OFFICE JAN 22 1932 DIVISION 58

IN THE UNITED STATES PATENT OFFICE

C. A. Joerissen,
TYPEWRITING MACHINES,
Filed March 22, 1928,
Serial No. 96,602.

* * *

January 22, 1932

Hon. Commissioner of Patents,
Washington, D. C.

Sir:

In response to the Official Action on the amendment of January 19th, in the above application, and without removing the case from issue, kindly amend as follows:

IN THE CLAIMS:

Enter n

Claim 35.

Line 11, after "connection" insert --including means--.

Line 12, before the comma, insert --during said terminally checked throw--.

Claim 36.

Line 12, before "acting" insert --including means--.

Same line, before the comma insert --during said terminally checked throw--.

R E M A R K S

While there is a certain action on the toggle 30,31 through links 32 and 33 upon depression of the key bar, a straightening action is also exerted on the toggle through elements 6 and 4. Consequently, in amending claims 35 and 36 next to last and third clause from end respectively to state

96602 75

"said connection including means acting on the type bar exclusively of the toggle during said terminally checked throw", any inaccuracy is overcome.

This amendment was discussed at an interview kindly granted by the Principal Examiner and was believed to place the claims in allowable condition.

In view of this fact the final fee is being paid concurrently with the filing of this amendment, in the assumption that the case will issue with twenty-eight claims.

Respectfully,

Cushman Bryant Darby & Cushman
Attorneys for Applicant.

GFF:MW

ENTRY RECOMMENDED.
UNDER RULE 78.

E. F. Dowell
EXAMINER.

ENTRY APPROVED

M J Moore
ACTING COMMISSIONER OF PATENTS

315

96802

76

"said connection acting on the type bar exclusively of the toggle". The arm 6, Figs. 5 and 6, Serial No. 96,602, acts on the type bar exclusively of the toggle 30, 31 to relatively straighten the arms thereof.

Claim 36 differs from 34 as 35 from 32.

Inasmuch as claims 35 and 36 are more limited than the claims taken from Serial No. 167,734, there should be no objection to their entry.

The specification has been amended slightly in order to provide a clear basis for the language of the claims.

Immediate action is requested on this amendment, inasmuch as the final fee becomes due on the 22nd of
313 this month and it is applicant's intention to pay it at that time.

Upon entry of this amendment, the transferred claims will be cancelled from Serial No. 167,734.

Respectfully,

CUSHMAN BRYANT DARBY & CUSHMAN
Attorneys.

Entry Recommended.
Under Rule 78.
E. F. DOWELL
Examiner.
GFF:U

(Here follow photostats marked pages 314 and 315.)

316 Div. 58 Room 5613 Paper No. 19

Department of Commerce
United States Patent Office
LMS:ERD Washington

January 23, 1932

Applicant: Carl A. Joerissen
Ser. No. 96,602
Filed Mar. 22, 1926
For TYPEWRITING MACHINES

Cushman, Bryant, Darby & Cushman,
American Security Bldg.,
Washington, D. C.

The amendment proposed has been entered under Rule 78.

THOMAS E. ROBERTSON
Commissioner of Patents.

317 Paper 20

Application Div. Jan 28 1932 U. S. Patent Office.

U. S. Patent Office Feb 1 - 1932 Issue Division

Supplemental Oath

Pat. 1846339

Feb. 23

Carl A. Joerissen
TYPEWRITING MACHINES
Filed March 22, 1926
Serial No. 96,602
Allowed July 22, 1931

DISTRICT OF COLUMBIA, *ss:*

Carl A. Joerissen, whose application for Letters Patent for Improvements in TYPEWRITING MACHINES, was filed March 22, 1926, Serial No. 96,602, and allowed July 22, 1931, being duly sworn, deposes and says that the subject matter of the allowed claims hereinafter appearing was part of his invention, was invented before he filed his original application, above identified, for such invention, was not known or used before his invention, was not patented or described in a printed publication in any country more than two years before his application, was not patented in a foreign country on an application filed by him or his legal representatives or assigns more than twelve months before his application, was not in public use or on sale in this country for more than two years before the date of his application, and has not been abandoned.

1. In a typewriting machine, the combination of a platen, a key lever, a type bar movable to and from printing relation with the platen, means controlled by actuation of the key lever for effecting initial movement of the type bar toward the platen, means for checking the movement of the type bar toward the platen including a pivotally mounted member connected to the type bar, and means for connecting the key lever and said pivotally mounted member during a portion of an operative movement of the key lever for positively moving said member to effect completion of a movement of the type bar toward the platen.

2. In a typewriting machine, the combination of a
318 platen, a depressible key lever, a pivotal type bar mounted to swing upward and rearward into printing relation with the platen, means controlled by actuation of the key lever for effecting initial movement of the type bar toward the platen, means for checking the movement of the type bar toward the platen including a pivotally mounted member connected to and extending forward from the type bar, and means for establishing a connection between the key lever and said pivotally mounted member for positively moving said member to effect completion of a movement of the type bar toward the platen.

3. In a typewriting machine, the combination of a platen, a key lever, a type bar movable to and from printing relation with the platen, means controlled by actuation of the key lever for effecting initial movement of the type bar toward the platen, means for checking the movement of the type bar toward the platen prior to its coming into printing relation to the platen including a member pivotally supported in advance of the platen and connected to the type bar, and means connected with the key-lever for moving said member about its pivotal support after the movement of the type bar has been checked to effect completion of a movement of the type bar to printing relation with the platen.

4. In a typewriting machine, the combination of a platen, a depressible key lever, a type bar movable to and from printing relation to the platen, means controlled by depression of the key lever for effecting initial movement of the type bar toward the platen, means for checking such movement of the type bar including a member connected to said bar and extending at an angle to the length of the bar when its movement toward the platen is checked, and means including a member extending upward from the key lever for positively actuating said first mentioned member to effect completion of movement of the type bar into printing relation with the platen.

5. In a typewriting machine, the combination of a platen, a depressible key lever, a type bar movable to and from printing relation to the platen, means controlled by depression of the key lever for effecting initial movement of the type bar toward the platen, means for checking such movement of the type bar including a member connected to said

bar and extending substantially at right angles to the length of the bar when its movement toward the platen is checked, and means adapted to be positively actuated by the key lever for imparting a substantially longitudinal movement to said member to effect completion of movement of the type bar into printing relation to the platen.

6. In a typewriting machine, the combination of a
319 platen, a key lever, a type bar movable to and from printing relation with the platen, means controlled by actuation of the key lever for effecting initial movement of the type bar toward the platen, means for checking the movement of the type bar toward the platen, prior to its coming into printing relation to the platen and including a pivotally mounted member connected to the type bar, and supplemental means connected with the key lever and adapted to positively rock said pivotal member during the latter portion of an operative movement of the key lever to effect completion of movement of the type bar into printing relation to the platen.

7. In a typewriting machine, the combination of a platen, a key lever, a type bar movable to and from printing relation with the platen, means controlled by actuation of the key lever for effecting initial movement of the type bar toward the platen, means for checking the movement of the type bar toward the platen including a pivotally mounted member connected to the type bar, a pivotally mounted fulcrum support for said member, and means for connecting the key lever and said fulcrum support whereby downward movement of the key after movement of the type bar has been checked will rock said fulcrum support and move said member in the direction of its length to effect completion of movement of the type bar into printing relation to the platen.

8. In a typewriting machine, the combination of a platen, a key lever, a type bar movable to and from printing relation with the platen, means controlled by actuation of the key lever for effecting initial movement of the type bar toward the platen, means for checking the movement of the type bar toward the platen including a pivotally mounted member connected to the type bar, a pivotally mounted fulcrum support for said member, and a rod extending upward from the key lever and adapted as the key is depressed beyond the position assumed when movement of the type bar

toward the platen is checked to engage and positively rock the fulcrum support to move said member in the direction of its length to effect completion of movement of the type bar into printing relation to the platen.

9. In a typewriting machine, the combination of a platen, a depressible key lever, a pivoted type bar adapted to swing upward and rearward into printing relation to the platen, a sub-lever interposed between the key-lever and type bar and adapted to effect initial movement of the type bar toward the platen as the key lever is depressed, means for checking such movement of the type bar including a member connected to the type bar and extending substantially horizontally therefrom when movement of the type bar is checked, and a rod extending upward from the key lever and adapted, as said lever is depressed beyond the position assumed when movement of the type bar is checked, to move said member in the direction of its length to effect completion of the movement of the type bar to printing relation to the platen.

10. In a typewriting machine, the combination of a
320 platen, a depressible key lever, a pivoted type bar adapted to swing upward and rearward into printing relation to the platen, a sub-lever interposed between the key-lever and type bar and adapted to effect initial movement of the type bar toward the platen as the key lever is depressed, means for checking such movement of the type bar including a pivotally mounted member connected to the type bar and projecting laterally therefrom when movement of the type bar is checked, a pivotal fulcrum support for said member, and means actuated by depressing the key lever beyond the position assumed when the movement of the type bar is checked for positively moving the fulcrum support of said member to cause the latter to effect completion of movement of the type bar into printing relation to the platen.

11. In a typewriting machine, the combination of a platen, a key lever, a type bar movable to and from printing relation with the platen, means controlled by actuation of the key lever for effecting initial movement of the type bar toward the platen, means for checking the movement of the type bar toward the platen prior to its coming into printing relation to the platen and including a pivotally mounted member connected to the type bar, and a connecting means

extending upward from the key lever and adapted as the key lever is depressed beyond the position assumed when movement of the type bar is checked to engage and positively rock said pivotally mounted member to effect completion of movement of the type bar to printing relation to the platen.

12. In a typewriting machine, the combination of a platen, a key lever, a pivotally mounted type bar, means controlled by actuation of the key lever for effecting initial swinging movement of the type bar toward the platen, means connected to and moving with the type bar for checking movement of such bar toward the platen prior to its coming into printing relation to the platen, and supplemental means positively actuated by the key lever after the movement of the type bar has been checked, for effecting completion of movement of the type bar to printing relation to the platen in a substantially straight line direction.

13. In a typewriting machine, the combination of a platen, a key lever, a type bar movable to and from printing relation with the platen, means controlled by actuation of the key lever for effecting initial movement of the type bar toward the platen, means for checking the movement of the type bar toward the platen prior to its reaching printing relation to the platen including a link-like member pivotally supported in advance of the platen and having its rear end connected to the type bar, and means connected with the key-lever for moving the link relative to its pivotal support to effect completion of a movement of the type bar toward the platen.

14. In a typewriting machine, the combination of
321 a platen, a key lever, a type bar movable to and from printing relation with the platen, means controlled by actuation of the key lever for effecting initial movement of the type bar toward the platen, means for checking the movement of the type bar toward the platen including a pivotally mounted member connected to the type bar, and supplemental means connected with the key lever and adapted to positively shift the fulcrum of said pivotal member during the latter portion of an operative movement of the key lever to move said member in the direction of its length to effect completion of movement of the type bar into printing relation to the platen.

15. In a typewriting machine, the combination of a platen, a type carrier mounted to swing upward to printing relation to the platen, means for checking movement of the type carrier toward the platen prior to the carrier coming into printing relation to the platen including a pivotally mounted member which remains stationary until said movement of the type carrier is checked and is thereafter bodily rocked to effect completion of movement of the type carrier to printing relation to the platen, a key lever, and means actuated by operation of the key lever for effecting successively movement of the type carrier and said pivotally mounted member.

16. In a typewriting machine, the combination of a platen, a depressible key lever, a type bar movable to and from printing relation with the platen, means controlled by depression of the key lever for effecting movement of the type bar toward the platen, means for checking such movement of the type bar prior to its reaching printing relation with the platen, including a pivotally mounted member connected with the type bar, and means actuated by movement of the key lever after the movement of the type bar has been checked, for rocking said pivotally mounted member to effect completion of movement of the type bar into printing relation to the platen.

17. In a typewriting machine, the combination of a platen, a key lever, a pivotally mounted type bar movable to and from printing relation with the platen, means controlled by actuation of the key lever for effecting movement of the type bar toward the platen, means for checking such movement of the type bar prior to its reaching printing relation with the platen, including a pivotally mounted member connected with the type bar, and supplemental means, actuated by the key lever after the movement of the type bar has been checked, for rocking said pivotal member and effecting completion of the movement of the type bar towards the platen.

18. In a typewriting machine, the combination of a
322 platen, a key lever, a type bar movable to and from printing relation with the platen, means actuated druing the first portion of an operative movement of the key lever for effecting movement of the type bar toward the platen, means for checking movement of the type bar

toward the platen prior to the bar coming into printing relation to the platen, and including a member connected to the type bar and pivotally supported in advance of the platen, and supplemental means, actuated by the key lever after the movement of the type bar has been checked, for rocking said pivotally mounted member to effect completion of the movement of the type bar toward the platen.

19. In a typewriting machine, the combination of a platen, a depressible key lever, a pivoted type bar, means controlled by depression of the key lever for effecting movement of the type bar toward the platen, means movable with the type bar for checking such pivotal movement of the type bar prior to the bar coming into printing relation to the platen, and supplemental means providing a positive connection between the key lever and type bar, after such movement of the type bar has been checked, and effecting completion of the movement of the type bar toward the platen.

20. In a typewriting machine, the combination of a platen, a type carrier movable to and from printing relation with the platen, and means for moving the type carrier into printing relation to the platen including a normally collapsed toggle, the straightening of which acts to check movement of the type carrier prior to the latters contacting with the platen, and means for moving the toggle substantially in the direction of its length to complete the printing movement of the type carrier.

21. In a typewriting machine, the combination of a platen, a type carrier movable to and from printing relation with the platen, and means for moving the type carrier into printing relation to the platen including a normally collapsed toggle, the straightening of which acts to check movement of the type carrier prior to to the latters contacting with the platen, and a rocking member connected with and adapted to supplement the action of the toggle to complete printing movement of the type carrier.

22. In a typewriting machine, the combination of a platen, a type carrier movable to and from printing relation with the platen, and means for moving the type carrier into printing relation to the platen including a normally collapsed toggle, one member of which is adapted to move the type carrier as the toggle is expanded, a pivotally mounted support for the other toggle member, and means whereby

the support is rocked to supplement the action of the toggle in completing printing movement of the type carrier.

323 CARL A. JOERISSEN.

Subscribed and sworn to before me this 28th day of January, 1931.

THERESA BUCKHANTZ,
(Seal) *Notary Public, D. C.*

Application Div. Jan 28 1932 U. S. Patent Office Paper 21

324 *Supplemental Oath*

U. S. Patent Office
Feb 1 1932

Issue Division

Pat. 1846339 Feb. 23

C. A. Joerissen,
Typewriting Machines,
Filed March 22, 1928,
Serial No. 96,602,
Allowed July 22, 1931.

DISTRICT OF COLUMBIA, *ss:*

C. A. Joerissen, whose application for Letters Patent for Improvements in Typewriting Machines, was filed March 22, 1928, Serial No. 96,602, and allowed July 22, 1931, being duly sworn, deposes and says that the subject matter of the allowed claims hereinafter appearing was part of his invention, was invented before he filed his original application, above identified, for such invention, was not known or used before his invention, was not patented or described in a printed publication in any country more than two years before his application, was not patented in a foreign country on an application filed by him or his legal representatives or assigns more than twelve months before his application, was not in public use or on sale in this country for more than two years before the date of his application, and has not been abandoned.

23. In a typewriter, a type bar pivoted for an upward and rearward operative swing, a toggle comprising two pivotally

connected members of which one has a pivotal connection with the type bar, a swingable link portion having a pivotal connection with the other of said toggle members, said link portion being swingable downwardly from its normal position of rest and rearwardly, a key bar operable to move the toggle members from a normally collapsed downwardly extending position to a relatively straightened position and to impart to the type bar a terminally checked throw to a position slightly in advance of striking position, and means thereupon effective to operatively swing said link portion to complete the stroke of the type bar through said toggle.

24. In a typewriter, a type bar pivoted for an up-
325 ward and rearward operative stroke, a toggle comprising two pivotally connected members of which one has a pivotal connection with the type bar, a swingable link portion having a pivotal connection with the other of said toggle members, said link portion being swingable downwardly from its normal position of rest and rearwardly, a key bar having a connection with said toggle and operable to move the toggle members from a normally collapsed downwardly extending position to a relatively straightened position to impart to the type bar a terminally checked throw to a position slightly in advance of striking position, and means external of said connection thereupon effective to swing said link portion to complete the stroke of the type bar through said toggle.

25. In a typewriter, a type bar pivoted for an upward and rearward operative swing, a toggle comprising two pivotally connected members of which one has a pivotal connection with the type bar, a swingable link portion having a pivotal connection with the other of said toggle members, said link portion being swingable downwardly from its normal position of rest and rearwardly, a key bar operable to move the toggle members from a normally collapsed downwardly extending position to a relatively straightened position and to impart to the type bar a terminally checked throw to a position slightly in advance of striking position, means thereupon effective to operatively swing said link portion to complete the stroke of the type bar through said toggle, and power-storing means tending to restore said link portion.

26. In a typewriter, a type bar pivoted for an upward and rearward operative stroke, a toggle comprising two pivotally connected members of which one has a pivotal connection with the type bar, a swingable link portion having a pivotal connection with the other of said toggle members, said link portion being swingable downwardly from its normal position of rest and rearwardly, a key bar having a connection with said toggle and operable to move the toggle members from a normally collapsed downwardly extending position to a relatively straightened position to impart to the type bar a terminally checked throw to a position slightly in advance of striking position, means external of said connection thereupon effective to swing said link portion to complete the stroke of the type bar through said toggle, and power-storing means tending to restore said link portion.

27. In a typewriter, a type bar pivoted for an upward and rearward operative stroke, a toggle comprising two pivotally connected members of which one has a pivotal connection with the type bar, a swingable link portion having a pivotal connection with the other of said toggle members, said link portion being swingable downwardly from its normal position of rest and rearwardly, a key bar having a connection with said toggle and operable to move the toggle members from a normally collapsed downwardly ex-
326 tending position to a relatively straightened position to impart to the type bar a terminally checked throw to a position slightly in advance of striking position, said connection including means acting on the type bar exclusively of the toggle during said terminally checked throw, and means external of said connection thereupon effective to swing said link portion to complete the stroke of the type bar through said toggle.

28. In a typewriter, a type bar pivoted for an upward and rearward operative stroke, a toggle comprising two pivotally connected members of which one has a pivotal connection with the type bar, a swingable link portion having a pivotal connection with the other of said toggle members, said link portion being swingable downwardly from its normal position of rest and rearwardly, a key bar having a connection with said toggle and operable to move the toggle members from a normally collapsed downwardly ex-

tending position to a relatively straightened position to impart to the type bar a terminally checked throw to a position slightly in advance of striking position, said connection including means acting on the type bar exclusively of the toggle during said terminally checked throw, means external of said connection thereupon effective to swing said link portion to complete the stroke of the type bar through said toggle, and power-storing means tending to restore said link portion.

CARL A. JOERISSEN

Subscribed and sworn to before me, a Notary Public, this 28th day of January, 1932.

THERESA BUCKHANTZ,
(Seal) *Notary Public, D. C.*

(Here follow photostats marked pages 327 to 332 and 343 to 346)

348 Supreme Court of District of Columbia

Equity No. 56,895

JOERISSEN

v.

REMINGTON RAND, INC.

Plaintiff's Exhibit 5.

349 390

Department of Commerce

United States Patent Office

To all persons to whom these present shall come, Greeting:

This is to certify that the annexed is a true copy from the records of this office of the File Wrapper, Contents and all Drawings, in the matter of the Letters Patent of Carl A. Joerissen, Number 1,856,340, Granted May 3, 1932, for Improvement in Typewriting Machines.

In Testimony Whereof I have hereunto set my hand and caused the seal of the Patent Office to be affixed, at the City

ARLON V. CUSHMAN
ARTHUR L. BRYANT
JOHN J. DARBY
WILLIAM M. CUSHMAN

CARROLL J. McGUIRE
MAX C. LOUIS
CORNHAM F. FREER
JAMES W. DENT
C. WILLARD HAYES
ROBERT U. GEIB, JR.
HARRY C. RILEY
KERN E. FOLKERS
GEORGE W. PORTER
JOHN W. HALLEY

CUSHMAN, BRYANT, DARBY & CUSHMAN
ATTORNEYS AT LAW AND COUNSELORS IN PATENT CAUSES
AMERICAN SECURITY BUILDING
WASHINGTON, D. C.

PATENTS
TRADE-MARKS & COPYRIGHTS

CABLE
"MYCUSHMAN" WASHINGTON

TELEPHONES
NATIONAL 3460-3461-3462

JAN 22 1932

January
Twenty-two
1932

U. S. PAT. OFF.
JAN 27 1932
ISSUE DIVISION

Hon. Commissioner of Patents,
Washington, D. C.

Subject: Appln. Carl A. Joerissen
Serial No. 96,602

6339

Sir:

Herewith check for $33.00 to cover the final Government fee in the above application.

An amendment under Rule 78 is being filed concurrently with the payment of the final Government fee in this case.

Respectfully,
Cushman Bryant Darby Cushman

AVC/G

Enc.

94002

88

JAN 2004
JAN 22 1932

JAN-22-32 416430 H - Check — 25.00
JAN-22-32 416430 H - Check — 8.00

U. S. Patent
U. S. Patent

FINAL FEE PAID TO THE COMMISSIONER OF PATENTS

(Be careful to give correct Serial No.)

Serial No. 96,602

INVENTOR:

Carl A. Joerissen

PATENT TO BE ISSUED TO

As per record

NAME OF INVENTION, AS ALLOWED:

Typewriting machines

DATE OF PAYMENT:

January 22, 1932

FEE:

$20, Final 28 cls.

DATE OF FILING:

March 22, 1926

DATE OF CIRCULAR OF ALLOWANCE:

July 22, 1931

The Commissioner of Patents will please apply the accompanying fee as indicated above.

Cushman, Bryant, Darby & Cushman
Attorney.

SEND PATENT TO

Attorneys

Final fees will not be received from other than the applicant, his assignee or attorney, or a party in interest as shown by the records of the Patent Office.

11—8978

Paper no. 22

22-76

Patent No. 1,846,339

Inventor Carl A. Joerissen

An application for reissue of this patent was filed on December 15, 1933

Reissue Patent Issued on Feb. 13, 1934

As Reissue No. 19,076

Do not move this from the file.

Feb. 23, 1932. C. A. SOERISSEN 1,846,339

TYPEWRITING MACHINE

Filed March 22, 1926 3 Sheets-Sheet 1

Fig. 1.

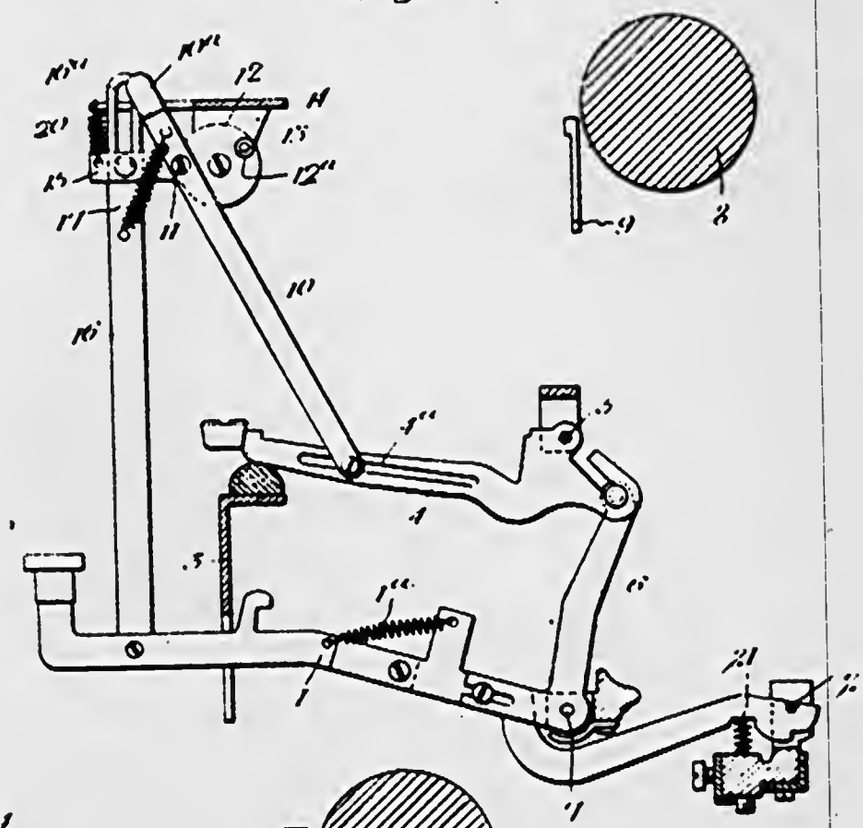

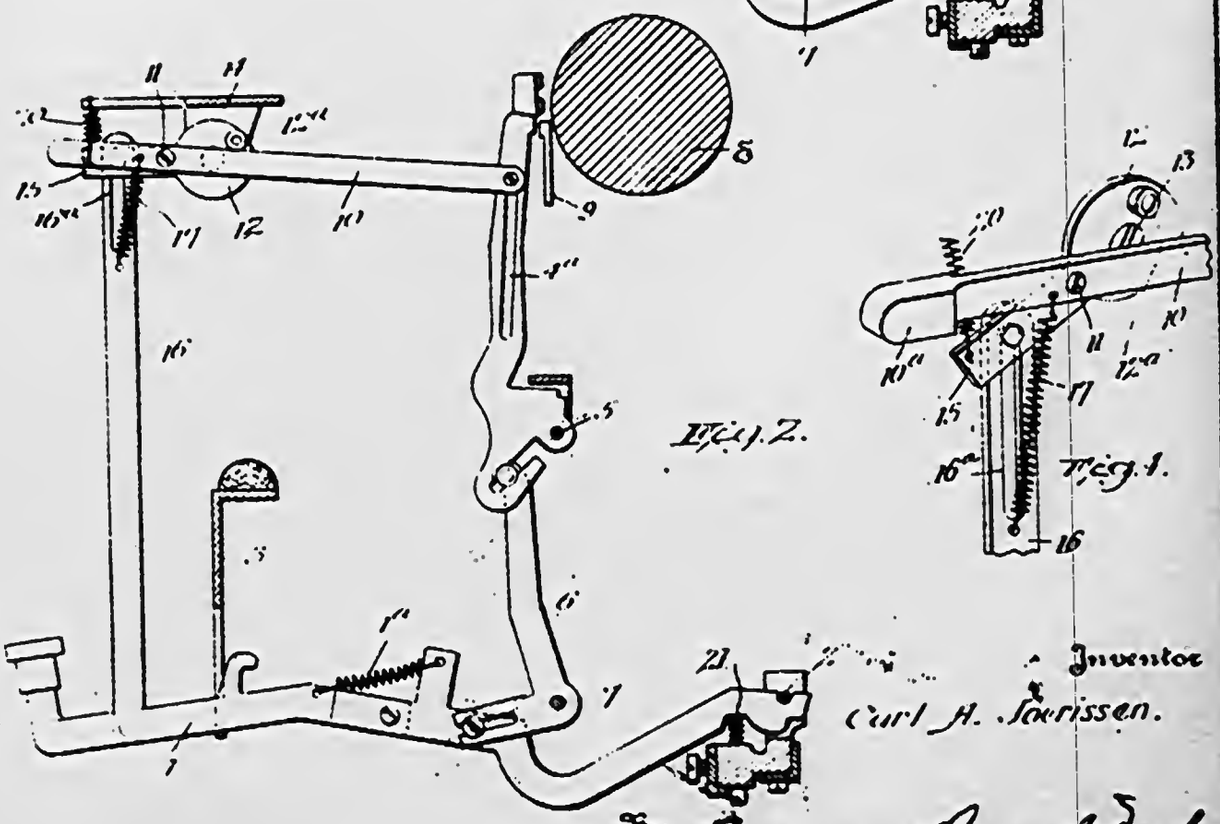

Fig. 2.

Fig. 4.

Inventor
Carl A. Soerissen.

By Coulman, Bryant & Darby
Attorneys

66632

Feb. 23, 1932. C. A. JOERISSEN 1,846,339

TYPEWRITING MACHINE

Filed March 22, 1926 3 Sheets-Sheet 2

Fig. 3.

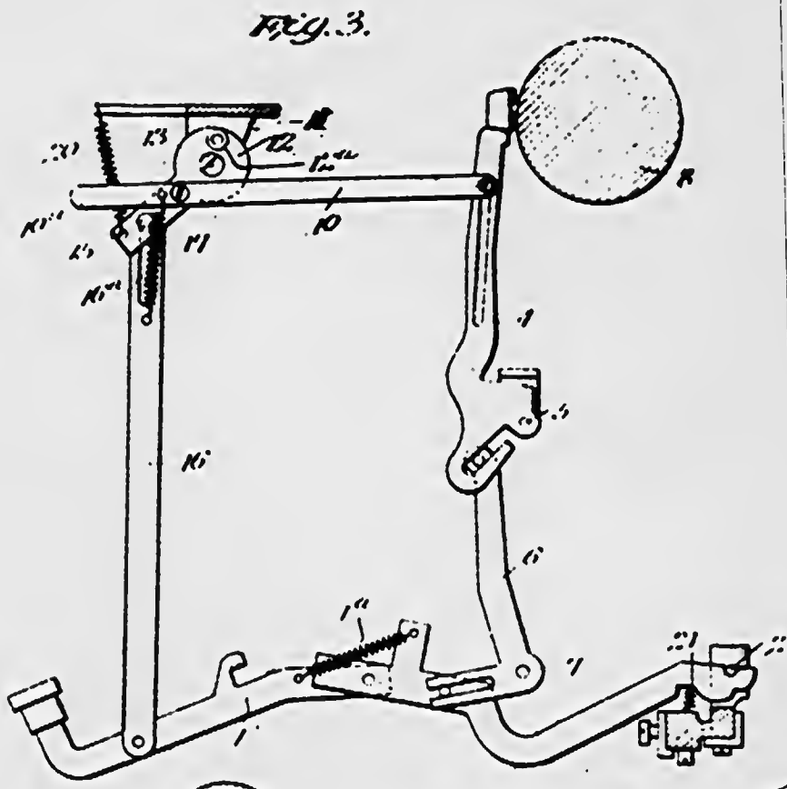

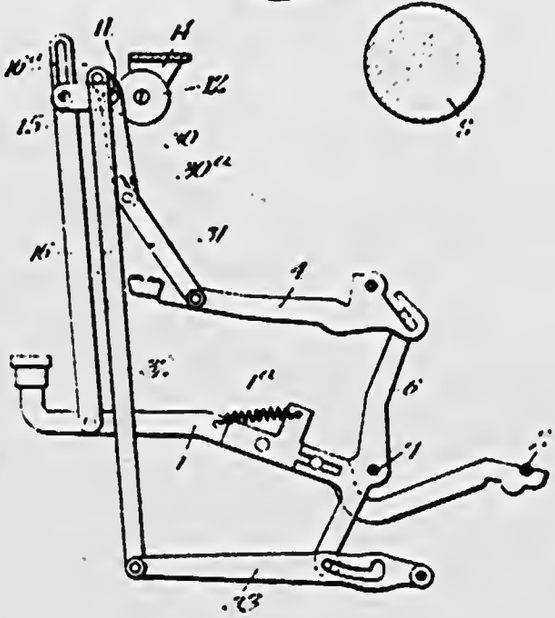

Fig. 5.

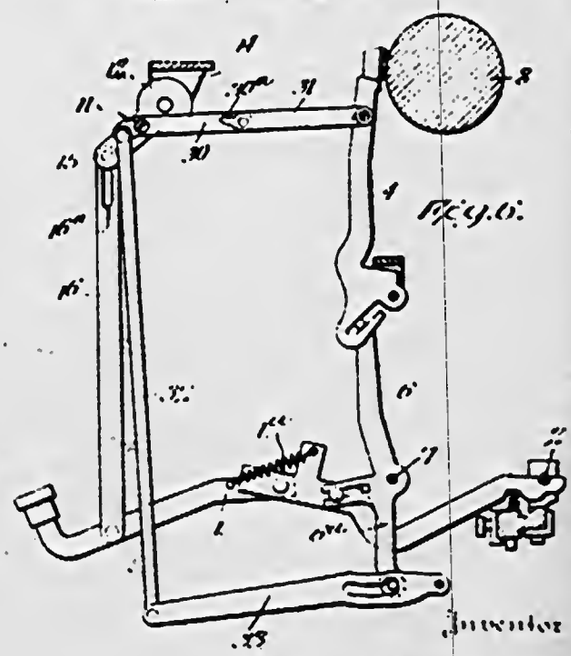

Fig. 6.

Inventor

Carl A. Joerissen.

By Cushman, Darby and Darby

Attorneys

96602

Feb. 23, 1932. C. A. JOERISSEN 1,846,339

TYPEWRITING MACHINE

Filed March 22, 1926 3 Sheets-Sheet 3

Fig. 7.

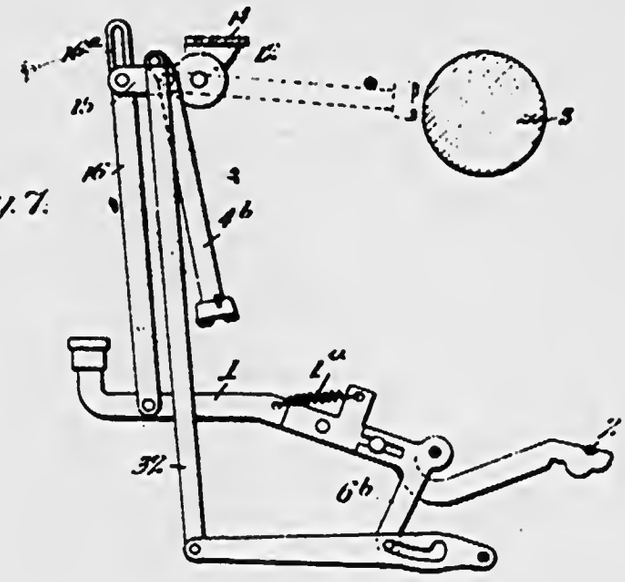

Fig. 8.

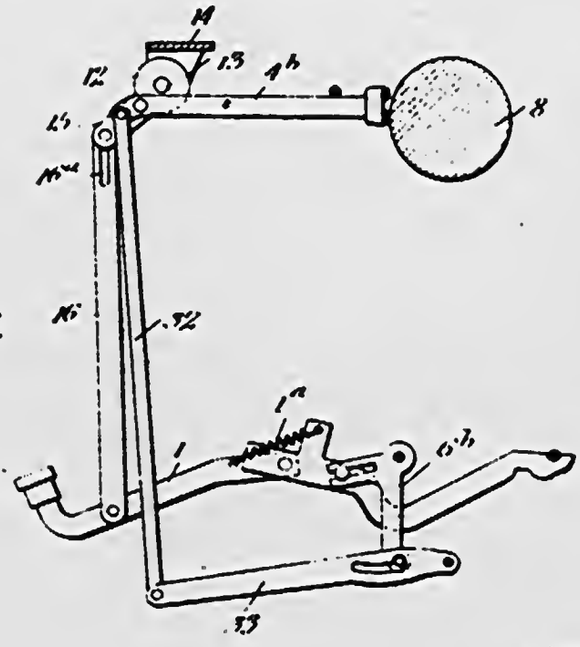

Inventor
Carl A. Joerissen.

By Cushman, Bryant & Darby
Attorneys

93

2—421

1926

CONTENTS:

1. Application	1 papers.	26.	
2. Rejection	JUN 8 1926	27.	
3. Amendment	A DEC 13 1926	28.	
4. Rejection	MAR 16 1927	29.	
5. Amendment	B MAR 12 1928	30.	
6. Rejection	AUG 6 1928	31.	
7. Amendment	C JAN 4 1929	32.	
8. Power Inspect	Apr 6 1929	33.	
9. Power Inspect	June 28 1929	34.	
10. Amendment	D Sept 26 1929	35.	
11. Rejection	OCT 4 1929	36.	
12. Amendment	E APR 1 1930	37.	
13. Final Rejection	JAN 14 1931	38.	
14. Amendment	JUL 11 1931	39.	
15. Tolstoi to Power Allowance		40.	
16. Oath July 29 1931		41.	
17. Comm G Rule	Jan 9 1932	42.	94
18. Amdt H Rule 78	JAN 22 1932	43.	
19. Notice (Rule 78)	Jan 27 1932	44.	
20. Oath Jan 28 1932		45.	
21. Oath Jan 28 1932		46.	
22. Notice of Reissue Filing		47.	
23.		48.	
24.		49.	
25.		50.	

197/25

Serial No. 96602

Feb. 23, 1932. C. A. JOERISSEN 1,846,339

TYPEWRITING MACHINE

Filed March 22, 1926 3 Sheets-Sheet 1

Fig. 1.

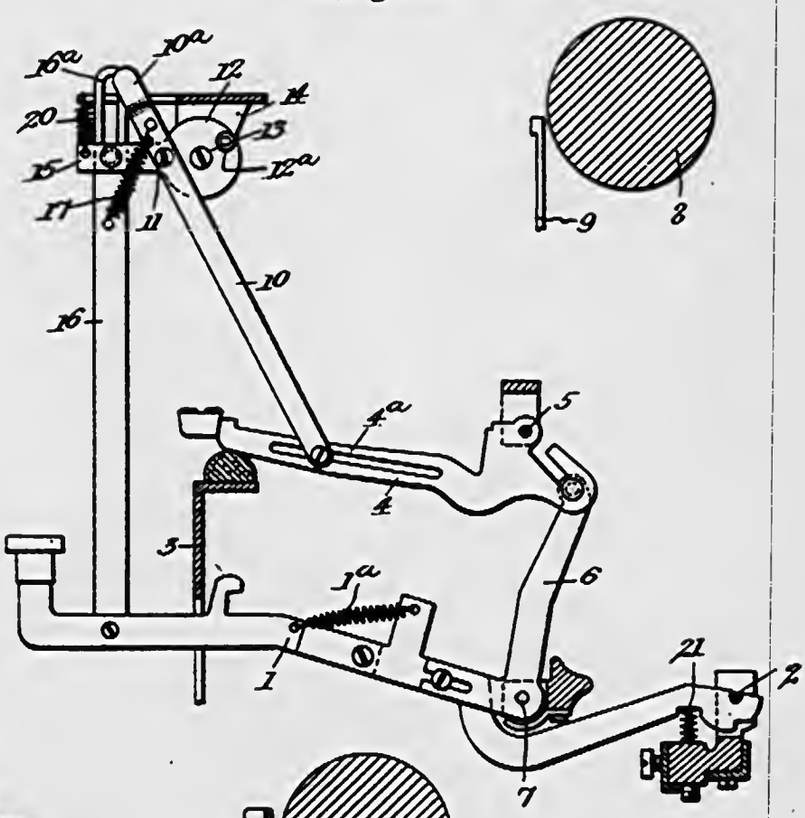

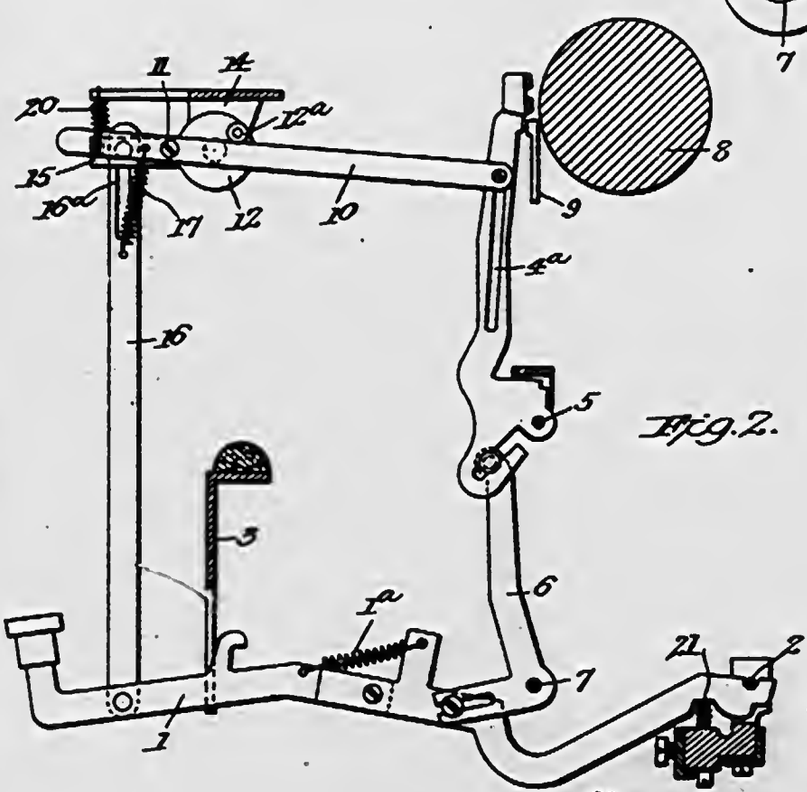

Fig. 2.

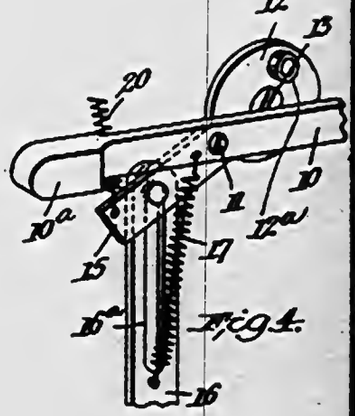

Fig. 4.

Inventor
Carl A. Joerissen

By Cushman, Bryant & Darby
Attorneys

Jan. 10, 1934

702,611
Serial No. ~~56602~~ Div. of
3 ... 2 41

Feb. 23. 1932. C. A. JOERISSEN 1,846,339

TYPEWRITING MACHINE

Filed March 22, 1926 3 Sheets-Sheet 2

Fig. 3.

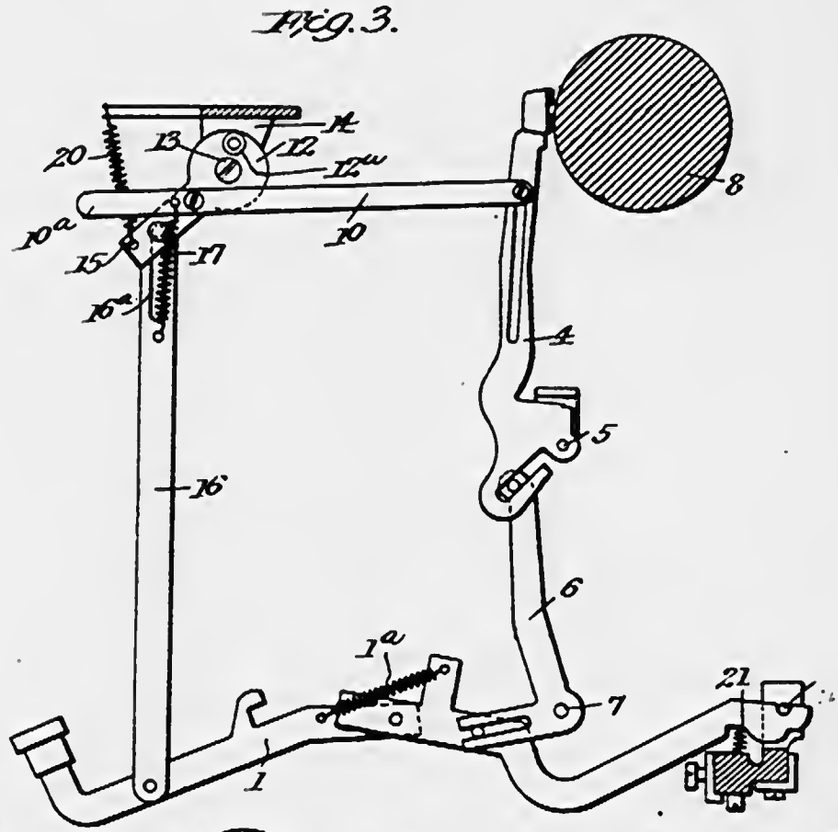

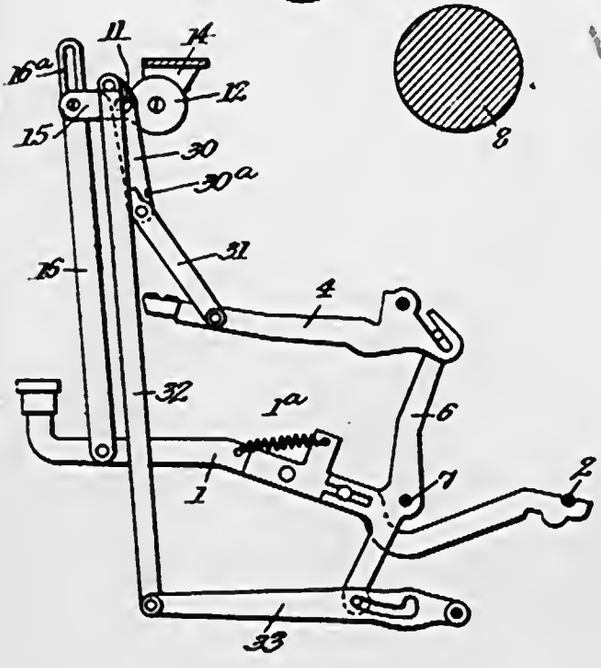

Fig. 5.

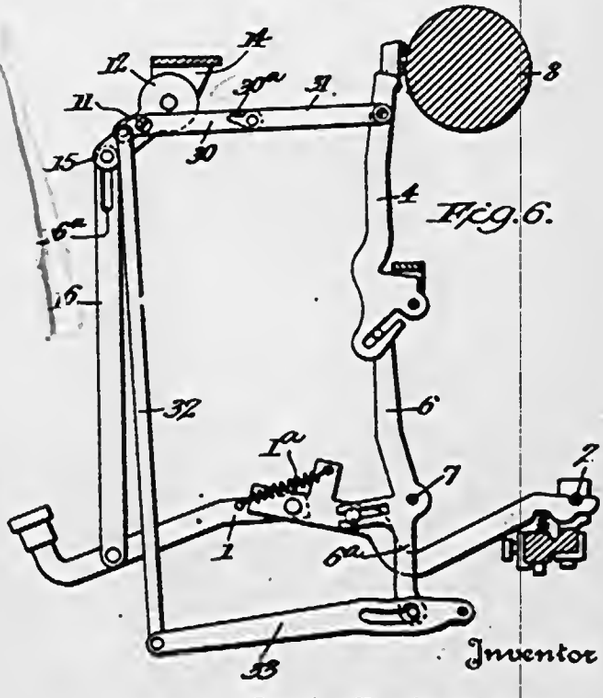

Fig. 6.

Inventor
Carl A. Joerissen.

By Cushman, Bryant & Darby
Attorneys

702 611
Serial No. 56602
3

Feb. 23, 1932. C. A. JOERISSEN 1,846,339

TYPEWRITING MACHINE

Filed March 22, 1926 3 Sheets-Sheet 3

Fig. 7.

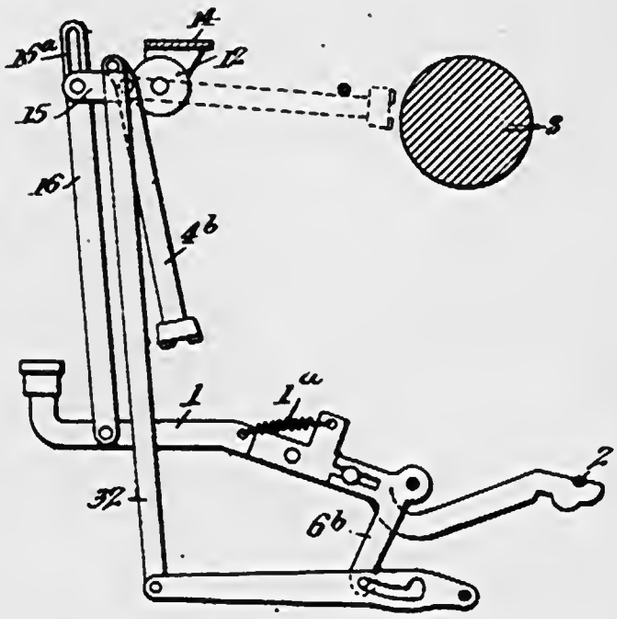

Fig. 8.

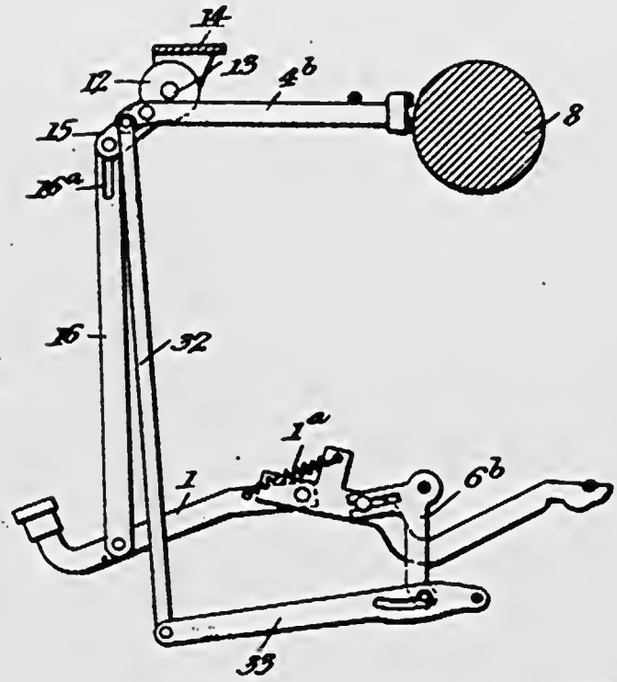

9
16

Inventor
Carl A. Joerissen,
By Cushman, Darby & Cushman
Attorneys

CASE B

197/25 Swingle

1856340

NUMBER (Series of 1925)

167734

PATENT NO.

1927

DATE MAY 3 - 1932

DIV. 30 58

(EX'R'S BOOK) ~~155~~ 19 ~~92~~ 83

Name CARL A. JOERISSEN

of WASHINGTON

~~State of~~ DISTRICT OF COLUMBIA

Invention TYPEWRITING MACHINE

ORIGINAL	RENEWED
APPLICATION FILED COMPLETE FEB 12, 1927	
PARTS OF APPLICATION FILED: Petition, Specification, Oath, First Fee $20, 3 sheets Drawings, FEB 12, 1927	16
2 Sub Ltr Drawings Jan 9 1931	
Examined and passed for Issue MAR 28 1932, 192	Reexam'd and passed for Issue, 192
E. T. Dowell Exr. Div. 58	Exr. Div.
Notice of Allowance MAR 23 1932, 192 By Commissioner.	Notice of Allowance, 192 By Commissioner.
Final Fee $25 Apr 2, 1932	Final Fee, 192

Attorney CUSHMAN, BRYANT & DARBY LOAN & TRUST BLDG CITY

Lord Cushman

American Security Bureaucracy

Associate Attorney

No. of Claims Allowed 22 Print Claims 22 in O. G. Class 127/25

Title as Allowed Typewriting Machine

Division of App., No. ....., filed ....., 19....

167734

Application for U. S. Letters Patent

CUSHMAN, BRYANT & DARBY
ATTORNEYS AT LAW
COUNSELORS IN PATENT CAUSES
WASHINGTON LOAN & TRUST BLDG.
900 F STREET, NORTHWEST
WASHINGTON, D. C.

FEB 23 1927

DIVISION 30

Petition

To the Honorable Commissioner of Patents
Washington, D. C., U. S. A.

Your petitioner, CARL A. JOERISSEN

citizen of the United States,
residing at WASHINGTON *in the ~~County of~~* District of Columbia
and State of ✓ *and whose post-office address*
is 1413 New York Avenue, Washington, D. C.
prays that Letters Patent may be granted to
for the improvement in TYPEWRITING MACHINE (CASE B)

set forth in the annexed specification.

And he *hereby appoints* CUSHMAN, BRYANT & DARBY, *a firm composed of Arlon V. Cushman, Arthur L. Bryant and John J. Darby, Jr., of the City of Washington, District of Columbia, whose register number is 7196,* his *attorneys, with full power of substitution and revocation, to prosecute this application, to make amendments therein, to sign* his *name to the drawings, to receive the Letters Patent, and to transact all business in the Patent Office connected therewith.*

Carl A. Joerissen

(Write first name in full.)

Specification

To All Whom it May Concern

Be it Known, *that* I, CARL A. JOERISSEN

a *citizen of the United States,*
residing at WASHINGTON *in the ~~County of~~* District of Columbia
and State of *have invented new and useful*
improvements in TYPEWRITING MACHINE ~~(CASE B)~~

of which the following is a specification:

The present invention relates to improvements in typewriting machines and particularly to the means for transmitting power from the key levers to the type carrying members of such a machine, whereby the parts may be operated with a minimum amount of noise. The invention represents in part a development along the general lines covered in United States Patent 1846334 issued to me February 23, 1932.

According to the present invention means are provided whereby the printing type will be positively forced into printing relation to the platen but will not strike the latter with a sudden blow as in the forms of machines at present commonly in use. More particularly the

-2-

present invention relates to means by which the means that normally act to check movement of the type carriers to printing relation may be rendered inoperative, at will, so that the machine will be converted from a "noiseless" to a form of the character commonly in use in which the type carriers contact with the platen with a sudden blow.

With this and other ends in view, the invention consists in the construction and arrangement of parts that will be hereinafter described and claimed, reference being had to the accompanying drawings in which,

Figure 1 is a perspective view of portions of a typewriting machine embodying the present invention,

Figures 2 and 3 are diagrammatic views of one of the type bars and actuating means shown in Figure 1, detached.

Figures 4 and 5 are views similar to Figures 2 and 3 illustrating a slightly different embodiment of the invention.

Figures 6 and 7, are detail views illustrating the manner in which the means for normally checking movement of the type carriers to printing relation may be rendered inoperative.

Figure 8 is a more or less diagrammatic view of another form of connection between the key levers and type carriers.

In the drawings only those portions of a typewriting machine necessary to illustrate the present invention are shown and, to a considerable degree, the illustration is more or less diagrammatic and conventional.

It will be appreciated, of course, that the invention is not limited to use with a typewriting machine in which the printing type are carried by pivotally mounted type bars, but as this is a common form of mechanism, such an embodiment is shown in the drawings.

It is to be understood that, except where specifically defined in the appended claims, the invention is not intended to be limited to the exact details shown in the drawings, and the latter are to be considered as illustrative rather than restrictive of the invention.

Referring to the drawings, 1 designates the platen of a typewriting machine and 2 a portion of the frame thereof to which are pivotally connected key levers 3. These parts may be of ordinary construction and any suitable means, such as a ~~leaf~~ spring 4, may be associated with each key lever to normally maintain it in the substantially horizontal position represented in Figure 1.

gas a

As is usual, the type bars 5 are pivotally connected to a suitable frame segment 6 and each type bar is connected with its corresponding key lever by means whereby when the outer end of the lever is depressed the type bar will be swung upward ~~and~~ rearward about its pivotal connection to bring the head thereof into printing relation with a ribbon positioned adjacent the platen to

16773

thereof into printing relation with a ribbon ~~7 and~~ positioned adjacent the platen 1.

In the embodiment of the invention illustrated, the connection between each type bar and its associated key lever includes a lever 10 which is fulcrumed at an intermediate point of its length, as at 11, upon a fulcrum support 12 which is mounted to rock about a rod 13 suitably supported in the machine frame.

At its rear end the lever 10 is connected by a link 14, with the type bar 5 and means are provided whereby when the forward end of the key or lever is depressed, the lever 10 will be rocked about its fulcrum 11 and, through the link 14, caused to move the type bar rearward and upward about its pivot into position to contact with the platen 1. As the pivotal connection between the lever 10 and link 14 comes into substantial alignment with the axes 11, 13, (and the connection between said link and type bar,) the movement of the bar will be temporarily checked, This will occur at a position of the parts intermediate of those illustrated in Figures 2 and 3, and just prior to the head of the type bar coming into printing relation with the platen. Thereafter the fulcrum support 12 will be bodily rocked slightly into the position shown in Figure 3, imparting a substantially straight line, longitudinal, movement to the lever 10 and link 14 forcing the type bar into printing relation with the platen, but without delivering a sharp or sudden blow in contacting therewith.

Figure 2 of the drawing illustrates the position of the several parts during a portion of the downward stroke of the key lever, prior to the members 10, 14 of

the toggle-like connection between the fulcrum support 12 and the type bar coming into alignment or position for checking swinging motion of the type bar; and Figure 3 shows the position of the parts at the completion of the printing movement of the type bar, the fulcrum support 12 having been rocked about its axis, by power produced during the final portion of the depression of the key lever as will be hereinafter more particularly described.

In the embodiment of the invention illustrated ~~in Figures 1 to 5~~, the key lever 3 is connected by a rod 15 with one arm of a bell crank lever 16 which is fulcrumed at 17 on a frame plate 18. The other arm of the bell crank lever 16 is, by a link 19, connected to the lever 10 so that when the forward end of the key lever 3 is depressed, the lever 10 will be positively moved upward and rearward about its fulcrum 11 to carry the type bar 5 from the position of rest, shown in Figure 1, toward the platen.

In the embodiments of the invention illustrated ~~in Figures 1 to 5 inclusive,~~ the forward end of each lever 10 is connected by a rod 20 with a lever 21 arranged beneath the key lever 3 and provided with a contact pad or cushion 22 with which the key lever contacts near the termination of its downward movement, so that said lever 21 is given a downward movement during the latter portion of each operation of the key lever.

The result of the key lever coming into contact with the abutment 22 on the lever 21 is to effect a bodily movement of the fulcrum support 12, which as before referred to, imparts a longitudinal movement to the lever 10 and link 14 to complete the travel of the type bar toward the platen, such contact occurring after the swinging movement of the type bar has been checked

as before described, by reason of the substantial alignment of the members of the toggle-like connection between the fulcrum support 12 and the type bar. This downward movement of the lever 21 is assisted somewhat by enlarging or slightly weighting the rear free end of said lever, as at 23. The key lever 3 will, as above described, impart a blow to the lever 21 near the end of its movement which will carry the lever 21 down and out of contact with the key lever.

The fulcrum support 12 above referred to, is connected by welding or other suitable means to one end of a leaf spring 30 which is suitably secured to a rod 31 of the machine frame and the bodily movement of the support 12 before referred to, acts to place this spring under slight tension which assists in returning the parts to normal position when pressure is removed from the key lever 3.

To insure that the fulcrum support 12 will not be bodily adjusted about its axis during the initial portion of the downward movement of a key lever and the consequent rearward swinging of a type bar, I preferably provide for positively holding said support in its normal position and ~~means~~ for automatically releasing said holding means as the parts come into position for checking the printing movement of the type bar.

As shown, a pawl or dog 33 is pivotally mounted on the frame plate 18 and one arm thereof is normally held in engagement with a recess in the hub of the fulcrum support 12 by the pressure of a short leaf spring 34. The other arm of the holding dog 33 extends into the path of the lever 10, whereby as this lever comes into substantial horizontal position, or the position wherein rearward swinging

movement of the type bar is checked, said lever, 10, will contact with and positively rock the pawl 33 about its pivot disengaging the fulcrum support 12 and permitting the latter to be moved about its axis, as previously described, to effect a completion of the printing movement of the type bar.

A stop 18a may be provided on the frame plate 18 to limit upward movement of the bell crank lever 16 and movement of the toggle-like connection, provided, by the lever 10 and link 14, between the key lever and type bar.

It will be understood that each key lever and its associated type bar are connected by levers and links as above described, the several type actions being duplicates of each other.

~~Instead of connecting each lever 10 directly~~ to a lever 21 as previously described, the arrangement of parts shown in Figures 4 and 5 may be employed.

In this form of the invention a bell crank lever 40 is arranged adjacent each side of the type basket and the rearward extending arms of said levers are linked, as at 41, to levers 42 corresponding generally to the levers 21, before referred to, and arranged beneath the series of key levers 3.

A cushion rail or rod. 44, connects the levers 42 and extends across the machine beneath all of the key levers 3 so that when any one of the latter is depressed the two bell crank levers, 40, and the levers 42 will be rocked. At their upper ends the bell crank levers 40 are connected by a bail 45 adapted to contact ~~with the outer, forward, ends~~ of the levers 10.

Cancel Pat

~~With this embodiment of the invention when the~~ downward movement of each key lever has practically been completed, and the swinging movement of the associated type bar has been checked as described, the bar 45 will be in direct contact with the ends of the levers 10 and during the latter part of each key stroke the levers 40. 42 will be actuated imparting a slight rocking movement to the fulcrum supports 12 sufficient to complete the printing movement of the ~~type bar associated with the actuated key lever.~~

Paragraph Cancelled

By the constructions so far described, it will be seen that the swinging movement of each type bar, effected by the depression of a key lever, will be checked prior to the type bar coming into printing relation with the platen and the continued depression of the key lever will effect a bodily rocking of the fulcrum support 12 imparting a substantially straight line movement to the head of the type bar, completing the travel of the type bar and bringing its head into printing relation with the platen.

If, however, it is desired that the type bar should have a continuous uninterrupted swinging movement from its position of rest to printing relation with the platen, means are provided whereby all of the fulcrum supports 12 may be simultaneously rocked so that the checking of the type bar movement, before described, will not occur.

As shown, a series of cams 50, one for each of the fulcrum supports 12, are mounted on a rod 51 suitably supported in the machine frame, each of said cams being adapted to engage the forward end of one of the fulcrum supports as the cam is rocked about said rod 51.

The several cams are shown as being connected by a rod 52 and one of them is provided with a key or manually actuatable member 53. By depressing this key all of the cams 50 will be rocked and thereby all of the fulcrum supports 12 adjusted downward and forward about the axial rod 13, into the relation to the other parts shown in Figure 4. With the members 12 in the positions shown in Figure 4 there will be no checking of the rearward movement of each type bar, but the latter will have an uninterrupted movement from its position of rest to printing relation to the platen whenever its corresponding key lever is depressed.

A pawl 55 is provided for engaging notches or corrugations formed in one of the cams 50 so that when said cams are moved from the position shown in Figure 1 to that illustrated in Figure 4, as above described, they will all be ~~returned~~ turned to such adjusted relation.

A slight upward pull on the key or mannually actuatable member 53 will disengage the pawl 55 and permit the cams to be returned to normal operative position, the leaf springs 30 acting to effect a corresponding movement of the fulcrum supports 12.

~~In Figure 8 of the drawings there is illustrated,~~ more or less diagrammatically, an embodiment of the invention in which the rocking of the fulcrum support 12 is effected directly by the key lever instead of through an auxiliary lever and connecting rod as hereinbefore referred to.

~~In this embodiment of the invention the key lever~~ 3 is connected directly to the lever 10, at the opposite ~~side of the fulcrum of the latter from that to which~~

~~the type bar is connected.~~

With this ~~arrangement the first~~ portion of the down stroke of the key lever will effect a rocking of the lever 10 and link 14, as previously described, the fulcrum support 12 being held stationary by the dog 33, or equivalent means. As the parts come into position for checking movement of the type bar toward the platen, the holding means for the fulcrum support 12 will be released and said support and lever 10 attached thereto will be together moved about the axis 13.

Page Cont'd

I CLAIM:

1. In a typewriting machine, the combination of a platen, a type carrier movable to and from printing relation to the platen, a key lever, means controlled by actuation of the key lever for positively moving the type carrier to printing position, including devices ~~means~~ for normally checking such movement of the type carrier prior to its reaching printing position, and means for rendering said checking devices ~~means~~ to check such movement inoperative.

2. In a typewriting machine, the combination of a platen, a type carrier movable to and from printing relation to the platen, a key lever, means controlled by actuation of the key lever for effecting initial movement of the type carrier toward the platen, means for normally checking such movement of the type carrier ~~without affecting movement of the key lever~~, means actuated by movement of the key ~~key~~ lever for effecting completion of the movement of the type carrier to printing relation to the platen, and means for rendering said checking means inoperative to check such movement.

3. In a typewriting machine, the combination of a platen, a plurality of type carriers each movable to and from printing relation to the platen, a key lever associated with each type carrier ~~bar~~, means controlled by actuation of each key lever for positively moving the associated type carrier to printing position, means for normally checking such movement of each type carrier prior to its reaching printing position, and

16778 12

means for rendering all of said checking means inoperative.

4. In a typewriting machine, the combination of a platen, a type bar mounted to swing upward and rearward into printing relation to the platen, a key lever, means controlled by actuation of the key lever for moving the type bar to printing position, ~~means~~ and including devices for normally checking such movement of the type bar prior to its reaching printing position, and means for rendering said checking ~~means~~ devices inoperative to check such movement.

5. In a typewriting machine, the combination of a platen, a type carrier movable to and from printing relation to the platen, a key lever, means controlled by actuation of the key lever for effecting movement of the type carrier to printing position, means for checking such movement of the type carrier, including a pivotally mounted member connected to the type carrier, and means for adjusting said pivotally mounted member to render said checking means inoperative.

6. In a typewriting machine, the combination of a platen, a pivotally mounted type bar adapted to swing upward and rearward into printing relation to the platen, a key lever, means controlled by the key lever for positively moving the type bar to printing position, means for normally checking such movement of the type bar including a pivotally mounted member connected to the type bar, and means for adjusting said pivotally mounted member about its axis to render the checking means inoperative.

7. In a typewriting machine, the combination of a platen, a type carrier movable to and from printing relation to the platen, a key lever, connections between the key lever and the type carrier including a lever having one end connected with the type carrier, a pivotally mounted support for the last said lever, and means normally holding said fulcrum support stationary, ~~the parts being so arranged that~~ movement of the type carrier ~~toward~~ the platen will be checked ~~prior to~~ the carrier reaching printing ~~position, said holding means~~ and being automatically released to permit movement of the fulcrum support with the lever to carry the type carrier to printing position.

Insert a3

Per a

Per a

8. In a typewriting machine, the combination of a platen, a type carrier movable to and from printing relation to the platen, a key lever, connections between the key lever and the type carrier including a lever having one end connected with the type carrier, a pivotally mounted support for the last said lever, and a pawl engaging the fulcrum support and normally holding it stationary, ~~the parts being so arranged~~ that movement of the type carrier toward the platen will be checked prior to its reaching printing posi~~tion and~~ the tail of the pawl extending into the path of movement of the last said lever, whereby the fulcrum support will be automatically released and permitted to move with said lever to carry the type carrier to printing position.

Insert a4

Per a

9. In a typewriting machine, the combination of a platen, a type carrier movable to and from printing relation to the platen, a key lever, connections between the key lever and the type carrier including a lever having one end connected with the type carrier ~~bar~~, a pivotally mounted support for the last said lever, means normally holding said fulcrum support stationary, and ~~the parts being so arranged that~~ movement of the type carrier ~~toward~~ the plated will be checked ~~prior~~ to its reaching printing position, ~~said holding means~~ being automatically released to permit movement of the fulcrum support with the lever fulcrumed thereon to carry the type carrier to printing position, and manually adjustable means for rendering said holding means inoperative.

Insert a5

Para

10. In a typewriting machine, the combination of a platen, a type carrier movable to and from printing relation to the platen, a key lever, connections between the key lever and the type carrier including a lever fulcrumed at an intermediate point in its length, a pivotally mounted fulcrum support for the last said lever, means normally holding said fulcrum support stationary, and ~~the parts being so arranged that~~ movement of the type carrier ~~effected~~ by actuation of the key ~~lever will~~ be checked prior to its reach~~ing printing position, said holding means~~ being automatically released by the lever fulcrumed on said fulcrum support as the movement of the type carrier is checked, and means for rocking the fulcrum support about its axis to effect completion of the movement to printing position of the type carrier.

insert a6

Para

167724

15

11. In a typewriting machine, the combination of a platen, a type carrier movable to and from printing relation to the platen, a key lever, connections between the key lever and the type carrier including a lever fulcrumed at an intermediate point in its length, a pivotally mounted fulcrum support for the last said lever, means normally holding said fulcrum support stationary, and ~~the parts being so arranged that movement of the type carrier effected by actuation of the key lever will be checked prior to its reaching printing position,~~ ~~said holding means~~ being automatically released by the lever fulcrumed on said fulcrum support as the movement of the type carrier is checked, and supplemental means including a member for rocking the said fulcrum support to effect completion of the movement to printing position of the type carrier.

12. In a typewriting machine, the combination of a platen, a type carrier movable to and from printing relation to the platen, a key lever, connections between the key lever and the type carrier including a lever fulcrumed at an intermediate point in its length, a pivotally mounted fulcrum support for the last said lever, ~~the parts being so arranged that movement of the type carrier effected by actuation of the key lever will be checked prior to its reaching printing position,~~ and means including a member extending beneath the key lever for positively rocking said fulcrum support to effect completion of the movement to printing position of the type carrier.

13. In a typewriting machine, the combination of a platen, a type bar movable to and from printing relation to the platen, a key lever, connections between the key lever and the type bar including a lever fulcrumed at an intermediate point in its length, a pivotally mounted fulcrum support for the last said lever, ~~the parts being so~~ arranged that ~~movement of the type bar effected by actuation of the key lever will be checked prior to the type bar~~ reaching ~~printing position~~, a pivotally mounted member extending beneath the key lever and adapted to be rocked thereby, and means for transmitting movement of said member to the pivotally mounted fulcrum support to bodily rock the latter and effect completion of the movement of the type bar to printing position.

14. In a typewriting machine, the combination of a platen, a type carrier movable to and from printing relation to the platen, a key lever, connections between the key lever and the type carrier including a lever having one end connected with the type ~~bar~~ carrier, a pivotally mounted support for the last said lever, ~~the parts being so arranged that movement of the type carrier toward the platen will be checked prior to its reaching printing position,~~ and manually operable means for bodily rocking said fulcrum support to render the checking means inoperative.

15. In a typewriting machine, the combination of a platen, a type carrier movable to and from printing relation to the platen, a key lever, con-

nections between the key lever and the type carrier including (3) a lever having one end connected with the type carrier ~~bar~~ a'', a pivotally mounted support for the last said lever, means normally holding said fulcrum support stationary, ~~the parts being so arranged that movement of the type carrier toward the platen will be checked prior~~ to its reaching printing position, and manually operable means for bodily rocking said fulcrum support to render the checking means inoperative.

insert a'' pra

pera

16. In a typewriting machine, the combination of a platen, a type carrier movable to and from printing relation to the platen, a key lever, connections between the key lever and the type carrier, including (3) a lever having one end connected with the type carrier ~~bar~~ a'', a pivotally mounted support for the last said lever, ~~the parts being so arranged that movement of the type carrier toward the platen will be checked prior to its reaching printing position,~~ manually operable means for bodily rocking said fulcrum support to render the checking means inoperative, and means for retaining the fulcrum support in such adjusted position.

insert a'2

pera

Insert a'3

Clas 17-20

167734

In testimony whereof I *have hereunto set* my *hand.*

Carl A. Joerissen

(Write first name in full.)

Oath

~~County~~ of District of Columbia } ss.

State of

CARL A. JOERISSEN

the above-named petitioner, being duly sworn, deposes and says that he is a *citizen of the United States, and resident of* Washington, D. C.

and that he *verily believes* himself *to be the original, first, and* sole *inventor of the improvement in* TYPEWRITING MACHINE

described and claimed in the annexed specification; that he *does not know and do not believe that the same was ever known or used before* his *invention or discovery thereof; or patented or described in any printed publication in any country before* his *invention or discovery thereof or more than two years prior to this application; or in public use or on sale in the United States for more than two years prior to this application; that said invention has not been patented in any country foreign to the United States on an application filed by* him *or* his *legal representatives or assigns more than twelve months prior to this application, and that no application for patent on said improvement has been filed by* him *or* his *representatives or assigns in any foreign country.*

Carl A. Joerissen

(Write first name in full.)

Sworn to and subscribed before me, this 10th *day of* February 19 27

Albert H. Shellington

[SEAL] (Notary sign here.)

Notary Public, DC

Acknowledgment should be made before a Notary Public, WHO MUST AFFIX HIS SEAL. If Notary has no seal, a certificate of the Judge or Clerk of the Court showing that the Notary is qualified, must be attached. If the oath is taken before a Justice of the Peace, a certificate of the Judge or Clerk of the Court showing that such Justice is qualified, must be attached.

277

167734

197/25 Div 58.

Guggle 6340

May 3

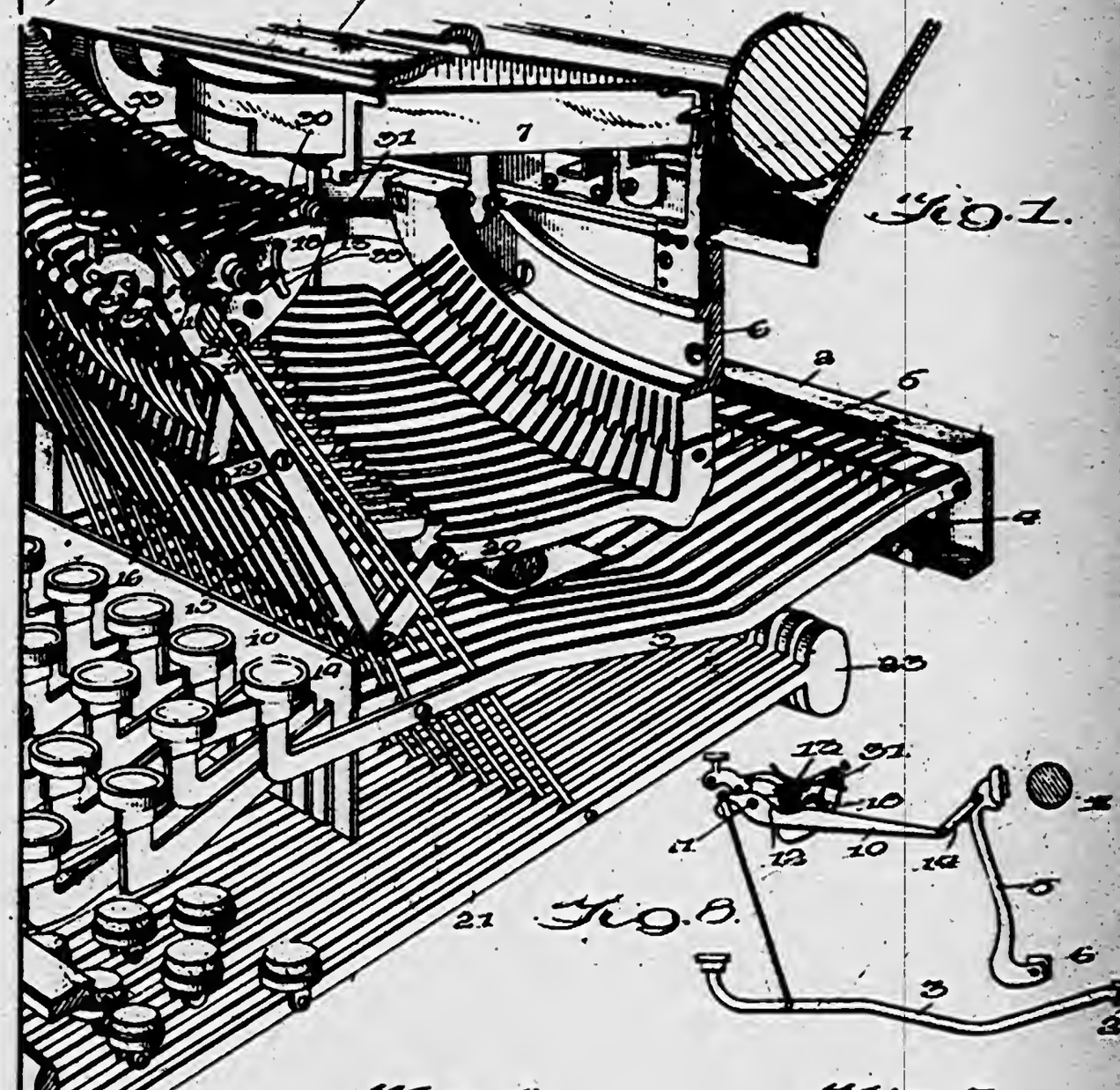

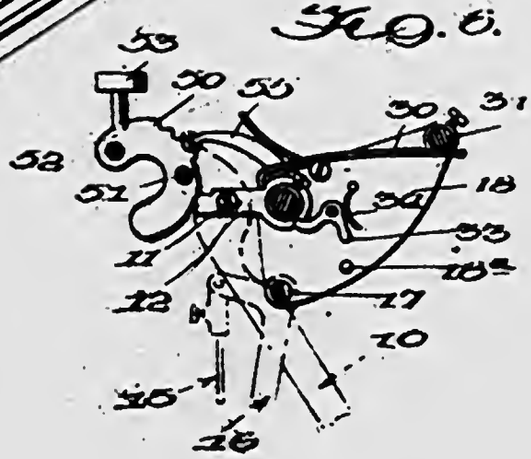

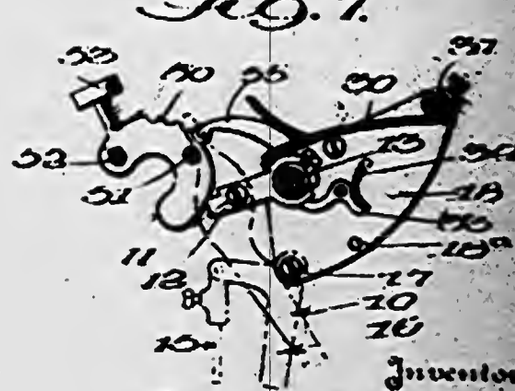

Inventor

Carl A. Joerissen

By Cushman Bryant & Kirby

Attorneys

58

370

197-

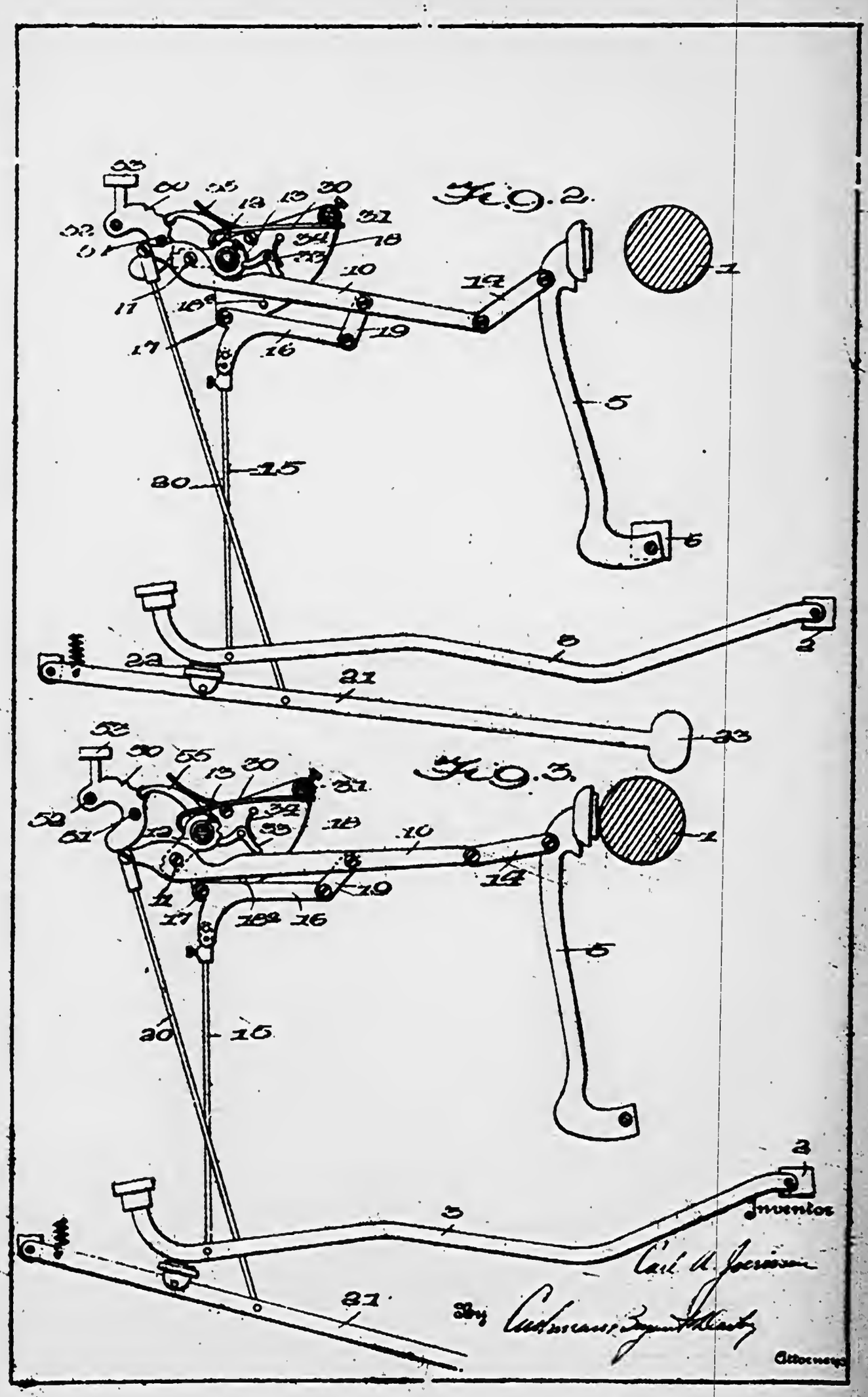
Fig. 2.
Fig. 3.
Inventor
Carl A. Jacobson
By Cushman, Bryant & Darby
Attorneys

167734

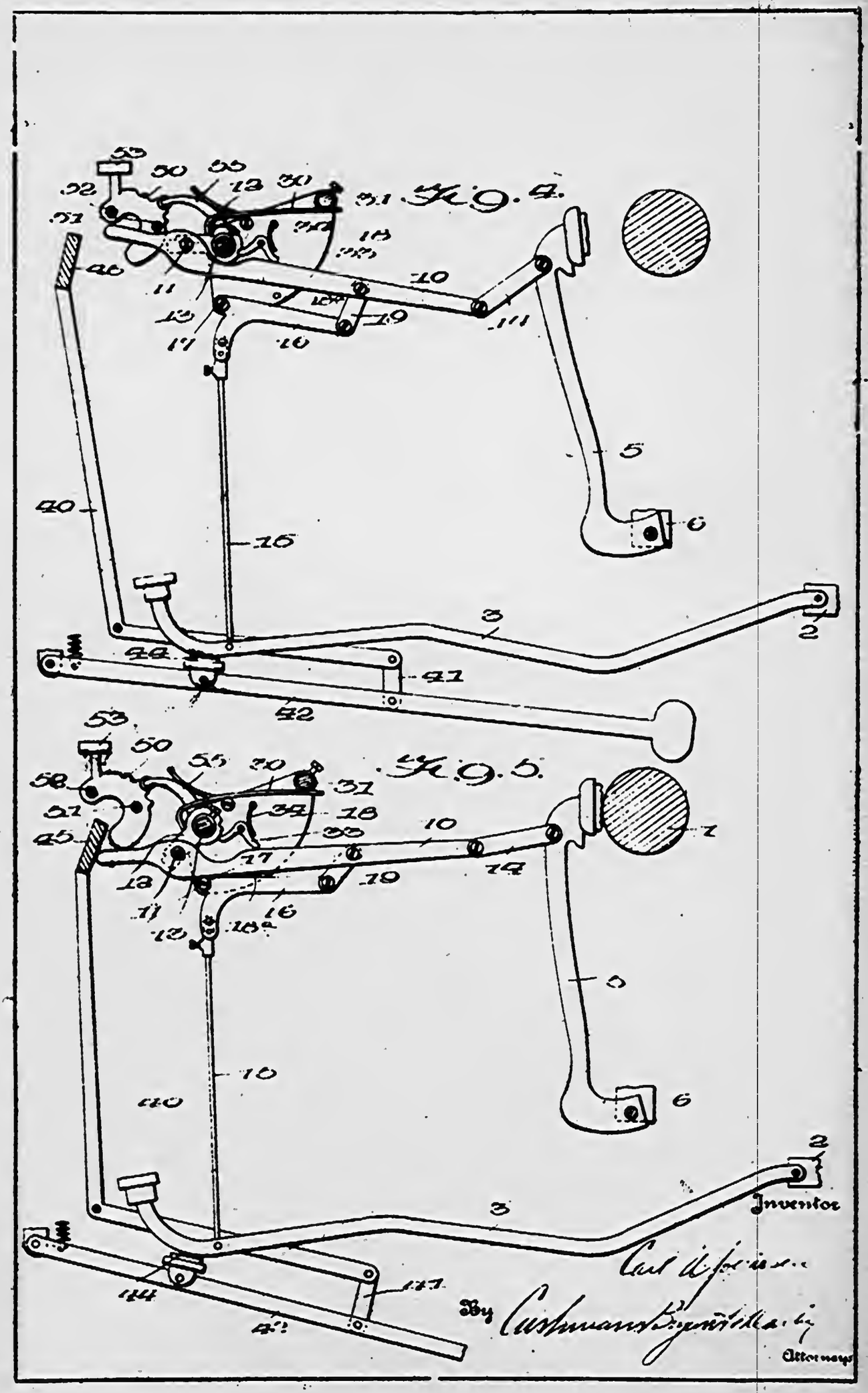

of Washington, this twenty-seventh day of November, in the year of our Lord one thousand nine hundred and thirty-five and of the Independence of the United States of America the one hundred and sixtieth.

CONWAY P. COE
Commissioner of Patents.

(Seal)

Attest:

D E WILSON
Chief of Division.

(Here follow photostatic marked pages 350 to 372)

373 Div. 30 Room 248 JWQ/R Paper No. 2

DEPARTMENT OF COMMERCE
United States Patent Office
Washington

June 21, 1927.

Please find below a communication from the Examiner in charge of this application.

THOMAS E. ROBERTSON
Commissioner of Patents.

Mailed June 21 1927

Applicant: C. A. Joerissen
Ser. No. 167,734
Filed Feb. 12, 1927
For Typewriting Machine

Cushman, Bryant & Darby,
Loan & Trust Bldg.,
Washington, D. C.

References placed of record:—

1,282,410, Going, Oct. 22, 1918, 197-25,
1,312,821, Anderson, Aug. 12, 1919, 197-25,
735,090, Green, Aug. 4, 1903, 197-26,
842,586, Schaaff, Jan. 29, 1907, 197-29,
1,123,771, Lorenz, Jan. 5, 1915, 197-149.

Objection is made to the drawing because Fig. 1 contacts with the border line.

This defect can be corrected.

Claims 1 and 2 are rejected on either Green, Schaaf.

Claims 3 and 4 are rejected on Green in which part 45 is movable to produce a checking action, or non checking action to the movement of the type bar just prior to the printing impact.

Claim 5 is rejected on either Anderson 1,282,410 Going in which it appears that parts 33, 27 respectively of these patents may be adjusted to render the toggle inoperative as a type bar movement checking means.

Claims 6 does not distinctly define anything patentable over Anderson, Going and is rejected.

Claims 7 to 16 are rejected as being indefinite and functional. These claims state that the parts are arranged to produce a certain operation, but do not set forth the operative relation of parts to each other, or their arrangement whereby the desired result is obtained.

This action must be responded to within six months.

374 Where a function is dependent upon a certain operative relation or arrangement of parts, this relation or arrangement should be distinctly described in a claim.

Claims 7 to 16 do not sufficiently describe the structure and relation of parts whereby the function stated in these claims may be obtained. The description, connections including a lever defines nothing definite, or a structure which would produce the operation desired by applicant. Ex parte Jones, Jones and Werzner 353 O. G. 4.

In the patent to Lorenz means is provided to vary the force of type impact.

J L SHIPMAN
Examiner.

J.W.Q.

Line 4, change "bar" to --carrier--.

Line 7, correct the spelling of "means".

Claim 5.

At the end of line 6 insert --prior to its reaching printing position--.

a1

Claim 6.

Line 7, after "bar" insert --prior to its reaching printing position--.

a2

Claim 7.

Line 5, before "a lever" insert --means for checking movement of the carrier toward the platen prior to its reaching printing position and comprising--

a3

Line 7, before "means" insert --and".

Cancel beginning with "the" line 8 to and including "means" line 11 and substitute --and--.

Claim 8.

At the end of line 4 insert --means for checking movement of the carrier toward the platen prior to its reaching printing position and comprising--.

a4

Cancel beginning with "the" line 8 to and including "and" line 11.

Claim 9.

Line 5, before "a lever" insert --means for checking movement of the carrier toward the platen prior to its reaching printing position and comprising--.

a5

Line 6, change "bar" to --carrier--.

Cancel beginning with "the" line 8 to and including "means" line 11 and substitute --and--.

Claim 10.

Line 4, after "including" insert --means for checking movement of the carrier toward the platen prior to its reaching printing position and comprising--.

a6

167784

26

Cancel beginning with "the" line 8 to and including "means" line 11 and substitute --and--.

Claim 11.

Line 5, after "including" insert --means for checking movement of the carrier toward the platen prior to its reaching printing position and comprising--

Cancel beginning with "the" line 8 to and including "means" line 11 and substitute --and--.

Line 14, after "member" insert --for--.

Claim 12.

Line 4, after "including" insert --means for checking movement of the carrier toward the platen prior to its reaching printing position and comprising--.

Cancel beginning with "the", first occurrence line 7 to and including "position" line 9.

Claim 13.

Line 4, after "including" insert --means for checking movement of the carrier toward the platen prior to its reaching printing position and comprising--.

Cancel beginning with "the" line 6 to and including "position" line 9.

Claim 14.

Line 5, after "including" insert --means for checking movement of the carrier toward the platen prior to its reaching printing position and comprising--

Line 6, change "bar" to --carrier--.

Cancel beginning with "the" line 7 to and including "position" line 9.

Claim 15.

Line 5, after "including" insert --means for checking movement of the carrier toward the platen prior to its reaching printing position and comprising--

Line 6, change "bar" to --carrier--.

Cancel beginning with "the" line 8 to and including "position" line 10.

Claim 16.

Line 5, after "including insert means for checking movement of the carrier toward the platen prior to its reaching printing position and comprising

Line 6, change "bar" to --carrier--.

Cancel beginning with "the" line 7 to and including "position" line 9.

Add the following claims:

17. In a typewriting machine, the combination of a platen, a series of pivotally mounted type bars which normally lie in a substantially horizontal position, a series of key levers, one for each type bar, connections between each lever and one of the type bars for swinging the type bar into printing relation to the platen when the key lever is actuated, and including means for checking movement of each type bar prior to its coming into printing relation with the platen, and means for rendering inoperative the means for normally checking movement of the type bars to printing relation with the platen.

18. In a typewriting machine, the combination of a platen, a series of pivotally mounted type bars which normally lie in a substantially horizontal position, a series of key levers, one for each type bar, connections between each lever and one of the type bars for swinging the type bar into printing relation to the platen when the key lever is actuated, and including means for checking movement of the type bar prior to its coming into printing relation to the platen, a rock shaft extending longitudinally of the platen above the key levers, and devices

on said shaft for rendering all of said checking means inoperative when said shaft is rocked.

19 ¶ 19. In a typewriting machine, the combination of a platen, a type carrier movable to and from printing relation to the platen, a key lever, means controlled by actuation of the key lever for positively moving the type carrier to printing position, and including means for normally checking such movement of the type carrier prior to its reaching printing position, and means for rendering said checking means inoperative.

~~20. In a typewriting machine, the combination of a platen, a series of pivotally mounted type bars, a series of key levers, one for each type bar, connections between each lever and one of the type bars for swinging the type bar into printing relation to the platen when the key lever is depressed, and means for effecting adjustment of the connections between the key lever and type bars whereby at will the operator may vary the force with which the type bar will strike the platen.~~

Cancel C

20 ~~21.~~ In a typewriting machine, the combination of a platen, a series of pivotally mounted type bars, a series of key levers, one for each type bar, connections between each lever and one of the type bars for swinging the type bar into printing relation to the platen when the key lever is depressed, and means adjustable by an operator whereby the movement of the type bars may be checked prior to reaching printing relation to the platen or permitted to swing uninterruptedly from inactive position to printing relation to the platen.

375 Application Div. Dec. 17 1927 U. S. Patent Office

U. S. Patent Office Paper No. 3-A Dec 19 1927 Division 30

In the United States Patent Office

In re Application of
Carl A. Joerissen, for
TYPEWRITING MACHINES,
Filed Feb. 12, 1927,
Serial No. 167,734. Div. 30.

* * *

December 16, 1927

Hon. Commissioner of Patents
Washington, D. C.

Sir:

The objection to the drawing will be removed when the case is otherwise in condition for allowance.

Supplementing an interview kindly granted by the Assistant Examiner, the case is hereby amended as follows:

IN THE SPECIFICATION

Page 3.

Line 2, after "means" insert —that—.

Page 4.

Line 22, cancel "leaf".

Page 7.

Line 24, cancel "means".

Page 8.

Line 9, place a comma after "connection".

Line 10, cancel the comma before "by".

IN THE CLAIMS

Claim 2.

Lines 7 and 8, cancel "without effecting movement of the key lever".

Claim 3.

(Here follow photostats marked pages 376 to 379)

380 *Remarks*

An allowance of the application as thus amended is requested.

By the amendment all of the claims are believed to be freed from the informalities noted in the Official Letter.

Certain of the other claims have been slightly amended and reconsideration of the others is requested because it is believed that in their present form each of them very clearly distinguishes applicant's invention from the references cited against them.

Considering first the patents to Green and Schaaff in view of which claims 1 to 4 were rejected, it was pointed out at the interview referred to, that neither of these references discloses a construction which meets the terms of applicant's claims. As pointed out in the specification, the particular object of applicant's invention is to provide a means for normally checking movement of the "*type carrier* prior to its reaching printing position", the mechanism also including means for rendering the checking means inoperative The structures of the Green and Schaaff patents include adjustable means whereby the movement of the *key levers* may be varied, but do not include any means whatever for checking movement of the type bar. In the structures of both of these patents, every movement of the type bar following or depending upon the depression or actuation of the key lever is uninterrupted and continuous from its normal position of rest to printing relation to the platen. There is no means whatever in the machines of the Green and Schaaff patents for "*checking* such movement of the type carrier". The "part 45" of the machine of Green specifi-
cally referred to in the Official Letter cannot produce
381 any checking action whatever to the movement of the
type bar. Such "pad" merely controls the extent to which the key lever may be depressed but the movement of the type bar initiated by actuation of the key lever is unimpeded by any adjustment of said pad.

Regarding claim 5, it is submitted that even if the parts 33 and 24, respectively, of the references might be adjusted, by a suitable implement, to render the toggle inoperative, such adjustment is not contemplated by the patentees and would serve no useful purpose. Neither of these reference structures includes any means for checking movement of the type carrier prior to its reaching printing position, nor any pivotally mounted member which can be adjusted as defined in the claim. In the reference structures, the parts are initially so positioned that when the toggle is straightened the type carrier will be in printing relation to the

platen. Therefore, the toggles of the reference structures do not check movement of the type carrier, prior to its reaching printing position as defined in the claim.

Replying to the Examiner's statement that the Lorenz patent, referred to, shows a means "to vary the force of type impact", it is submitted that applicant has not made any claim which can be read upon the disclosure of this patent. He appears to be the first to have provided a means for checking movement of the type carrier prior to its reaching printing relation to the platen and specifically such a means in the connection between the type carrier and key lever, in combination with means whereby
382 said checking means may be rendered inoperative at will.

Very respectfully,

CUSHMAN BRYANT & DARBY
Attorneys for Applicant.

ALB:MW

383 Div. 30 Room 260 Paper No. 4

JWQ-G DEPARTMENT OF COMMERCE
United States Patent Office
Washington

Mailed May 14 1928

May 14, 1928

Please find below a communication from the Examiner in charge of this application.

THOMAS E. ROBERTSON
Commissioner of Patents.

Applicant: Carl A. Joerissen
Ser. No. 167,734
Filed Feb. 12, 1927
For Typewriting Machine

Cushman, Bryant & Darby
Loan & Trust Bldg.
City.

In response to amendment filed Dec. 17, 1927.
Additional references placed of record:

885,346	Jackson	Apr. 21, 1908	197-23
1,615,540	Going	Feb. 1, 1927	197-27
842,586	Schaaff	Jan. 29, 1907	197-29

The drawing awaits correction by eliminating the contacts between the border line and Fig. 1 of the drawing.

In the preamble to the specification erase (Case B).

Claims 1 and 2 are rejected in view of the newly discovered patents to Jackson, Going.

In each of these patents the movement of the type carrier is checked prior to impact with the platen, and the checking means is rendered ineffective or inoperative for the printing impression.

Claim 4 is rejected on either Jackson, Going.

Line 8 of claim 11 correct the spelling of fulcrum.

Claims 1 and 4 are still thought to be sufficiently general in terms to be met in 735,090 Green 197-26 of record.

These claims include means for normally checking the movement of the type carrier prior to its reaching printing position, and bar 45 of Green is thought to perform the function stated for said means.

Said bar 45 is rotatable to be rendered inoperative, and the means whereby this bar may be rotated, answers the means for rendering the checking means inoperative as included in claims 1 and 4.

Claims 1 and 4 do not define any definite structure
384 for the checking means and do not set forth any operation thereof different from the operation of the said bar 45.

Claims 1 and 4 are therefore further rejected on Green.

Claim 17 is rejected on Going.

Means for changing the position of fulcrum 11 is disclosed in this application. The statement in claim 20 means for effecting adjustment in the connection between the key lever and the type bar is thought not to accurately define the adjustment disclosed.

There does not appear to be any adjustment in the connection between a key lever and a type bar.

Claim 20 is rejected as being misdescriptive and is further rejected on 1,123,771 Lorenz 197-149 of record in which the fulcrum of a toggle action is adjustable to vary the printing impression.

OCT 22 1928 OFFICE

U. S. PATENT OFFICE OCT 23 1928 DIVISION 58

IN THE UNITED STATES PATENT OFFICE

C. A. Joerissen,

TYPEWRITING MACHINES,

Filed February 12, 1927,

Serial No. 167,734. Division 58.

October 22, 1928.

Hon. Commissioner of Patents,

Washington, D. C.

Sir:-

Supplementing an interview kindly granted by the Examiner, and in accordance with the understanding reached at that interview, the above entitled application is hereby amended as follows:

In the preamble to the specification cancel "(Case B)".

IN THE CLAIMS:

Claim 1:

Line 9, after "inoperative" insert -to check such movement-

Claim 2:

Line 11, after "inoperative" insert -to check such movement-

Claim 4:

Line 9, after "inoperative" insert -to check such movement-

Claim 11:

Line 8, change "dulcrum" to -fulcrum-

Claim 20:

Line 6, after "for" insert -simultaneously-

Line 7, change "in" to -of- and "lever" to -levers-

Same line, after "and" insert -associated-

Line 9, change "bar" to -bars- and after "platen" insert -without varying the strokes of the key levers-

Claim 21:

Line 10, after "platen" insert independent of any variation in the length of movement of the key levers

REMARKS

As thus amended the application is believed tobe placed in condition for allowance.

The drawing has been corrected as requested.

Claims 1, 2, 4, 20 and 21 have been amended as discussed with the Examiner, and each of them is now believed to very definitely and patentably distinguish applicant's invention from the disclosures of the patents cited. Regarding claims 1, 2 and 4, it was pointed out at the interview referred to that none of the patents to Jackson, Going or Green discloses a typewriting machine having means for normally checking movement of the type carrier in combination with "means for rendering said checking means inoperative to check such movement". The "segmental carrier E" of the machine of the Jackson patent, which, it is understood, was considered as a means for checking movement of the type carrier is always, and necessarily, itself moved to complete the printing stroke and the machine does not include any means whatever for rendering such means "inoperative".

Similarly the "stop 31" of the machine of the Going

Claim 20 is further rejected on 842,586 Schaaff in which means provides for two different characters of type impacts.

Claim 21 is sufficiently general in description of structure to be met in Green, and is rejected.

Claims 3, 5 to 16 and 19 are allowed.

J L SHIPMAN
Examiner.

J.W.Q.

385 U. S. Patent Office Paper No. 5 Jun 29 1928
Division 30

Application Div. May 18, 1926 U. S. Patent Office

In the United States Patent Office

C. A. Joerissen
TYPEWRITING MACHINE
Filed Feb. 12, 1927
Serial No. 167,734 Div. 30.

* * *

May 17, 1928

Account

Hon. Commissioner of Patents,
Washington, D. C.

Sir:

The Chief Draftsman is requested to correct Figure I of the drawing to obviate the objection of record.

Charge the cost of this service to our account.

Respectfully,

CUSHMAN BRYANT & DARBY
Attorneys for Applicant.

Received in Div. C May 31 1928

ALB:MW

Correction Ordered Jun 14 1928 50 Account Account Charged Financial Clerk. D

Corrected Jun 19 1928

Approved J. W. Q. May 21, 28

(Here follow photostats marked pages 386 and 387)

388 patent is never moved or rendered "inoperative to check" movement of the type bars.

In the machine of the Green patent movement of the key levers can be checked by adjusting the stop 45, but this, as pointed out at the interview and in the record of the application, is quite a different means from the checking means of applicant's invention which, as specifically described in the claims, checks movement of the type carrier. With the construction of the Green patent the movement of the type carrier toward the platen is not affected or checked in any manner by adjustment of the stop 45.

Claims 20 and 21 have been amended to clearly distinguish them from the references of record. While the Lorenz patent No. 1,123,771, includes an adjustable fulcrum for one member of the type carrier actuating toggle, such fulcrum is not a part of the "connections between the key levers and type bars" as described in claim 20, nor is the machine provided with any means for effecting adjustment of such fulcrum; but a separate and independent tool must be employed.

The claim also clearly distinguishes from the structure shown in the patent to Schaff in which the adjustable stop bar for varying the stroke of the key levers is not included in, and forms no part of, "the connections between the key levers and type bars".

Claim 21 as amended clearly distinguishes applicant's invention from the disclosure of the Green patent in which the stop 45, as before noted, only varies the stroke of the key levers, whereas the adjustable means of the claim operates entirely independent of any variation of movement of the key levers.

A reconsideration of claim 17 is requested. As
389 pointed out at the interview this claim very specifically and positively describes that the machine includes "means for rendering inoperative the means for normally checking movement of the type bars," whereas in the construction of the Going patent the stop bar 31 is not adjustable or adapted to the shifted to inoperative position.

Very respectfully,

CUSHMAN BRYANT & DARBY

Attorneys for Applicant.

ALB:W

390 Div. 58 Room 270 Annex JWQ:ERD Paper No. 7

DEPARTMENT OF COMMERCE
United States Patent Office
Washington

February 20, 1929

Please find below a communication from the Examiner in charge of this application.

THOMAS E. ROBERTSON
Commissioner of Patents.

Mailed Feb 20 1929

Applicant: Carl A. Joerissen
Ser. No. 167,734
Filed Feb. 12, 1927
For Typewriting Machine

Cushman, Bryant & Darby,
Loan & Trust Bldg.,
Washington, D. C.

Additional references made of record:—

Rennyson, 403,075, May 7, 1889, (197-25)
Hess, 984,275, Feb. 14, 1911, 197-40
Alexander, 833,281, Oct. 16, 1906, 197-41 x

Claim 1 is thought to be sufficiently general in description of the construction to be met in the patent to Alexander, cited herein, and is rejected.

Claim 1, in the inclusion of means for normally checking the movement of the type carrier prior to its reaching printing position, is thought to present no distinction from part a^2 disclosed in the Alexander patent. It appears that said part a^2 may be adjusted to a position where it does not have a stopping or checking action on a type bar.

A stopping or checking means for a plurality of type bars is disclosed in the patent to Hess, attention being directed to part 7′, shown in Fig. 5 of the drawing of this patent.

Claims 4 and 17 are rejected on either of the patents to Alexander or Hess.

In the construction disclosed in this application, the fulcrum supports 12 are rocked to vary the force with which the type bars will strike the platen.

The newly discovered patent to Rennyson discloses an adjustable toggle fulcrum support I, which appears to accomplish the purpose obtained by rocking said supports 12.

Claim 20 is therefore rejected on the patent to Rennyson.

Attention is also directed to the toggle adjusting
391 screws e of the patent to Rennyson.

The statement, without varying the strokes of the key levers, last line of claim 20, is negative in character and it is suggested that the statement, independently of any variation in the strokes of the key levers, be substituted therefore.

Claim 21 is rejected on either of the patents to Alexander, Hess.

While the construction disclosed in this application is of an entirely different character than that disclosed in the patents to Alexander and Hess, yet it is thought that claims 1, 4, 17 and 21 in terms do not present any distinction from the type bar checking or stopping means disclosed in said patents.

Claim 2 is allowed.

Claims 3, 5 to 19 stand allowed.

JAS. W. QUIGGLE
Actg. Examiner.

J.W.Q.

392 #8

Attorney's Room Apr 6 1929 U. S. Patent Office

Washington, D. C.
March 27, 1929

Hon. Commissioner of Patents,
Washington, D. C.

Sir:

Please permit Watts T. Estabrook to inspect and make copies of my pending application for improvements in Typewriting Machines, filed February 12, 1927, Serial No. 167,734 within a period of thirty days from the date hereof.

CARL A. JOERISSEN

Approved E. F. Dowell

(Here follow photostats marked pages 393 and 394)

#9

ATTORNEY'S ROOM
JUN 20 1929
U.S. PATENT OFFICE

Washington, D. C., June 17, 1929.

Hon. Commissioner of Patents,
Washington, D. C.

Sir:

Please permit Davis & Davis, Washington, D. C., to inspect and make copies of my pending applications for improvements in Typewriting Machines, as follows:

Serial No. 96,602, filed March 22nd, 1926.
Serial No. 167734, filed Feb. 12, 1927.
Serial No. 280,274, filed May 24, 1928.

This permission to extend for a period of thirty days from date hereof.

Respectfully,

(Signed) Carl A. Joerissen.

Filed Drawer

COPY

AUG 8 29

IN THE UNITED STATES PATENT OFFICE

U. S. PATENT OFFICE AUG 9 1929 DIVISION 58

C. A. Joerissen,
TYPEWRITING MACHINE,
Filed February 12, 1927,
Serial No. 167,734 Div. 58.

AUG 9 1929

- - - -

AUG 9 1929

Hon. Commissioner of Patents,
Washington, D. C.

Sir:-

The above entitled application is hereby amended as follows:

IN THE CLAIMS:

Cancel claim 20 and substitute the following:

~~22~~ In a typewriting machine, the combination of a platen, a series of pivotally mounted type bars, a series of key levers, one for each type bar, connections between each key lever and one of the type bars for swinging the bar into printing relation to the platen when the key lever is depressed, and means for simultaneously effecting adjustment of the connections between all of the key levers and associated type bars without varying the stroke of the type bars whereby at will the operator may vary the force with which the type bars will strike the platen independently of any variation in the strokes of the key levers.

REMARKS

An allowance of the application as thus amended is requested.

The claim hereby substituted for former claim 20 is be-

Aug. 8.

U. S. PATENT OFFICE
SEP 27 1929
DIVISION 53

APPLICATION DIV.
SEP 26 29
U.S. PATENT OFFICE

IN THE UNITED STATES PATENT OFFICE

C. A. Joerissen,
TYPEWRITING MACHINES,
Filed Feb. 12, 1927,
Serial No. 167,734.

Elw 58

* * *

September 26, 1929.

Hon. Commissioner of Patents,
Washington, D. C.

Sir:

We hereby authorize and request entry of the following amendment in the above entitled application.

Page 6.

After line 19, insert:

D¹

It will be seen that the parts 16, 19 constitute in effect a second toggle which acts to expand the initially collapsed primary toggle 10, 14 interposed between the type carrier and the fulcrum support 12. Movement of this additional toggle effects expansion of the primary type carrier actuating toggle and assists in the completion of the printing stroke of the type carrier due to rocking of the fulcrum support 12.

Add the following claims:-

D²

~~23. In a typewriting machine, the combination of a platen, a type carrier movable to and from printing relation to the platen, and means for moving the type carrier to printing relation with the platen including a pivotally mounted member, a toggle interposed between the type carrier and said pivotally mounted member, straightening of~~

397

which toggle acts to check movement of the type carrier prior to the latters coming into printing relation with the platen, and a second toggle adapted to expand the first said toggle, completion of the printing movement of the type carrier being completed by rocking said pivoted member.

~~24. In a typewriting machine, the combination of a platen, a type carrier movable to and from printing relation to the platen, and means for moving the type carrier to printing relation with the platen including a pivotally mounted member, and two interconnected toggles, one interposed between and connected with both said pivoted member and the type carrier, and the second said toggle operating to expand the toggle between the pivotally mounted member and the type carrier, the completion of movement of the type carrier into printing relation with the platen being effected by a rocking of the pivotally mounted member.~~

D2

~~25. In a typewriting machine, the combination of a platen, a type carrier movable to and from printing relation to the platen, and means for moving the type carrier to printing relation with the platen including a pivotally mounted member, a toggle having one member connected to said pivotally mounted member and its other member adapted to move the type carrier, and a second toggle adapted to actuate the first said toggle, the completion of movement of the type carrier into printing relation with the platen being effected by a rocking of the pivotally mounted member.~~

Add'y 4

REMARKS

It is believed that applicant is entitled to the foregoing claims in addition to those heretofore presented, as each of them describes a construction and arrangement of

48

parts quite different from any of the reference disclosures.

Respectfully,

Cushman Darby & Cushman
Attorneys for Applicant.

ALB/B

302

395 lieved to be free from the informality noted in the last Official letter, and clearly distinguishes applicant's construction from the disclosure of the Rennyson patent cited.

The structure of the Rennyson patent is a very different mechanism from the typewriter of applicant's invention and such as specifically described in claim 22. The reference structure does not include "*pivotally mounted* type bars" nor "key *levers*" and further there is no means for varying the force with which the type bars will strike the platen "*independently of any variation in the strokes of the key levers*". The adjustment of the "disc I" necessarily involves vertical movement of the "operating-keys K".

A reconsideration of claims 1, 4, 17 and 21 is requested. It is believed that when these claims were rejected upon the disclosures of the patents to Alexander and Hess, an important limitation in each of the claims was overlooked.

As specifically pointed out in each of the claims, applicant's invention includes means for moving the type carriers to printing position, and also means for checking movement of the type carrier "*prior* to its reaching printing position".

The stop a^2 of the machine of the Alexander patent and the "abutment 7′" of the machine of the Hess patent act to positively limit movement of the type bars toward the platen and when the bar contacts with either of such stops the type head is in printing position.

This is quite a different construction from the feature of applicant's invention referred to in the rejected claims by which movement of the type bar is checked "*prior* to its reaching printing position" for a purpose which is quite foreign to anything contemplated or suggested in the references.

Therefore, it is thought that upon further con-
396 sideration the patents to Alexander and Hess will be withdrawn and the application found in condition for allowance.

Very respectfully,

CUSHMAN BRYANT & DARBY

Attorneys for Applicant

ALB:L

(Here follow photostats marked pages 397 to 399)

400 Div. 58 Room 270 Annex LMB:ERD Paper No. 12

DEPARTMENT OF COMMERCE
United States Patent Office
Washington

July 30, 1930

Mailed Jul 30 1930

Please find below a communication from the Examiner in charge of this application.

THOMAS E. ROBERTSON
Commissioner of Patents.

Applicant: Carl A. Joerissen
Ser. No. 167,734
Filed Feb. 12, 1927
For Typewriting Machine

Cushman, Bryant & Darby,
Loan & Trust Bldg.,
Washington, D. C.

Responsive to amendments filed Aug. 8, 1929 and Sept. 26, 1929.

Cam 50 in Fig. 6 has only three notches whereas in Fig. 7 four such notches are provided, and it is thought that the showing should be uniform.

The front end of lever 10 is, in Figs. 1, 6 and 7, disposed above and to the right of rod 51, while the other figures show it below and to the left, and it is not believed that the construction as illustrated can be operated.

Page 10, line 17, "returned" should be *turned.*

Claims 1, 4, 17 and 21 are objected to because of the overlapping of elements. In claims 1 and 4, "means controlled by the actuation of the key lever for moving the type bar", etc., and in claims 17 and 21, "connections between each lever and one of the type bars", etc., include the subsequently defined separate "means for checking movement", etc.

The rejections of claims 1, 4, 17 and 21 on the references is repeated. These claims do not include lever 21 and link 20 whereby printing is effected after the checking of the

305

1

A+ 2 drawings 13 E

5119

APPLICATION JAN -9 U.S. PATENT OFFICE

U. S. PATENT OFFICE JAN 10 1931 DIVISION 58

IN THE UNITED STATES PATENT OFFICE

C. A. Joerissen,

TYPEWRITING MACHINES,

Filed February 12, 1927,

Serial No. 167,734. Div. 58.

January 7, 1931

Hon. Commissioner of Patents,

Washington, D. C.

Sir:-

Supplementing an interview kindly granted applicant's attorney by the Principal Examiner, and in accordance with the understanding reached at such interview, the above entitled application is hereby amended in response to the Official action of July 30, 1930 as follows:

IN THE DRAWINGS:

Cancel the present drawings and substitute the two sheets filed herewith.

IN THE SPECIFICATION:

Page 3.

Cancel lines 13 to 27 inclusive, and substitute the following:

Figure 1 is a diagrammatic view of portions of a typewriting machine embodying the present invention, the type bar being shown in its position of rest.

Figure 2 is a similar view showing the parts in a slightly different relation.

Over

167734 52

402

Figure 3 is a similar view showing the type bar in printing position.

Figure 4 is a view similar to Figure 3 with the means for normally checking movement of the type carrier to printing relation rendered inoperative.

Page 5.

Line 1, cancel "7 and".

Page 6.

Lines 10 and 11, cancel "in Figures 1 to 5".

Line 21, cancel "in Figures 1 to 3 inclusive,"

Cancel beginning with line 16 of page 8, to and including line 10 of page 9.

Page 10.

Line 7, change "7" to --4--

Line 8, change "7" to --4--

Line 16, change "6" to --1-- and "7" to --4--

Line 17, change "returned" to --turned--

Cancel beginning with line 24 of page 10, to and including page 11.

IN THE CLAIMS:

Claim 1.

Line 6, cancel "means" and substitute --including devices--

Line 8, change "means" (second occurrence) to --devices--

Claim 4.

Line 6, cancel "means" and substitute --and including devices--

Line 8, change "means" (second occurrence) to --devices--

Claim 17.

Line 7, cancel "means" and substitute --and including devices--

Line 10, change "means" to --devices--

Claim 21.

Line 7, after "bars" insert --effected by said connections--

Line 8, before "reaching" insert --the bar--

Line 9, after "or" insert --the bar--

Claim 22.

Line 7, after "between" insert --all of--

Line 8, place a comma after "bars" and thereafter insert --without moving the type bars--

R E M A R K S

An allowance of the application as hereby amended is respectfully requested.

In the new drawings, which at the interview referred to the Examiner agreed could be substituted for the originals, the obvious draftsman's error in the latter has been corrected.

As pointed out at the interview referred to, the error in view of which the disclosure was apparently inoperative, was due simply to the draftsman's error in proportioning or locating the rod 51 relative to the lever 10.

Claims 1, 4, 17, 21 and 22 have been amended so that each of them will be free from the informality noted in the Official letter, and as before pointed out, each of such claims clearly describes a construction and arrangement of parts that distinguishes applicant's improvements

308

movement of the type bar, and therefore they read
401 on the references which show means which may be adjusted to check the type bar prior to its reaching printing position.

Claim 22 is not considered to be patentable over Rennyson. Adjustment of disk I simultaneously adjusts the connections whereby the force with which the type bars strike the platen may be varied independently of any variation in the pressure applied to the key bars.

Claims 23, 24 and 25 are not submitted as required by the Commissioner's Order No. 2801 of Feb. 20, 1923. Applicant must point out wherein the claims distinguish over the references.

In view of the inoperativeness of the apparatus due to the interference of rod 51 with the movement of the type bar actuating lever 10, the claims are all rejected as being drawn to an inoperative device.

E. F. DOWELL
Examiner.

LMB

(Here follow photostats marked pages 402 to 404)

405 from the patents to Alexander and Hess, on which they were rejected.

Regarding claim 21, it is noted that the claim includes, in addition to "connections between each lever and one of the type bars for swinging the type bar into printing relation to the platen", a "means adjustible by an operator", specifically the parts 50, 53, of which there is no counterpart in the structures of the patents to Alexander or Hess.

Claim 22 has been amended so that it willl clearly distinguish applicant's improvements from the disclosure of the Rennyson patent. With the reference structure, movement of the disc I, such as referred to in the Official letter, necessarily moves the type bars, whereas movement of the means described in applicant's claims, does not effect movement of such parts.

In reply to the criticism of claims 23 to 25, inclusive, applicant respectfully submits that none of the patents of record shows a construction in which the connections be-

tween the type carrier and key include two toggles related as specifically defined in these claims.

Respectfully,

CUSHMAN BRYANT & DARBY
Attorneys for Applicant

ALB:L

406 14/F

Application Div. Jan 16 31 U. S. Patent Office

U. S. Patent Office Jan 17 1931 Division 58

In the United States Patent Office

C. A. Joerissen,
TYPEWRITING MACHINES,
Filed February 12, 1927,
Serial No. 167,734. Div. 58.

* * *

January 16, 1931

Hon. Commissioner of Patents,
Washington, D. C.

Sir:

It is requested that the following amendment be entered in the above entitled application:

IN THE SPECIFICATION

Page 5

Line 1 after ribbon insert—*positioned adjacent*—.

Respectfully,

CUSHMAN, BRYANT & DARBY
Attorneys.

ALB:U

16
5123

APPLICATION DIV.
DEC - 9 31
U.S. PATENT OFFICE

IN THE UNITED STATES PATENT OFFICE

Carl A. Joerissen

TYPEWRITING MACHINE

Filed February 12, 1927

Serial No. 167,734 Div. 58.

* * *

December 8, 1931

Hon. Commissioner of Patents,
Washington, D. C.

Sir:

Responsive to the Official Letter of August 25, 1931, kindly amend as follows:

IN THE SPECIFICATION

Page 5.

Line 4 from the bottom, add the following:

It will be seen that that portion of member 12 between the pivots 11 and 13 constitutes a link portion swingable in a downward and rearward direction to complete the stroke of the type bar through the toggle 10, 14. The free end or tail portion of member 12, being of some weight assists in the carry through of the link portion.

IN THE CLAIMS

Cancel claims 23 to 25 and add the following claims:

~~26. In a typewriter, a type~~ bar pivoted for an upward and rearward operative swing, a toggle comprising two pivotally connected members of which one has a pivotal connection with the type bar, a swingable link portion having a pivotal connection with the other of said toggle members, said link portion having a downward and rearward operative swing, a key bar operable to move the toggle members from a normally collapsed downwardly extending position to a relatively straightened position and to impart to the type bar a terminally checked throw to a position slightly in advance of striking position, and means thereupon effective to operatively swing said link portion to complete the stroke of the type bar through said toggle.

Cancelled

~~27. In a typewriter,~~ a type bar pivoted for an upward and rearward operative swing, a toggle comprising two pivotally connected members of which one has a pivotal connection with the type bar, a swingable link portion having a pivotal connection with the other of said toggle members, said link portion ~~having a downward and rearward operative swing,~~ being swingable downwardly from its normal position of rest and rearwardly, a key bar operable to move the toggle members from a normally collapsed downwardly extending position to a relatively straightened position and ~~thereby~~ to impart to the type bar through the toggle members a terminally checked throw to a position slightly in advance of striking position, and means thereupon effective to operatively swing said link portion to complete the stroke of the type bar through said toggle.

G Z over

Cancelled

5125

~~28. In a typewriter, a type bar pivoted for an upward and rearward operative stroke, a toggle comprising two pivotally connected members of which one has a pivotal connection with the type bar, a swingable link portion having a pivotal connection with the other of said toggle members, said link portion having a downward and rearward operative swing, a key bar having a connection with said toggle and operable to move the toggle members from a normally collapsed downwardly extending position to a relatively straightened position to impart to the type bar a terminally checked throw to a position slightly in advance of striking position, and means external of said connection thereupon effective to swing said link portion to complete the stroke of the type bar through said toggle.~~

Per I

~~29.~~ 28. In a typewriter, a type bar pivoted for an upward and rearward operative stroke, a toggle comprising two pivotally connected members of which one has a pivotal connection with the type bar, a swingable link portion having a pivotal connection with the other of said toggle members, said link portion being swingable downwardly from its normal position of rest and rearward ~~having a downward and rearward operative swing~~, a key bar having a connection with said toggle and operable to move the toggle members from a normally collapsed downwardly extending position to a relatively straightened position and ~~thereby~~ to impart to the type bar through the toggle members a terminally checked throw to a position slightly in advance of striking position, and means external of said connection thereupon effective to swing said link portion to complete the stroke of the type bar through said toggle.

Sig

-3-

~~30. In a typewriter, a type bar~~ pivoted for an upward and rearward operative swing, a toggle comprising two pivotally connected members of which one has a pivotal connection with the type bar, a swingable link portion having a pivotal connection with the other of said toggle members, said link portion having a downward and rearward operative swing, a key bar operable to move the toggle members from a normally collapsed downwardly extending position to a relatively straightened position and to impart to the type bar a terminally checked throw to a position slightly in advance of striking position, means thereupon effective to operatively swing said link portion to complete the stroke of the type bar through said toggle, and power-storing means tending to restore said link portion.

~~31. In a typewriter~~, a type bar pivoted for an upward and rearward operative stroke, a toggle comprising two pivotally connected members of which one has a pivotal connection with the type bar, a swingable link portion having a pivotal connection with the all of said wood members, said link portion having a downward and rearward operative swing, a key bar having a connection with said toggle and operable to move the toggle members from a normally collapsed downwardly extending position to a relatively straightened position to impart to the type bar a terminally checked throw to a position slightly in advance of striking position, means external of said connection thereupon effective to swing said link portion to complete the stroke of the type bar through said toggle, and power-storing means tending to restore said link portion.--

Cancel

R E M A R K S

An important feature of applicant's mechanism is the member 12 which has a downward and rearward swing for the purpose of completing the stroke of the type bar through the toggle,

407 Div. 58 Room 270 Annex LMB:ERD Paper No. 15

DEPARTMENT OF COMMERCE
United States Patent Office
Washington

Mailed Aug 25 1931

August 25, 1931

Please find below a communication from the Examiner in charge of this application.

THOMAS E. ROBERTSON
Commissioner of Patents.

Applicant: Carl A. Joerissen
Ser. No. 167,734
Filed Feb. 12, 1927
For Typewriting Machine

Cushman, Bryant & Darby,
Loan & Trust Bldg.,
Washington, D. C.

Responsive to amendments filed Jan. 9, 1931 and Jan. 16, 1931.

Additional reference:

Roberts, 1,214,371, Jan. 30, 1917, (197-30)

Claims 23, 24 and 25 are rejected on Roberts, above cited, wherein is shown a pivoted member 8 connected by a toggle with the type bar, a second toggle (4) to straighten the first toggle and wherein the rocking of the pivoted member completes the printing operation.

The other claims appear to be allowable as at present advised.

E. F. DOWELL
Examiner.

LMB

(Here follow photostats marked pages 408 to 411)

412 the word "rearward" being used as meaning toward the rear of the machine.

That portion of member 12 between the pivot points 11 and 13 constitutes a swingable link portion to which the toggle element 10 is pivotally connected and this portion has been specifically recited in the newly added claims as having a downward and rearward swing for the purpose of completing the type bar stroke through the toggle.

Note that according to claim 26 the original movement of the type bar is not necessarily effected through the toggle. Movement of the key bar might be effected through means such as the lever 6 of applicant's copending application Ser. No. 96,602, filed March 22, 1926 and allowed July 22, 1930. For this reason the claim also reads on the last mentioned application and the claim, if found allowable, should be transferred thereto. Since the final fee becomes due in Ser. No. 96,602 on January 22nd, 1932, it is hoped that an early action may be had on claim 26 so that it may be transferred to Ser. No. 96,602 before the final fee has to be paid.

So far as applicant is aware the prior art disclosure closest to the subject matter of claim 26 is found in patent 1,471,153, Going, Oct. 16, 1923. According to Going, however, the toggle 26, 30 when collapsed projects upwardly and the member 18, 19 has an upward throw. Consequently, as can be seen in Figure 1, with the parts in normal position, the toggle projects upwardly above the platen and in final position, Figure 3, the weight 19 is in obscuring relation to a portion of the platen. Furthermore, the key lever upon depression not only has to overcome the inertia of the weight 19, but has to move this weight upwardly. According to applicant's construction, the free end of member 12 is so poised for downward motion as to act with the operating force exerted on lever 21. Note that while link
413 portion 18 of Going may pass somewhat past the vertical, as in Figure 3, it is always being moved upwardly until the vertical position is reached.

As over Going, therefore, applicant has presented a very compact arrangement and one which requires minimum amount of operating force.

Claim 27 defines over 26 in specifying that by moving the toggle members to a relatively straigntened position the type bar is *thereby* moved through the first part of its stroke. In other words, this claim, as distinguished from

26, contemplates a key lever acting on the type bar through the toggle. This claim is, therefore, specific to the disclosure of the present application.

Claim 28 specifies a key bar *having a connection with the toggle,* the key bar being operable to relatively straighten the toggle members and to move the type bar. The claim specifies means *external of said connection* to complete the type bar movement. The last named means according to the present application includes the elements 20, 21. This claim also reads on Serial No. 96,602 wherein the link 16 would be the last named means, the specified "connection" including lever 6. Claim 29 distinguishes over 28 as 27 over 26.

Claim 30 distinguishes over 26 in the recitation of power storing means, namely spring 30, tending to restore the link portion. Claim 31 distinguishes by the same recitation over claim 28.

For the reasons given, the claims are all considered to define patentably over the prior art known to applicant, and in view of the circumstances mentioned, it is hoped that an early action may be had.

Respectfully,

CUSHMAN, BRYANT, DARBY & CUSHMAN
Attorneys for Applicant.

GFF:MW

414 16/G

Application Div. Dec—9 31 U. S. Patent Office

U. S. Patent Office Dec 10 1931 Division 58

Applicant: Carl A. Joerissen
Invention: Typewriting Machine
Filed: February 12, 1927
Ser. No. 167,734

Hon. Commissioner of Patents,

Sir:

We hereby substitute as attorneys in the above named case, Messrs. Cushman, Bryant, Darby & Cushman, a firm composed of Arlon V. Cushman, Arthur L. Bryant, John

J. Darby and William M. Cushman (Reg. No. 7196), American Security Building, Washington, D. C.

Respectfully,

CUSHMAN, BRYANT & DARBY

December 9 1931

415 17/H

Application Div. Dec 16 31 U. S. Patent Office

U. S. Patent Office Dec 17 1931 Division 58

In the United States Patent Office

Carl A. Joerissen
TYPEWRITING MACHINE
Filed February 12, 1927
Serial No. 167,734. Div. 58.

* * *

December 15, 1931

Hon. Commissioner of Patents,
Washington, D. C.

Sir:

Supplemental to the amendment of December 8th in the above application, kindly amend claim 31 by adding at the end of line 4—a pivotal connection with the other of said toggle members,—.

Remarks

The above amendment is made merely for the purpose of correcting an obvious omission.

Respectfully,

CUSHMAN, BRYANT, DARBY & CUSHMAN
Attorneys for Applicant.

GFF:MW

(Here follow photostats marked pages 416 and 417)

18

U. S. PATENT OFFICE
FEB 8 1932
DIVISION 38

IN THE UNITED STATES PATENT OFFICE

Carl A. Joerissen,
TYPEWRITING MACHINES,
Filed February 12, 1927,
Serial No. 167,734.

- - -

February 4, 1932

Hon. Commissioner of Patents,
Washington, D. C.

Sir:-

Kindly amend the above application as follows:

IN THE CLAIMS:

Cancel claims 26, 28, 30 and 31.

Claim 27.

Cancel line 6 and substitute --said link portion being swingable downwardly from its normal position of rest and rearwardly,--

Line 9, cancel "thereby" and after "bar" insert --through the toggle members--

Claim 29.

Beginning line 6, cancel through to the comma, line 7, and substitute --said link portion being swingable downwardly from its normal position of rest and rearwardly--

Line 10, cancel "thereby" and after "bar" insert --through the toggle members--

R E M A R K S

Claims 26, 28, 30 and 31 have been cancelled in view of their transfer to applicant's earlier application Serial No. 96,602.

Claims 27 and 29 have been amended in line 6 to bring them into conformity with the transferred claims as allowed in Serial No. 96,602.

The distinction of claims 27 and 29 over claims 26 and 28 lies in the limitation that the initial swing of the type bar is imparted by the toggle members. Lines 9 and 10 of claims 27 and 29, respectively, have been amended to bring out this idea more clearly, the patentable merit of the claims being unaffected. It is hoped that allowance may now follow.

Respectfully,

Cushman Bryant Darby & Cushman

Attorneys for Applicant

GFF:L

MAR 15 1932

U.S. PATENT OFFICE
MAR 21 1932
DIVISION 58

IN THE UNITED STATES PATENT OFFICE

Carl A. Joerissen,
TYPEWRITING MACHINES,
Filed February 12, 1927,
Serial No. 167,734 Div. 58.

* * *

March 15, 1932

Hon. Commissioner of Patents,
Washington, D. C.

Sir:

Responsive to the Official Letter of March 12, 1932, kindly amend as follows:

IN THE SPECIFICATION

Page 2.

Line 5, after the period add --The invention represents, in part, a development along lines generically covered in United States patent 1,846,339, issued to me February 23, 1932.--

IN THE CLAIMS

Cancel claim 27.

R E M A R K S

Since the above amendments place the application in condition for allowance, it is hoped that immediate action may be had, since it is desired to secure issuance of the patent at as early a date as possible.

Respectfully,

Cushman, Darby & Cushman
Attorneys for Applicant.

GFF:MW

418 Div. 58 Room 5608 260 S/fmc Paper No. 19

DEPARTMENT OF COMMERCE
United States Patent Office
Washington

March 12, 1932

Please find below a communication from the Examiner in charge of this application.

THOMAS E. ROBERTSON
Commissioner of Patents.

Applicant: C. A. Joerissen
Ser. No. 167,734
Filed Feb. 12, 1927
For Typewriting Machine

Mailed Mar 12 1932

Cushman, Bryant, Darby & Cushman,
American Security Bldg.,
City.

Additional reference:

Joerissen 1,846,339 Feb. 23, 1932 197-25

It is required that reference be made in the specification to Patent Number 1,846,339 (application number 96,602) in accordance with Rule 43 of the Rules of Practice.

Claim 27 is rejected on the patent to Joerissen 1,846,339 and also as being functional in lines 7 to 9 inclusive. The claim does not include parts 15, 16 and 19 which are necessary to form an operative connection between the key bar and toggle whereby the key may move the type bar through the toggle. The claim defines no structure not shown in the patent and merely distinguishes from the patent by a functional statement. In other words, in this claim applicant has set forth the key bar without including the means for connecting the key bar directly to either the type bar or the toggle, and has bridged the gap with a functional statement.

Claims 1 to 19 inclusive, 21, 22 and 29 are allowable as at present advised.

E. F. DOWELL
Examiner

L.M.S.

420 Div 58 (1G) 181 Serial No. 167,734

DEPARTMENT OF COMMERCE
United States Patent Office
Washington

MARCH TWENTY EIGHT, 1932

Carl A. Joerissen,

Your APPLICATION for a patent for an IMPROVEMENT in

TYPEWRITING MACHINE

filed Feb 12, 1927 has been examined and ALLOWED with 22 claims.

The final fee, TWENTY-FIVE DOLLARS, WITH $1 ADDITIONAL FOR EACH CLAIM ALLOWED IN EXCESS OF 20, must be paid not later than SIX MONTHS from the date of this present notice of allowance. If the final fee be not paid within that period, the patent will be withheld, but the application may be renewed within one year after the date of the original notice with a renewal fee of $25 and $1 additional for each claim in excess of 20.

The office delivers patents upon the day of their date, on which date their term begins to run. The preparation of the patent for final signing and sealing will require about four weeks, and such work will not be begun until after payment of the necessary final fee.

When the final fee is paid, there should also be sent, DISTINCTLY AND PLAINLY WRITTEN, the name of the INVENTOR, TITLE OF THE INVENTION, AND SERIAL NUMBER AS ABOVE GIVEN, DATE OF ALLOWANCE (which is the date of this circular), DATE OF FILING, and, if assigned, the NAMES OF THE ASSIGNEES.

If it is desired to have the patent issue to an ASSIGNEE OR ASSIGNEES, an assignment containing a REQUEST to that effect, together with the FEE for recording the same, must be filed in this office on or before the date of payment of the final fee.

After issue of the patent, uncertified copies of the drawings and specifications may be purchased at the price of TEN CENTS EACH. The money should accompany the order. Postage stamps will not be received.

The final fee will NOT be received from other than the applicant, his assignee or attorney, or a party in interest as shown by the records of the Patent Office.

NOTICE.—WHEN THE NUMBER OF CLAIMS ALLOWED IS IN EXCESS OF 20, NO SUM LESS THAN $25 PLUS $1 ADDITIONAL FOR EACH CLAIM IN EXCESS OF TWENTY CAN BE ACCEPTED AS THE FINAL FEE.

IN REMITTING THE FINAL FEE GIVE THE SERIAL NUMBER AT THE HEAD OF THIS NOTICE.

UNCERTIFIED CHECKS WILL NOT BE ACCEPTED.

Respectfully,

THOMAS E. ROBERTSON
Commissioner of Patents.

CUSHMAN BRYANT AND DARBY AND CUSMAN,
American Security Building,
Washington, D. C.

421 Mail Division Apr—2 32 U. S. Patent Office

Final Fee Paid to the Commissioner of Patents

(Be careful to give correct Serial No.)

Serial No. 167,734
Inventor: Carl A. Joerissen
Patent to be Issued to As per record
Name of Invention, as Allowed: Typewriting Machine
Date of Payment: April 2, 1932
Fee: Final 22 cls.
Date of Filing: Feb. 12, 1927
Date of Circular of Allowance: March 28, 1932

The Commissioner of Patents will please apply the accompanying fee as indicated above.

CUSHMAN, BRYANT, DARBY & CUSHMAN
Attorney.

Send Patent to Attorneys

Final fees will not be received from other than the applicant, his assignee or attorney, or a party in interest as shown by the records of the Patent Office.

422 Paper 21

Application Division Apr—2 32 U. S. Patent Office

U. S. Patent Office Apr 4—1932 Issue Division

Supplemental Oath

Carl A. Joerissen,
TYPEWRITING MACHINE,
Filed February 12, 1927,
Serial No. 167,734,
Allowed March 28, 1932.

COUNTY OF UNION,
State of New Jersey, ss:

Carl A. Joerissen, whose application for Letters Patent for Improvements in TYPEWRITING MACHINE, was filed February 12, 1927, Serial No. 167,734, and allowed March 28, 1932, being duly sworn, deposes and says that the subject matter of the allowed claims hereinafter appearing was part of his invention, was invented before he filed his original application, above identified for such invention, was not known or used before his invention, was not patented or described in a printed publication in any country more than two years before his application, was not patented in a foreign country on an application filed by him or his legal representatives or assigns more than twelve months before his application, was not in public use or on sale in this country for more than two years before the date of his application, and has not been abandoned.

1. In a typewriting machine, the combination of a platen, a type carrier movable to and from printing relation to the platen, a key lever, means controlled by actuation of the key lever for positively moving the type carrier to printing position, including devices for normally checking such movement of the type carrier prior to its reaching printing position, and means for rendering said checking devices inoperative to check such movement.

2. In a typewriting machine, the combination of a
423 platen, a type carrier movable to and from printing relation to the platen, a key lever, means controlled by actuation of the key lever for effecting initial movement of the type carrier toward the platen, means for normally

checking such movement of the type carrier, means actuated by movement of the key lever for effecting completion of the movement of the type carrier to printing relation to the platen, and means for rendering said checking means inoperative to check such movement.

3. In a typewriting machine, the combination of a platen, a plurality of type carriers each movable to and from printing relation to the platen, a key lever associated with each type carrier, means controlled by actuation of each key lever for positively moving the associated type carrier to printing position, means for normally checking such movement of each type carrier prior to its reaching printing position, and means for rendering all of said checking means inoperative.

4. In a typewriting machine, the combination of a platen, a type bar mounted to swing upward and rearward into printing relation to the platen, a key lever, means controlled by actuation of the key lever for moving the type bar to printing position, and including devices for normally checking such movement of the type bar prior to its reaching printing position, and means for rendering said checking devices inoperative to check such movement.

5. In a typewriting machine, the combination of a platen, a type carrier movable to and from printing relation to the platen, a key lever, means controlled by actuation of the key lever for effecting movement of the type carrier to printing position, means for checking such movement of the type carrier prior to its reaching printing position, including a pivotally mounted member connected to the type carrier, and means for adjusting said pivotally mounted member to render said checking means inoperative.

6. In a typewriting machine, the combination of a platen, a pivotally mounted type bar adapted to swing upward and rearward into printing relation to the platen, a key lever, means controlled by the key lever for positively moving the type bar to printing position, means for normally checking such movement of the type bar prior to its reaching printing position including a pivotally mounted member connected to the type bar, and means for adjusting said pivotally mounted member about its axis to render the checking means inoperative.

7. In a typewriting machine, the combination of a
424 platen, a type carrier movable to and from printing relation to the platen, a key lever, connections between the key lever and the type carrier including means for checking movement of the carrier toward the platen prior to its reaching printing position and comprising a lever having one end connected with the type carrier, a pivotally mounted support for the last said lever, and means normally holding said fulcrum support stationary, and being automatically released to permit movement of the fulcrum support with the lever to carry the type carrier to printing position.

8. In a typewriting machine, the combination of a platen, a type carrier movable to and from printing relation to the platen, a key lever, connections between the key lever and the type carrier including means for checking movement of the carrier toward the platen prior to its reaching printing position and comprising a lever having one end connected with the type carrier, a pivotally mounted support for the last said lever, and a pawl engaging the fulcrum support and normally holding it stationary, the tail of the pawl extending into the path of movement of the last said lever, whereby the fulcrum support will be automatically released and permitted to move with said lever to carry the type carrier to printing position.

9. In a typewriting machine, the combination of a platen, a type carrier movable to and from printing relation to the platen, a key lever, connections between the key lever and the type carrier including means for checking movement of the carrier toward the platen prior to its reaching printing position and comprising a lever having one end connected with the type carrier, a pivotally mounted support for the last said lever, means normally holding said fulcrum support stationary, and being automatically released to permit movement of the fulcrum support with the lever fulcrumed thereon to carry the type carrier to printing position, and manually adjustable means for rendering said holding means inoperative.

10. In a typewriting machine, the combination of a platen, a type carrier movable to and from printing relation to the platen, a key lever, connections between the key lever

and the type carrier including means for checking movement of the carrier toward the platen prior to its reaching printing position and comprising a lever fulcrumed at an intermediate point in its length, a pivotally mounted fulcrum support for the last said lever, means normally holding said fulcrum support stationary, and being automatically released by the lever fulcrumed on said fulcrum support as the movement of the type carrier is checked, and means for rocking the fulcrum support about its axis to effect completion of the movement to printing position of the type carrier.

11. In a typewriting machine, the combination of a
425 platen, a type carrier movable to and from printing relation to the platen, a key lever, connections between the key lever and the type carrier including means for checking movement of the carrier toward the platen prior to its reaching printing position and comprising a lever fulcrumed at an intermediate point in its length, a pivotally mounted fulcrum support for the last said lever, means normally holding said fulcrum support stationary, and being automatically released by the lever fulcrumed on said fulcrum support as the movement of the type carrier is checked, and supplemental means including a member for rocking the said fulcrum support to effect completion of the movement to printing position of the type carrier.

12. In a typewriting machine, the combination of a platen, a type carrier movable to and from printing relation to the platen, a key lever, connections between the key lever and the type carrier including means for checking movement of the carrier toward the platen prior to its reaching printing position and comprising a lever fulcrumed at an intermediate point in its length, a pivotally mounted fulcrum support for the last said lever, and means including a member extending beneath the key lever for positively rocking said fulcrum support to effect completion of the movement to printing position of the type carrier.

13. In a typewriting machine, the combination of a platen, a type bar movable to and from printing relation to the platen, a key lever, connections between the key lever and the type bar including means for checking movement of the carrier toward the platen prior to its reaching printing position and comprising a lever fulcrumed at an inter-

mediate point in its length, a pivotally mounted fulcrum support for the last said lever, a pivotally mounted member extending beneath the key lever and adapted to be rocked thereby, and means for transmitting movement of said member to the pivotally mounted fulcrum support to bodily rock the latter and effect completion of the movement of the type bar to printing position.

14. In a typewriting machine, the combination of a platen, a type carrier movable to and from printing relation to the platen, a key lever, connections between the key lever and the type carrier including means for checking movement of the carrier toward the platen prior to its reaching printing position and comprising a lever having one end connected with the type carrier, a pivotally mounted support for the last said lever, and manually operable means for bodily rocking said fulcrum support to render the checking means inoperative.

15. In a typewriting machine, the combination of
426 a platen, a type carrier movable to and from printing relation to the platen, a key lever, connections between the key lever and the type carrier including means for checking movement of the carrier toward the platen prior to its reaching printing position and comprising a lever having one end connected with the type carrier, a pivotally mounted support for the last said lever, means normally holding said fulcrum support stationary, and manually operable means for bodily rocking said fulcrum support to render the checking means inoperative.

16. In a typewriting machine, the combination of a platen, a type carrier movable to and from printing relation to the platen, a key lever, connections between the key lever and the type carrier including means for checking movement of the carrier toward the platen prior to its reaching printing position and comprising a lever having one end connected with the type carrier, a pivotally mounted support for the last said lever, manually operable means for bodily rocking said fulcrum support to render the checking means inoperative, and means for retaining the fulcrum support in such adjusted position.

17. In a typewriting machine, the combination of a platen, a series of pivotally mounted type bars which normally lie

in a substantially horizontal position, a series of key levers, one for each type bar, connections between each lever and one of the type bars for swinging the type bar into printing relation to the platen when the key lever is actuated, and including devices for checking movement of each type bar prior to its coming into printing relation with the platen, and means for rendering inoperative the devices for normally checking movement of the type bars to printing relation with the platen.

18. In a typewriting machine, the combination of a platen, a series of pivotally mounted type bars which normally lie in a substantially horizontal position, a series of key levers, one for each type bar, connections between each lever and one of the type bars for swinging the type bar into printing relation to the platen when the key lever is actuated, and including means for checking movement of the type bar prior to its coming into printing relation to the platen, a rock shaft extending longitudinally of the platen above the key levers, and devices on said shaft for rendering all of said checking means inoperative when said shaft is rocked.

19. In a typewriting machine, the combination of a platen, a type carrier movable to and from printing relation to the platen, a key lever, means controlled by actuation of the key lever for positively moving the type carrier to printing position, and including means for normally checking such movement of the type carrier prior to its reaching printing position, and means for rendering said checking means inoperative.

427

20. In a typewriting machine, the combination of a platen, a series of pivotally mounted type bars, a series of key levers, one for each type bar, connections between each lever and one of the type bars for swinging the type bar into printing relation to the platen when the key lever is depressed, and means adjustable by an operator whereby the movement of the type bars effected by said connections may be checked prior to the bar reaching printing relation to the platen or the bar permitted to swing uninterruptedly from inactive position to printing relation to the platen independent of any variation in the length of movement of the key levers.

21. In a typewriting machine, the combination of a platen, a series of pivotally mounted type bars, a series of key levers, one for each type bar, connections between each key lever and one of the type bars for swinging the bar into printing relation to the platen when the key lever is depressed, and means for simultaneously effecting adjustment of the connections between all of the key levers and associated type bars, without moving the type bars whereby at will the operator may vary the force with which the type bars will strike the platen independently of any variation in the strokes of the key levers.

22. In a typewriter, a type bar pivoted for an upward and rearward operative stroke, a toggle comprising two pivotally connected members of which one has a pivotal connection with the type bar, a swingable link portion having a pivotal connection with the other of said toggle members, said link portion being swingable downwardly from its normal position of rest and rearwardly, a key bar having a connection with said toggle and operable to move the toggle members from a normally collapsed downwardly extending position to a relatively straightened position and to impart to the type bar through the toggle members a terminally checked throw to a position slightly in advance of striking position, and means external of said connection thereupon effective to swing said link portion to complete the stroke of the type bar through said toggle.

CARL A. JOERISSEN

Subscribed and sworn to before me, this 1st day of April, 1932.

LILLIAN M. HINKELDEY

(Seal) *Notary Public, New Jersey.*

Commission expires June 12th, 1936.

(Here follow photostats marked 435 to 786)

8

421

197
25.

1927

CONTENTS:

1. Application	4 papers.	26.	
2. Rejection	JUN 21 1927	27.	
3. Amendment	a DEC 17 1927	28.	
4. Rejection	MAY 14 1928	29.	
5. Letter to Draftsman	May 18, 1928	30.	
6. Amendment	B OCT 22 1928	31.	
7. Rejection	FEB 20 1929	32.	
8. Power Inspect	Apr 6 1929	33.	
9. Power Inspect	June 20, 1929	34.	
10. Amendment	C AUG 8 - 1929	35.	
11. Amendment	D SEP 26 1929	36.	
12. Rej	JUL 30 1930	37.	
13. Amendment	E JAN 9 - 1931	38.	
14. Amendment	F JAN 16 1931	39.	
15. Rej	AUG 25 1931	40.	
16. Amendment	G DEC 9 - 1931	41.	
17. Amendment	H DEC 16 1931	42.	
18. Amendment	I FEB 5 - 1932	43.	
19. Rejection	MAR 12 1932	44.	
20. Amendment	J MAR 19 1932	45.	
21. Oath Apr 2 1932		46.	
22.		47.	
23.		48.	
24.		49.	
25.		50.	

28

435

Return to Abandoned Files.

167734

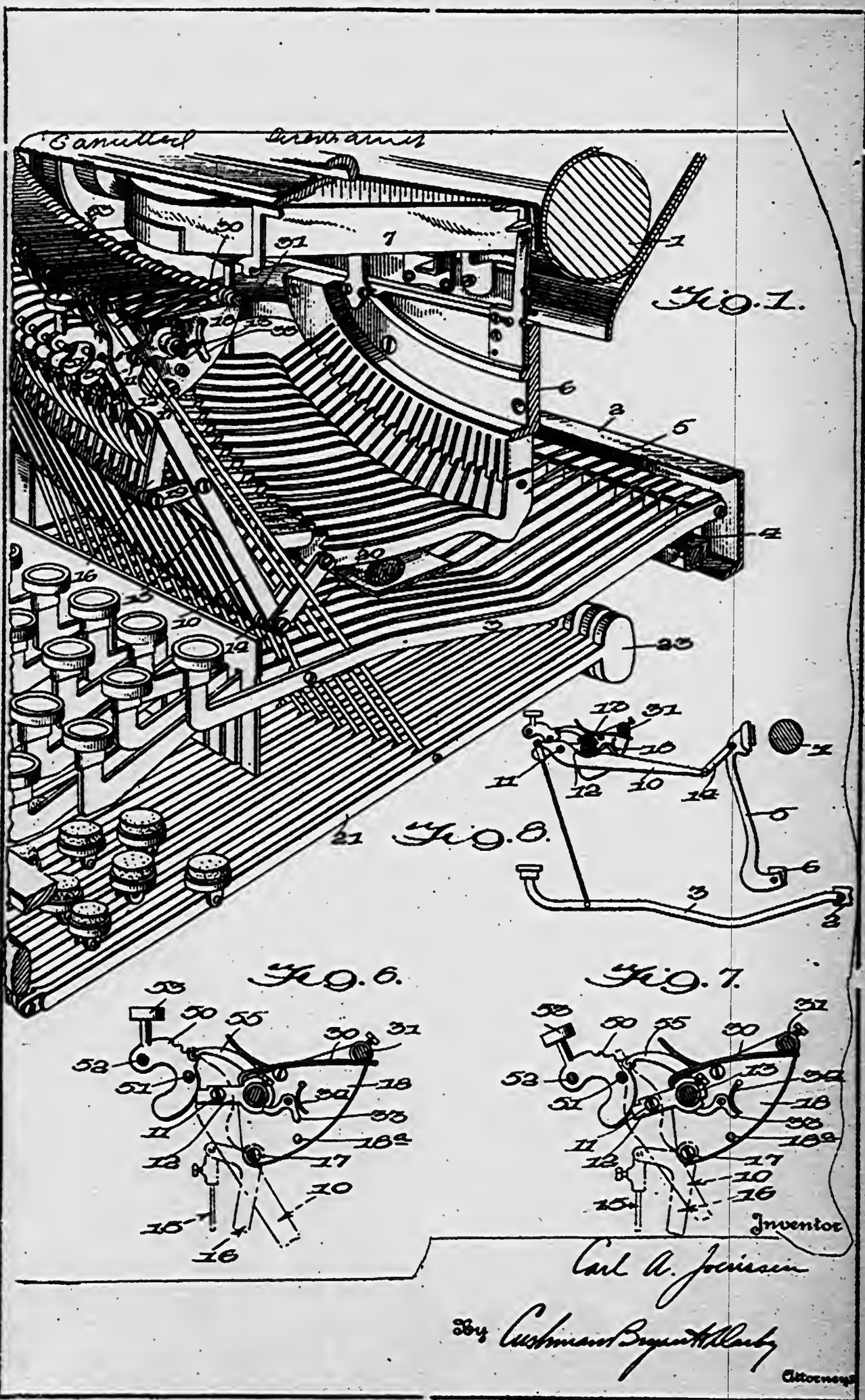

167734

167734

3

Cancelled to Johnson

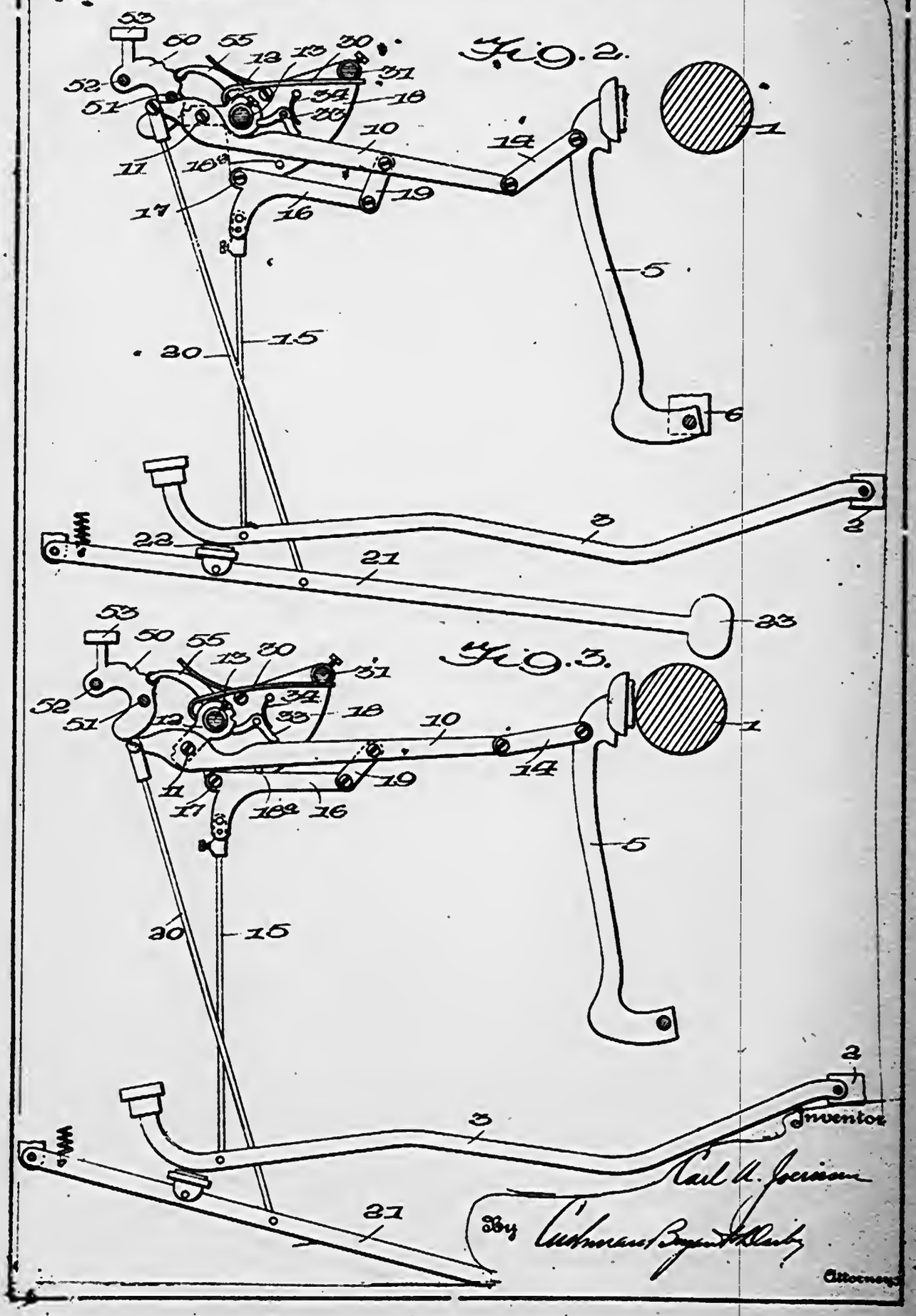

167734

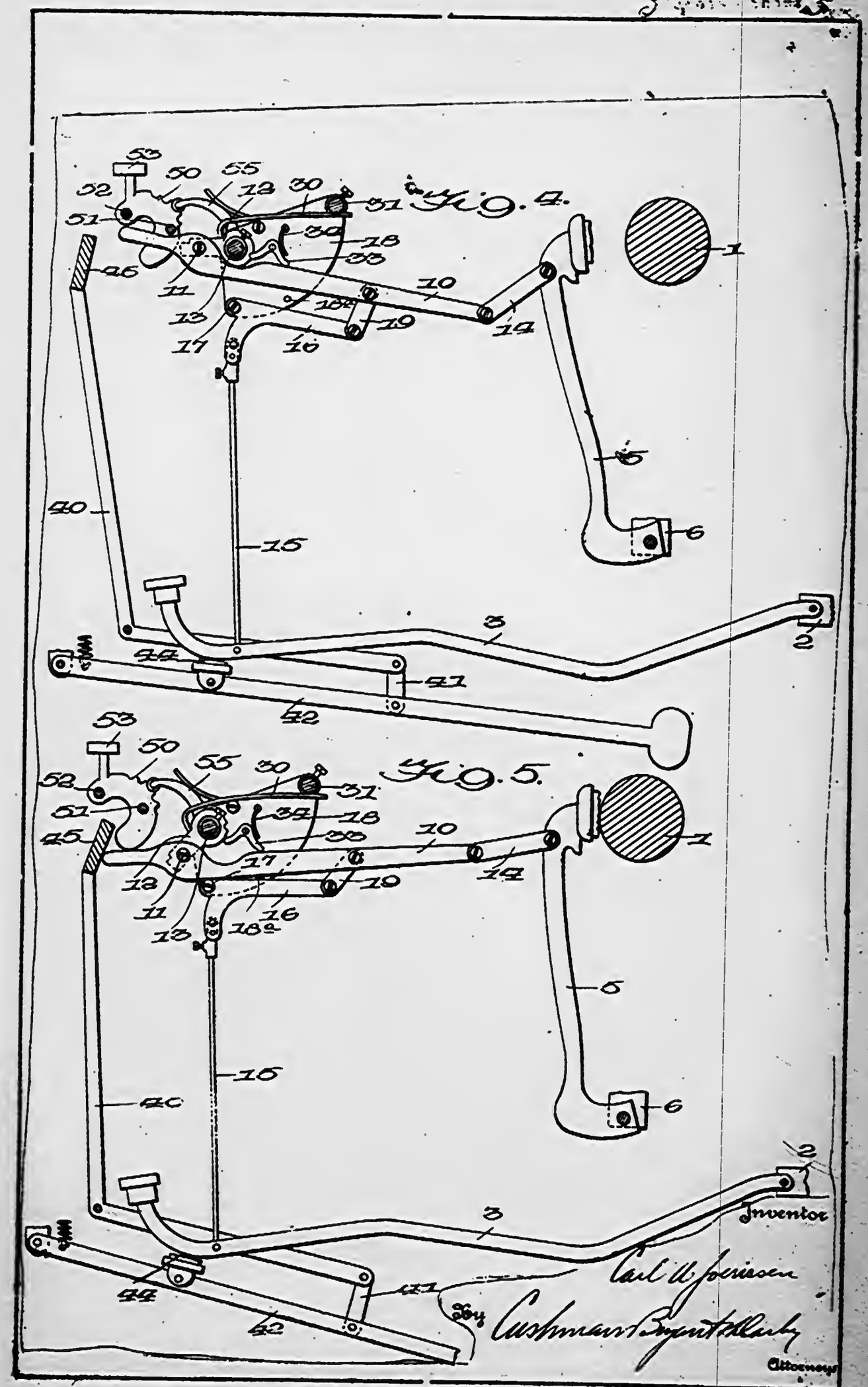
Fig. 4.
Fig. 5.
Inventor
Carl W. Jorissen
Cushman Darby & Cushman
Attorneys

337

167,734

Do not detach this slip
PATENTED DRAWING
Return to Div. "F" Rm. 6087B

May 3, 1932. C. A. JOERISSEN 1,856,340

TYPEWRITING MACHINE

Filed Feb. 12, 1927 2 Sheets-Sheet 1

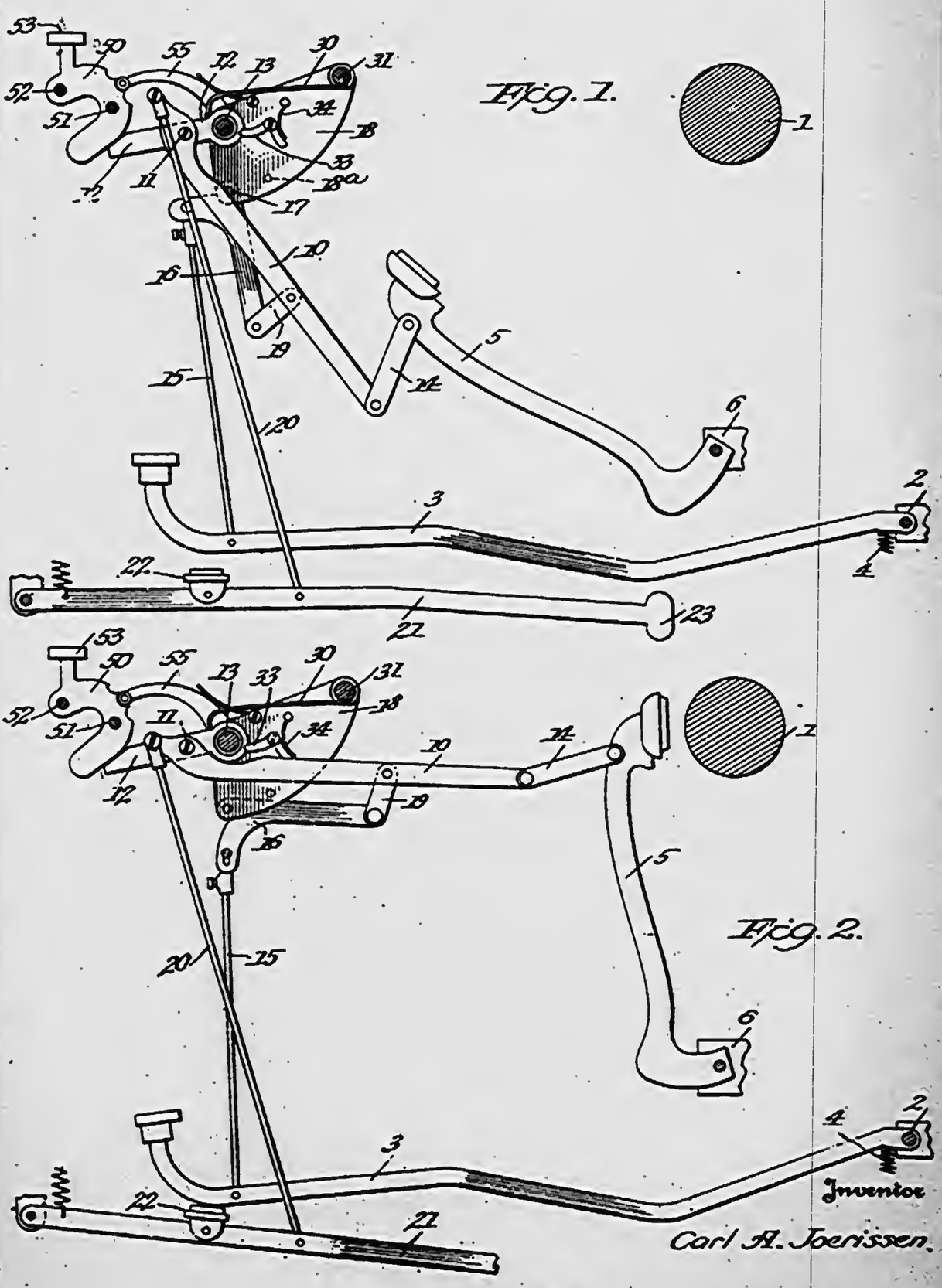

Inventor
Carl A. Joerissen.

By Cushman, Darby & Cushman
Attorneys

107. TYPEWRITING MACHINES

15

Substitute Dr. Int Entered

167734

Div.

2—2

May 3, 1932. C. A. JOERISSEN 1,856,340

TYPEWRITING MACHINE

Filed Feb. 12, 1927 2 Sheets-Sheet 2

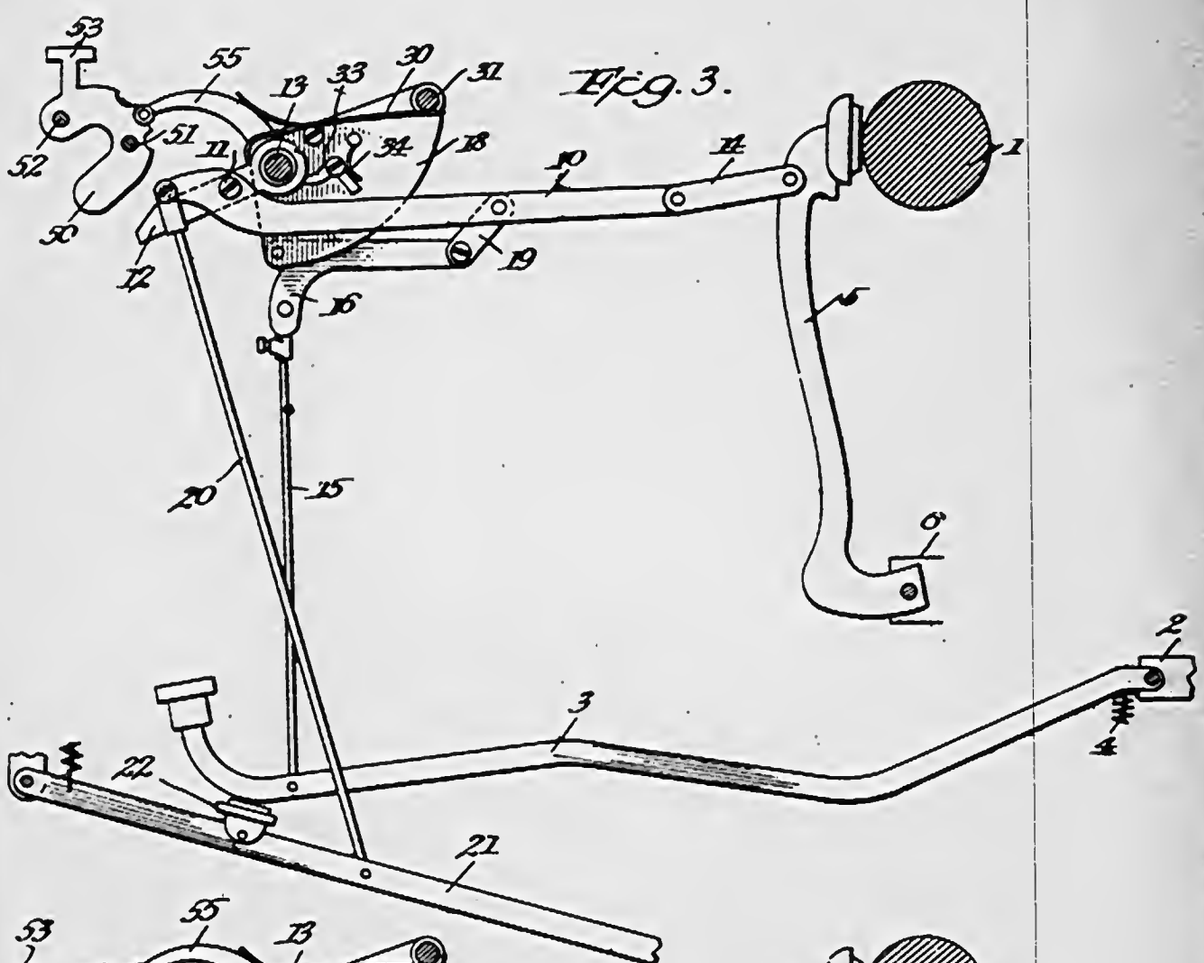

Fig. 3.

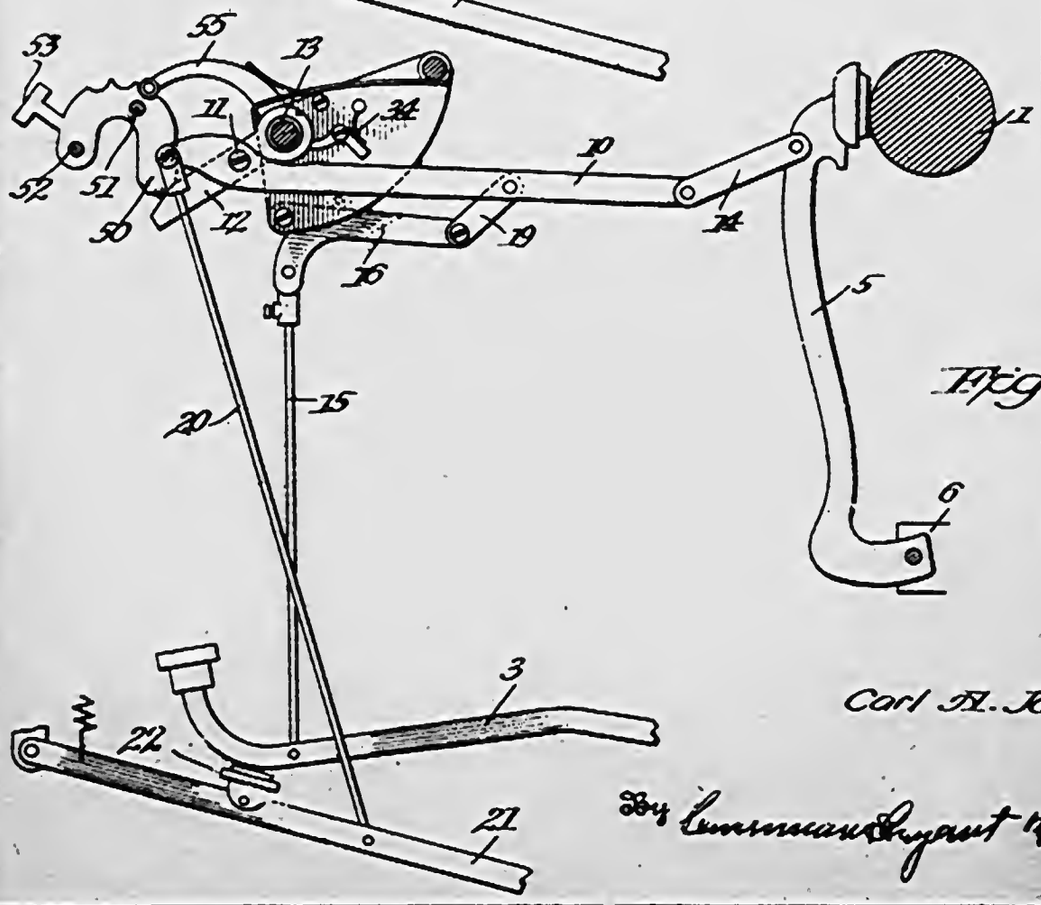

Fig. 4.

Inventor

Carl A. Joerissen.

By Lemmon & Bryant Darby

Attorneys

3735
FOR MR. CHIEF JUSTICE MARTIN

Vol. II

TRANSCRIPT OF RECORD

United States Court of Appeals for the District of Columbia

76

APRIL TERM, 1936.

No. 6855

CARL A. JOERISSEN, APPELLANT,

vs.

REMINGTON RAND, INC., A CORPORATION OF MARYLAND AND

REMINGTON RAND, INC., A CORPORATION OF DELAWARE.

APPEAL FROM THE DISTRICT COURT OF THE UNITED STATES FOR THE DISTRICT OF COLUMBIA.

FILED OCTOBER 2, 1936

PRINTED DECEMBER 2, 1936

LIBRARY
THE ASSOCIATION OF THE BAR
THE CITY OF NEW YORK

340

May 3, 1932.

C. A. JOERISSEN

1,856,340

TYPEWRITING MACHINE

Filed Feb. 12, 1927 2 Sheets-Sheet 1

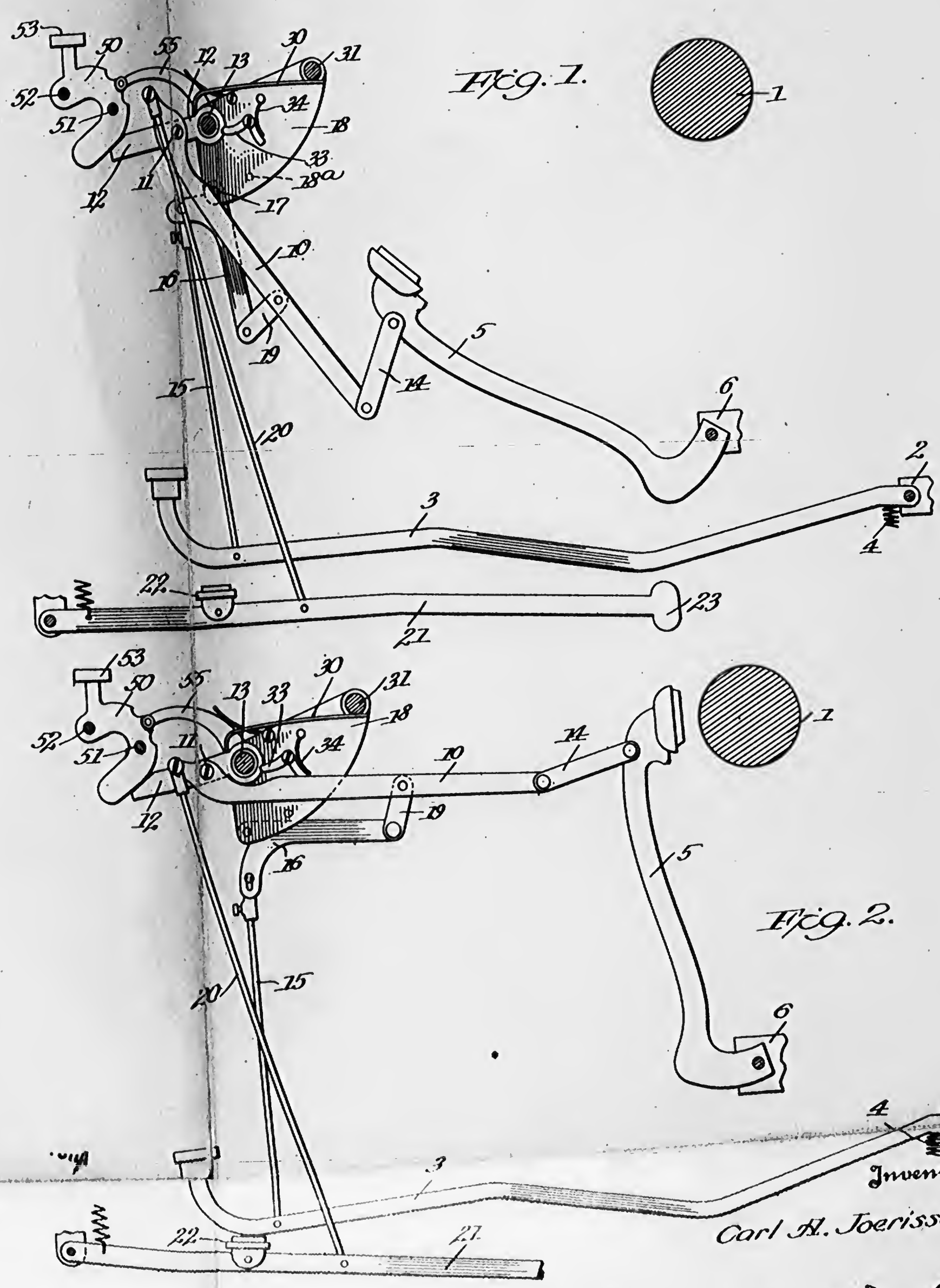

Inventor

Carl A. Joerissen,

By Cushman, Darby & Cushman

Attorneys

341

May 3, 1932. C. A. JOERISSEN 1,856,340

TYPEWRITING MACHINE

Filed Feb. 12, 1927 2 Sheets-Sheet 2

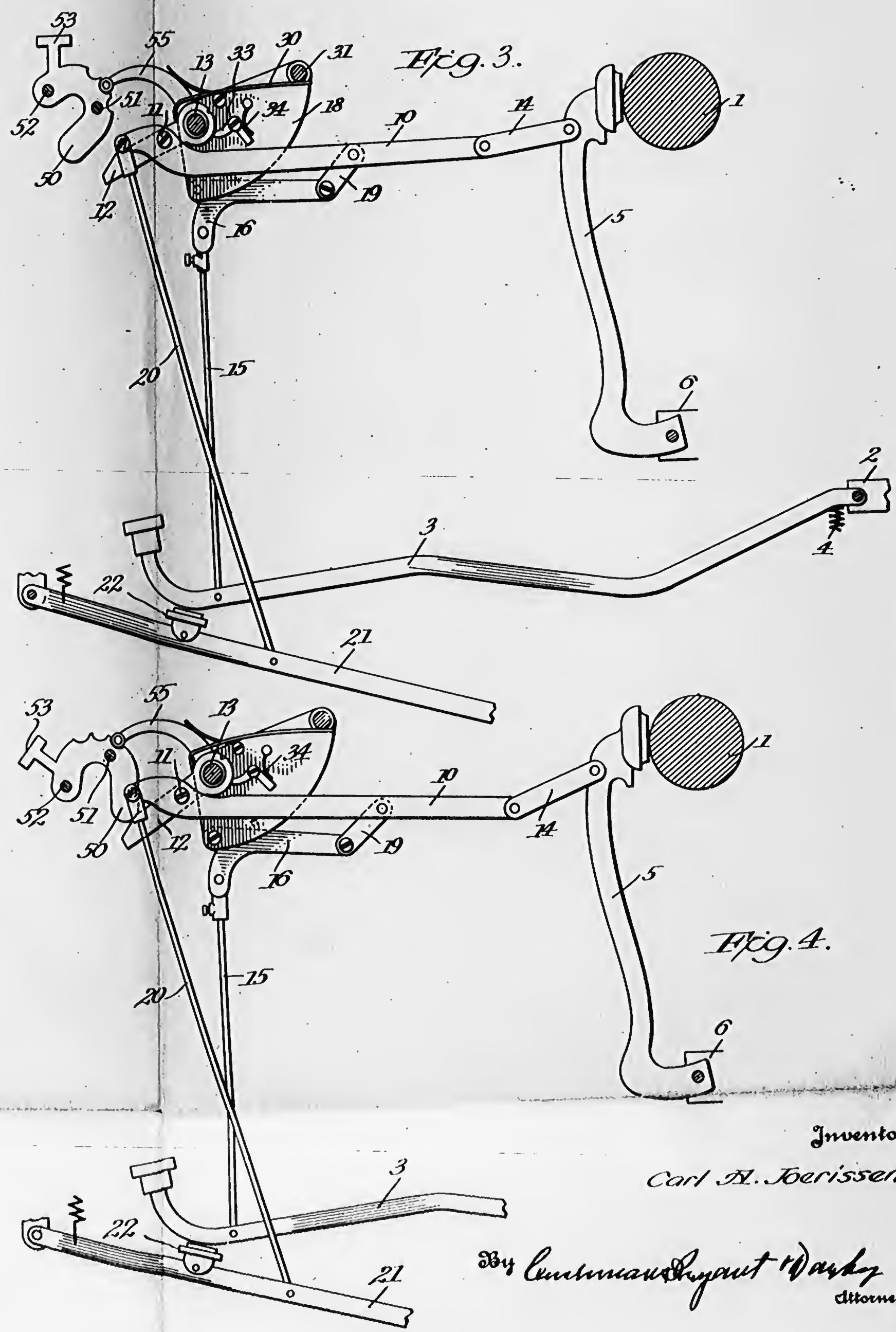

Inventor

Carl A. Joerissen.

By Cushman Darby & Cushman

Attorneys

Patented May 3, 1932 1,856,340

UNITED STATES PATENT OFFICE

CARL A. JOERISSEN, OF WASHINGTON, DISTRICT OF COLUMBIA

TYPEWRITING MACHINE

Application filed February 12, 1927. Serial No. 167,734.

The present invention relates to improvements in typewriting machines and particularly to the means for transmitting power from the key levers to the type carrying members of such a machine, whereby the parts may be operated with a minimum amount of noise. The invention represents, in part, a development along lines generally covered in United States Patent 1,846,339, issued to me February 23, 1932.

According to the present invention means are provided whereby the printing type will be positively forced into printing relation to the platen but will not strike the latter with a sudden blow as in the forms of machines at present commonly in use. More particularly the present invention relates to means by which the means that normally act to check movement of the type carriers to printing relation may be rendered inoperative, at will, so that the machine will be converted from a "noiseless" to a form of the character commonly in use in which the type carriers contact with the platen with a sudden blow.

With this and other ends in view, the invention consists in the construction and arrangement of parts that will be hereinafter described and claimed, reference being had to the accompanying drawings in which,

Figure 1 is a diagrammatic view of portions of a typewriting machine embodying the present invention, the type bar being shown in its position of rest.

Figure 2 is a similar view showing the parts in a slightly different relation.

Figure 3 is a similar view showing the type bar in printing position.

Figure 4 is a view similar to Figure 3 with the means for normally checking movement of the type carrier to printing relation rendered inoperative.

In the drawings only those portions of a typewriting machine necessary to illustrate the present invention are shown and, to a considerable degree, the illustration is more or less diagrammatic and conventional.

It will be appreciated, of course, that the invention is not limited to use with a typewriting machine in which the printing type are carried by pivotally mounted type bars, but as this is a common form of mechanism, such an embodiment is shown in the drawings.

It is to be understood that, except where specifically defined in the appended claims, the invention is not intended to be limited to the exact details shown in the drawings, and the latter are to be considered as illustrative rather than restrictive of the invention.

Referring to the drawings, 1 designates the platen of a typewriting machine and 2 a portion of the frame thereof to which are pivotally connected key levers 3. These parts may be of ordinary construction and any suitable means, such as a spring 4, may be associated with each key lever to normally maintain it in the substantially horizontal position represented in Figure 1.

As is usual, the type bars 5 are pivotally connected to a suitable frame segment 6 and each type bar is connected with its corresponding key lever by means whereby when the outer end of the lever is depressed the type bar will be swung upward and rearward about its pivotal connection to bring the head thereof into printing relation with a ribbon positioned adjacent the platen 1.

In the embodiment of the invention illustrated, the connection between each type bar and its associated key lever includes a lever 10 which is fulcrumed at an intermediate point of its length, as at 11, upon a fulcrum support 12 which is mounted to rock about a rod 13 suitably supported in the machine frame.

At its rear end the lever 10 is connected by a link 14, with the type bar 5 and means are provided whereby when the forward end of the key or lever is depressed, the lever 10 will be rocked about its fulcrum 11 and, through the link 14, caused to move the type bar rearward and upward about its pivot into position to contact with the platen 1. As the pivotal connection between the lever 10 and link 14 comes into substantial alignment with the axes 11, 13, (and the connection between said link and type bar,) the movement of the bar will be temporarily checked. This will occur at a position of the parts inter-

mediate of those illustrated in Figures 2 and 3, and just prior to the head of the type bar coming into printing relation with the platen. Thereafter the fulcrum support 12 will be bodily rocked slightly into the position shown in Figure 3, imparting a substantially straight line, longitudinal, movement to the lever 10 and link 14 forcing the type bar into printing relation with the platen, but without delivering a sharp or sudden blow in contacting therewith.

It will be seen that that portion of member 12 between the pivots 11 and 13 constitutes a link portion swingable in a downward and rearward direction to complete the stroke of the type bar through the toggle 10, 14. The free end or tail portion of member 12, being of some weight assists in the carry through of the link portion.

Figure 2 of the drawing illustrates the position of the several parts during a portion of the downward stroke of the key lever, prior to the members 10, 14 of the toggle-like connection between the fulcrum support 12 and the type bar coming into alignment or position for checking swinging motion of the type bar; and Figure 3 shows the position of the parts at the completion of the printing movement of the type bar, the fulcrum support 12 having been rocked about its axis, by power produced during the final portion of the depression of the key lever as will be hereinafter more particularly described.

In the embodiment of the invention illustrated, the key lever 3 is connected by a rod 15 with one arm of a bell crank lever 16 which is fulcrumed at 17 on a frame plate 18. The other arm of the bell crank lever 16 is, by a link 19, connected to the lever 10 so that when the forward end of the key lever 3 is depressed, the lever 10 will be positively moved upward and rearward about its fulcrum 11 to carry the type bar 5 from the position of rest, shown in Figure 1, toward the platen.

It will be seen that the parts 16, 19 constitute in effect a second toggle which acts to expand the initially collapsed primary toggle 10, 14 interposed between the type carrier and the fulcrum support 12. Movement of this additional toggle effects expansion of the primary type carrier actuating toggle and assists in the completion of the printing stroke of the type carrier due to rocking of the fulcrum support 12.

In the embodiments of the invention illustrated the forward end of each lever 10 is connected by a rod 20 with a lever 21 arranged beneath the key lever 3 and provided with a contact pad or cushion 22 with which the key lever contacts near the termination of its downward movement, so that said lever 21 is given a downward movement during the latter portion of each operation of the key lever.

The result of the key lever coming into contact with the abutment 22 on the lever 21 is to effect a bodily movement of the fulcrum support 12, which as before referred to, imparts a longitudinal movement to the lever 10 and link 14 to complete the travel of the type bar toward the platen, such contact occurring after the swinging movement of the type bar has been checked as before described, by reason of the substantial alignment of the members of the toggle-like connection between the fulcrum support 12 and the type bar. This downward movement of the lever 21 is assisted somewhat by enlarging or slightly weighting the rear free end of said lever, as at 23. The key lever 3 will, as above described, impart a blow to the lever 21 near the end of its movement which will carry the lever 21 down and out of contact with the key lever.

The fulcrum support 12 above referred to, is connected by welding or other suitable means to one end of a leaf spring 30 which is suitably secured to a rod 31 of the machine frame and the bodily movement of the support 12 before referred to, acts to place this spring under slight tension which assists in returning the parts to normal position when pressure is removed from the key lever 3.

To insure that the fulcrum support 12 will not be bodily adjusted about its axis during the initial portion of the downward movement of a key lever and the consequent rearward swinging of a type bar, I preferably provide for positively holding said support in its normal position and for automatically releasing said holding means as the parts come into position for checking the printing movement of the type bar.

As shown, a pawl or dog 33 is pivotally mounted on the frame plate 18 and one arm thereof is normally held in engagement with a recess in the hub of the fulcrum support 12 by the pressure of a short leaf spring 34. The other arm of the holding dog 33 extends into the path of the lever 10, whereby as this lever comes into substantial horizontal position, or the position wherein rearward swinging movement of the type bar is checked, said lever, 10, will contact with and positively rock the pawl 33 about its pivot disengaging the fulcrum support 12 and permitting the latter to be moved about its axis, as previously described, to effect a completion of the printing movement of the type bar.

A stop 18ª may be provided on the frame plate 18 to limit upward movement of the bell crank lever 16 and movement of the toggle-like connection, provided by the lever 10 and link 14 between the key lever and type bar.

It will be understood that each key lever and its associated type bar are connected by levers and links as above described, the sev-

eral type actions being duplicates of each other.

By the constructions so far described, it will be seen that the swinging movement of each type bar, effected by the depression of a key lever, will be checked prior to the type bar coming into printing relation with the platen and the continued depression of the key lever will effect a bodily rocking of the fulcrum support 12 imparting a substantially straight line movement to the head of the type bar, completing the travel of the type bar and bringing its head into printing relation with the platen.

If, however, it is desired that the type bar should have a continuous uninterrupted swinging movement from its position of rest to printing relation with the platen, means are provided whereby all of the fulcrum supports 12 may be simultaneously rocked so that the checking of the type bar movement, before described, will not occur.

As shown, a series of cams 50, one for each of the fulcrum supports 12, are mounted on a rod 51 suitably supported in the machine frame, each of said cams being adapted to engage the forward end of one of the fulcrum supports as the cam is rocked about said rod 51.

The several cams are shown as being connected by a rod 52 and one of them is provided with a key or manually actuatable member 53. By depressing this key all of the cams 50 will be rocked and thereby all of the fulcrum supports 12 adjusted downward and forward about the axial rod 13, into the relation to the other parts shown in Figure 4. With the members 12 in the positions shown in Figure 4 there will be no checking of the rearward movement of each type bar, but the latter will have an uninterrupted movement from its position of rest to printing relation to the platen whenever its corresponding key lever is depressed.

A pawl 55 is provided for engaging notches or corrugations formed in one of the cams 50 so that when said cams are moved from the position shown in Figure 1 to that illustrated in Figure 4, as above described, they will all be turned to such adjusted relation.

A slight upward pull on the key or manually actuatable member 53 will disengage the pawl 55 and permit the cams to be returned to normal operative position, the leaf springs 30 acting to effect a corresponding movement of the fulcrum supports 12.

I claim:

1. In a typewriting machine, the combination of a platen, a type carrier movable to and from printing relation to the platen, a key lever, means controlled by actuation of the key lever for positively moving the type carrier to printing position, including devices for normally checking such movement of the type carrier prior to its reaching printing position, and means for rendering said checking devices inoperative to check such movement.

2. In a typewriting machine, the combination of a platen, a type carrier movable to and from printing relation to the platen, a key lever, means controlled by actuation of the key lever for effecting initial movement of the type carrier toward the platen, means for normally checking such movement of the type carrier, means actuated by movement of the key lever for effecting completion of the movement of the type carrier to printing relation to the platen, and means for rendering said checking means inoperative to check such movement.

3. In a typewriting machine, the combination of a platen, a plurality of type carriers each movable to and from printing relation to the platen, a key lever associated with each type carrier, means controlled by actuation of each key lever for positively moving the associated type carrier to printing position, means for normally checking such movement of each type carrier prior to its reaching printing position, and means for rendering all of said checking means inoperative.

4. In a typewriting machine, the combination of a platen, a type bar mounted to swing upward and rearward into printing relation to the platen, a key lever, means controlled by actuation of the key lever for moving the type bar to printing position, and including devices for normally checking such movement of the type bar prior to its reaching printing position, and means for rendering said checking devices inoperative to check such movement.

5. In a typewriting machine, the combination of a platen, a type carrier movable to and from printing relation to the platen, a key lever, means controlled by actuation of the key lever for effecting movement of the type carrier to printing position, means for checking such movement of the type carrier, prior to its reaching printing position, including a pivotally mounted member connected to the type carrier, and means for adjusting said pivotally mounted member to render said checking means inoperative.

6. In a typewriting machine. the combination of a platen, a pivotally mounted type bar adapted to swing upward and rearward into printing relation to the platen, a key lever, means controlled by the key lever for positively moving the type bar to printing position, means for normally checking such movement of the type bar prior to its reaching printing position including a pivotally mounted member connected to the type bar, and means for adjusting said pivotally mounted member about its axis to render the checking means inoperative.

7. In a typewriting machine, the combination of a platen, a type carrier movable to and from printing relation to the platen, a key lever, connections between the key lever and the type carrier including means for checking movement of the carrier toward the platen prior to its reaching printing position and comprising a lever having one end connected with the type carrier, a pivotally mounted support for the last said lever, and means normally holding said fulcrum support stationary, and being automatically released to permit movement of the fulcrum support with the lever to carry the type carrier to printing position.

8. In a typewriting machine, the combination of a platen, a type carrier movable to and from printing relation to the platen, a key lever, connections between the key lever and the type carrier including means for checking movement of the carrier toward the platen prior to its reaching printing position and comprising a lever having one end connected with the type carrier, a pivotally mounted support for the last said lever, and a pawl engaging the fulcrum support and normally holding it stationary, the tail of the pawl extending into the path of movement of the last said lever, whereby the fulcrum support will be automatically released and permitted to move with said lever to carry the type carrier to printing position.

9. In a typewriting machine, the combination of a platen, a type carrier movable to and from printing relation to the platen, a key lever, connections between the key lever and the type carrier including means for checking movement of the carrier toward the platen prior to its reaching printing position and comprising a lever having one end connected with the type carrier, a pivotally mounted support for the last said lever, means normally holding said fulcrum support stationary, and being automatically released to permit movement of the fulcrum support with the lever fulcrumed thereon to carry the type carrier to printing position, and manually adjustable means for rendering said holding means inoperative.

10. In a typewriting machine, the combination of a platen, a type carrier movable to and from printing relation to the platen, a key lever, connections between the key lever and the type carrier including means for checking movement of the carrier toward the platen prior to its reaching printing position and comprising a lever fulcrumed at an intermediate point in its length, a pivotally mounted fulcrum support for the last said lever, means normally holding said fulcrum support stationary, and being automatically released by the lever fulcrumed on said fulcrum support as the movement of the type carrier is checked, and means for rocking the fulcrum support about its axis to effect completion of the movement to printing position of the type carrier.

11. In a typewriting machine, the combination of a platen, a type carrier movable to and from printing relation to the platen, a key lever, connections between the key lever and the type carrier including means for checking movement of the carrier toward the platen prior to its reaching printing position and comprising a lever fulcrumed at an intermediate point in its length, a pivotally mounted fulcrum support for the last said lever, means normally holding said fulcrum support stationary, and being automatically released by the lever fulcrumed on said fulcrum support as the movement of the type carrier is checked, and supplemental means including a member for rocking the said fulcrum support to effect completion of the movement to printing position of the type carrier.

12. In a typewriting machine, the combination of a platen, a type carrier movable to and from printing relation to the platen, a key lever, connections between the key lever and the type carrier including means for checking movement of the carrier toward the platen prior to its reaching printing position and comprising a lever fulcrumed at an intermediate point in its length, a pivotally mounted fulcrum support for the last said lever, and means including a member extending beneath the key lever for positively rocking said fulcrum support to effect completion of the movement to printing position of the type carrier.

13. In a typewriting machine, the combination of a platen, a type bar movable to and from printing relation to the platen, a key lever, connections between the key lever and the type bar including means for checking movement of the carrier toward the platen prior to its reaching printing position and comprising a lever fulcrumed at an intermediate point in its length, a pivotally mounted fulcrum support for the last said lever, a pivotally mounted member extending beneath the key lever and adapted to be rocked thereby, and means for transmitting movement of said member to the pivotally mounted fulcrum support to bodily rock the latter and effect completion of the movement of the type bar to printing position.

14. In a typewriting machine, the combination of a platen, a type carrier movable to and from printing relation to the platen, a key lever, connections between the key lever and the type carrier including means for checking movement of the carrier toward the platen prior to its reaching printing position and comprising a lever having one end connected with the type carrier, a pivotally mounted support for the last said lever, and manually operable means for bodily rock-

ing said fulcrum support to render the checking means inoperative.

15. In a typewriting machine, the combination of a platen, a type carrier movable to and from printing relation to the platen, a key lever, connections between the key lever and the type carrier including means for checking movement of the carrier toward the platen prior to its reaching printing position and comprising a lever having one end connected with the type carrier, a pivotally mounted support for the last said lever, means normally holding said fulcrum support stationary, and manually operable means for bodily rocking said fulcrum support to render the checking means inoperative.

16. In a typewriting machine, the combination of a platen, a type carrier movable to and from printing relation to the platen, a key lever, connections between the key lever and the type carrier including means for checking movement of the carrier toward the platen prior to its reaching printing position and comprising a lever having one end connected with the type carrier, a pivotally mounted support for the last said lever, manually operable means for bodily rocking said fulcrum support to render the checking means inoperative, and means for retaining the fulcrum support in such adjusted position.

17. In a typewriting machine, the combination of a platen, a series of pivotally mounted type bars which normally lie in a substantially horizontal position, a series of key levers, one for each type bar, connections between each lever and one of the type bars for swinging the type bar into printing relation to the platen when the key lever is actuated, and including devices for checking movement of each type bar prior to its coming into printing relation with the platen, and means for rendering inoperative the devices for normally checking movement of the type bars to printing relation with the platen.

18. In a typewriting machine, the combination of a platen, a series of pivotally mounted type bars which normally lie in a substantially horizontal position, a series of key levers, one for each type bar, connections between each lever and one of the type bars for swinging the type bar into printing relation to the platen when the key lever is actuated, and including means for checking movement of the type bar prior to its coming into printing relation to the platen, a rock shaft extending longitudinally of the platen above the key levers, and devices on said shaft for rendering all of said checking means inoperative when said shaft is rocked.

19. In a typewriting machine, the combination of a platen, a type carrier movable to and from printing relation to the platen, a key lever, means controlled by actuation of the key lever for positively moving the type carrier to printing position, and including means for normally checking such movement of the type carrier prior to its reaching printing position, and means for rendering said checking means inoperative.

20. In a typewriting machine, the combination of a platen, a series of pivotally mounted type bars, a series of key levers, one for each type bar, connections between each lever and one of the type bars for swinging the type bar into printing relation to the platen when the key lever is depressed, and means adjustable by an operator whereby the movement of the type bars effected by said connections may be checked prior to the bar reaching printing relation to the platen or the bar permitted to swing uninterruptedly from inactive position to printing relation to the platen independent of any variation in the length of movement of the key levers.

21. In a typewriting machine, the combination of a platen, a series of pivotally mounted type bars, a series of key levers, one for each type bar, connections between each key lever and one of the type bars for swinging the bar into printing relation to the platen when the key lever is depressed, and means for simultaneously effecting adjustment of the connections between all of the key levers and associated type bars without moving the type bars whereby, at will, the operator may vary the force with which the type bars will strike the platen independently of any variation in the strokes of the key levers.

22. In a typewriter, a type bar pivoted for an upward and rearward operative stroke, a toggle comprising two pivotally connected members of which one has a pivotal connection with the type bar, a swingable link portion having a pivotal connection with the other of said toggle members, said link portion being swingable downwardly from its normal position of rest and rearwardly, a key bar having a connection with said toggle and operable to move the toggle members from a normally collapsed downwardly extending position to a relatively straightened position and to impart to the type bar through the toggle members a terminally checked throw to a position slightly in advance of striking position, and means external of said connection thereupon effective to swing said link portion to complete the stroke of the type bar through said toggle.

In testimony whereof I have hereunto set my hand.

CARL A. JOERISSEN.

347

(No Model.) 5 Sheets—Sheet 1.

W. RENNYSON.

TYPE WRITING AND MATRIX MAKING MACHINE.

No. 403,075. Patented May 7, 1889.

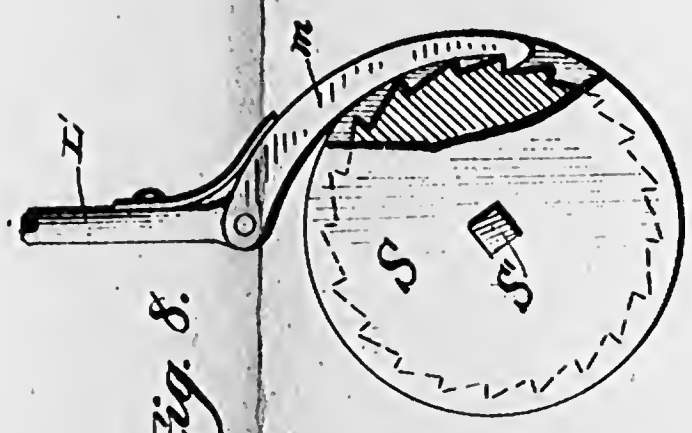

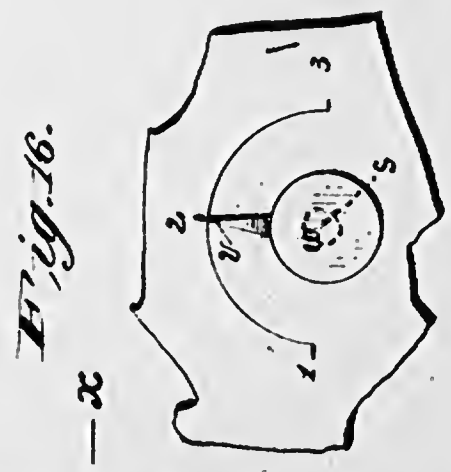

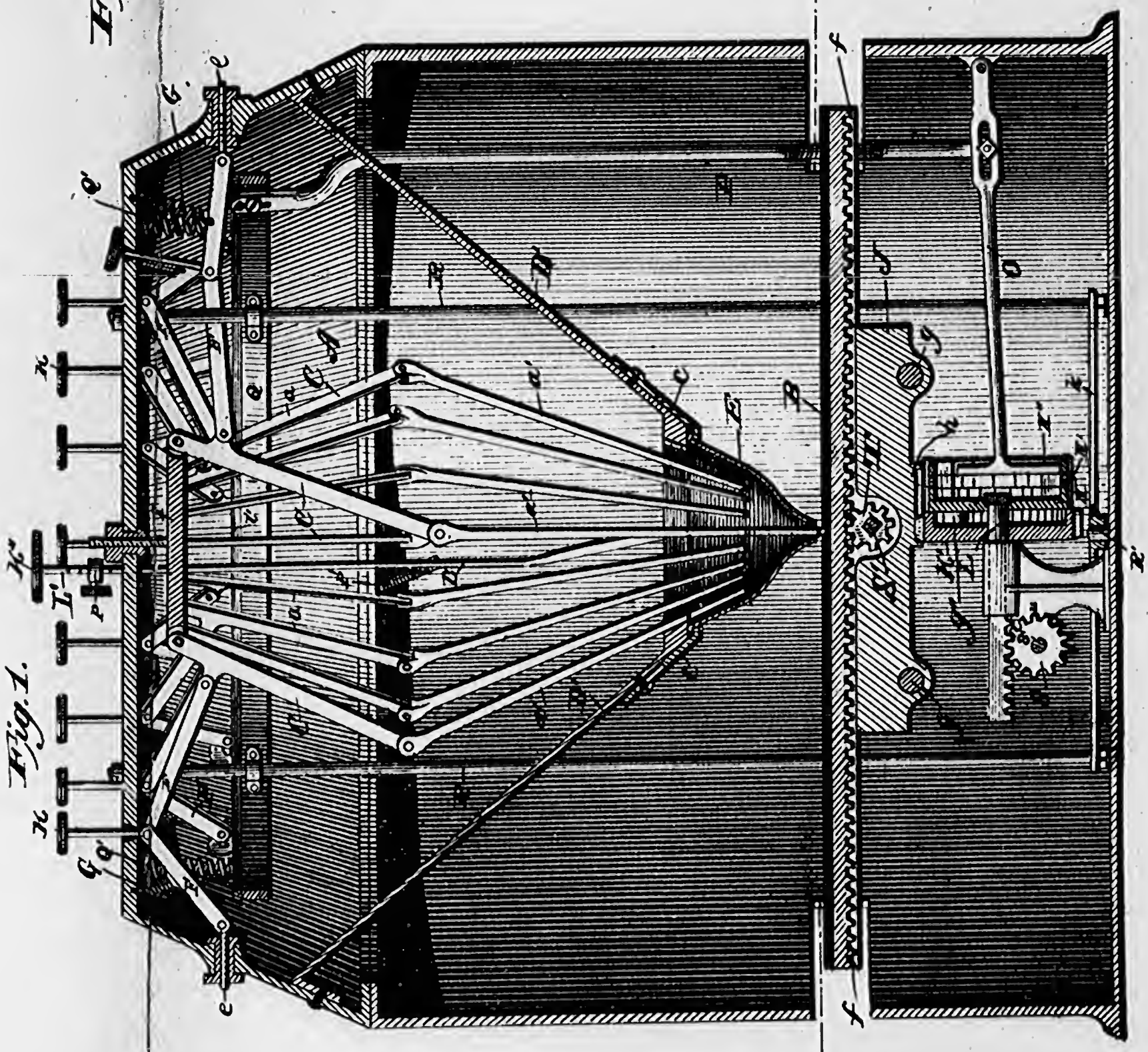

WITNESSES

Jno. S. Finch Jr.

C. M. Davis

INVENTOR.

William Rennyson

By C. M. A. Espenscheid

Attorney

348

(No Model.) 5 Sheets—Sheet 2.

W. RENNYSON.

TYPE WRITING AND MATRIX MAKING MACHINE.

No. 403,075. Patented May 7, 1889.

Fig. 2.

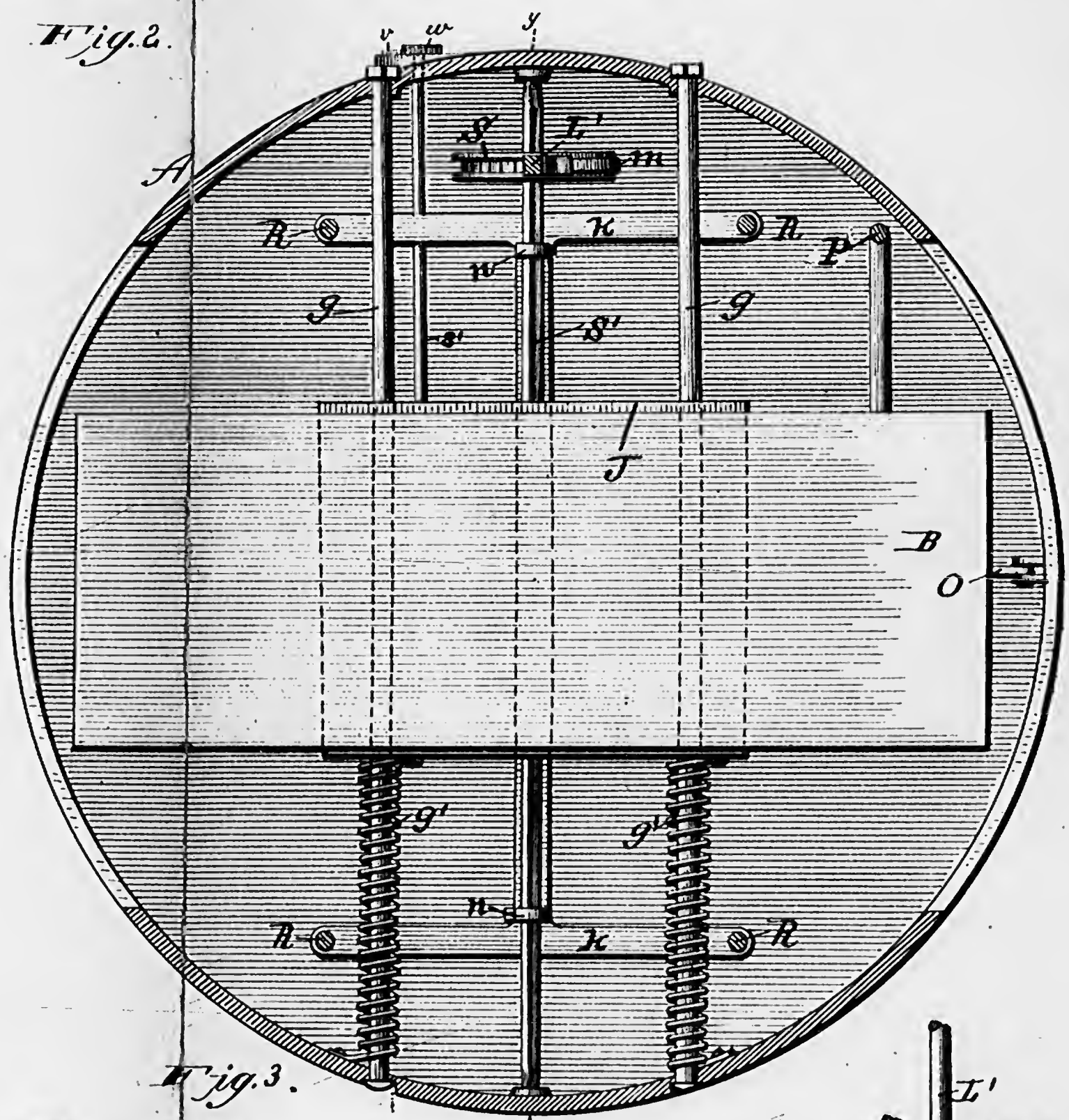

Fig. 3.

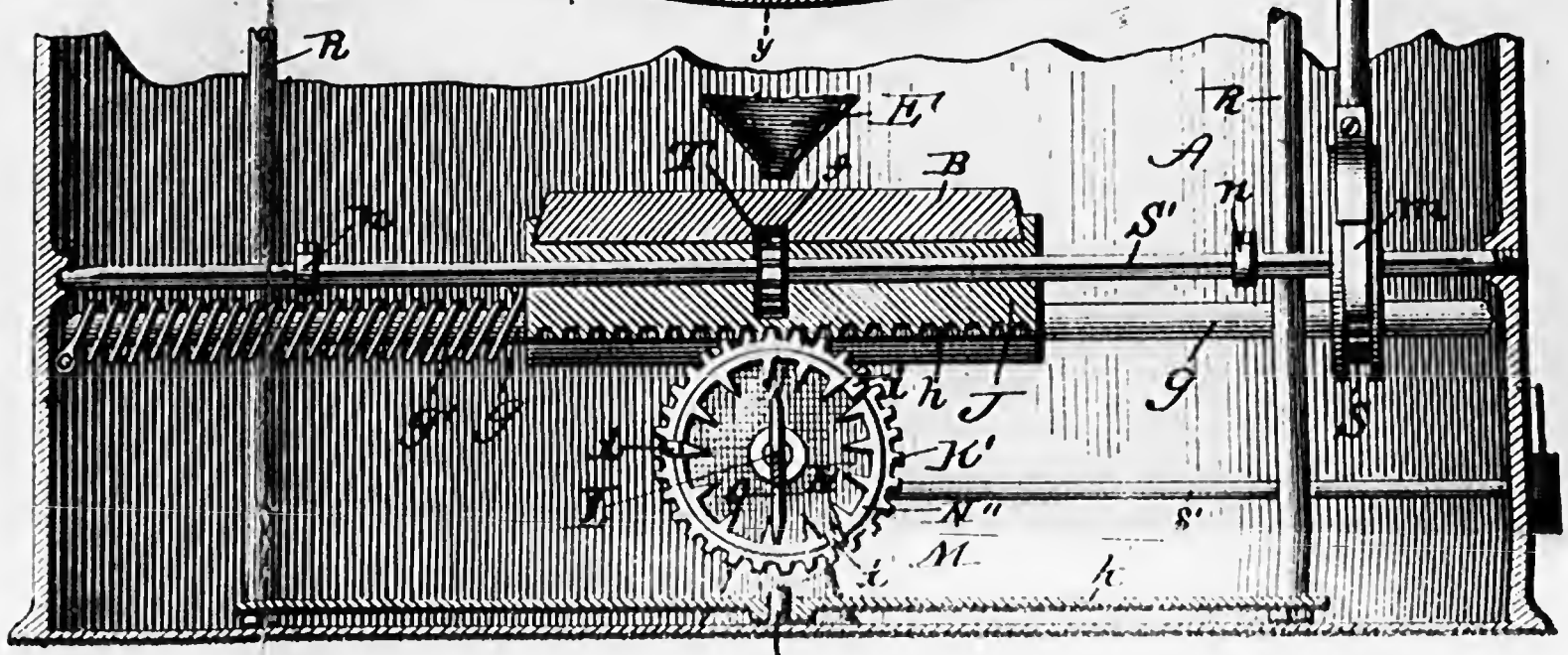

WITNESSES

Jno. S. Finch Jr.

C. H. Davis

INVESTOR

William Rennyson

By C. M. Alexander

Attorney

(No Model.) 5 Sheets—Sheet 3.

W. RENNYSON.

TYPE WRITING AND MATRIX MAKING MACHINE.

No. 403,075. Patented May 7, 1889.

Fig. 4.

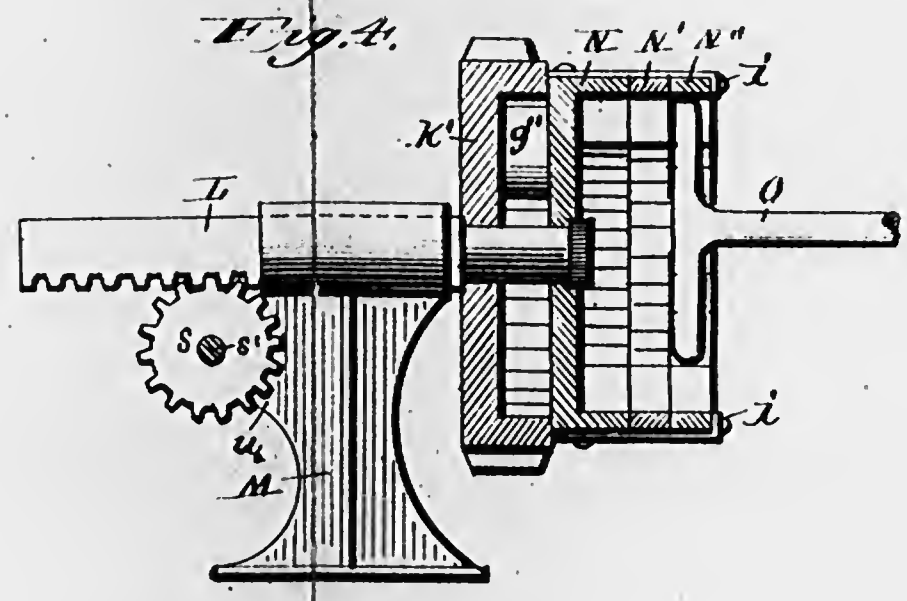

Fig. 5.

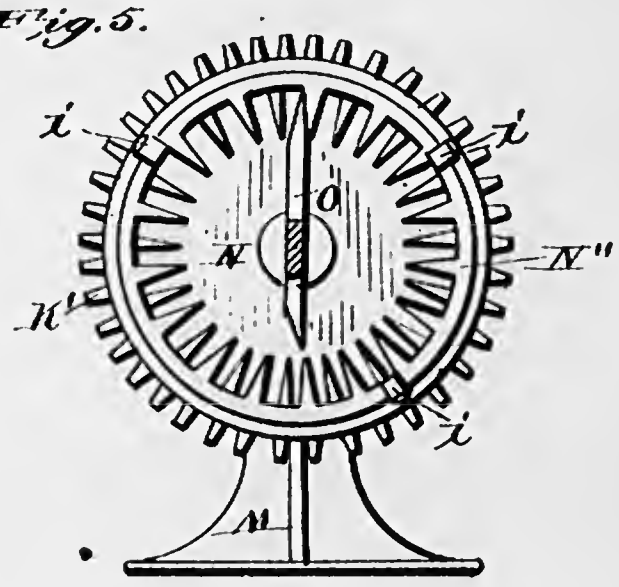

Fig. 6.

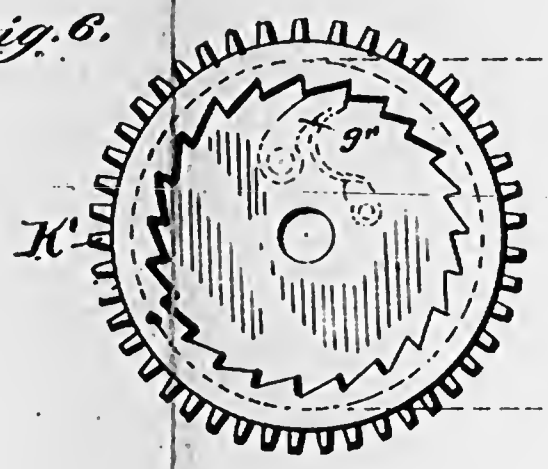

Fig. 7.

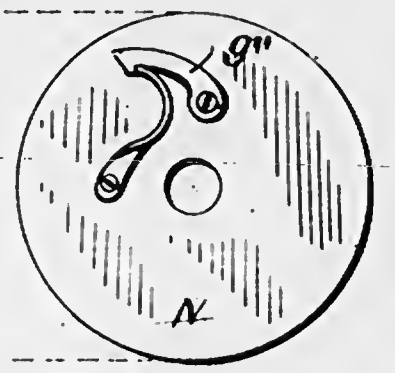

Fig. 15.

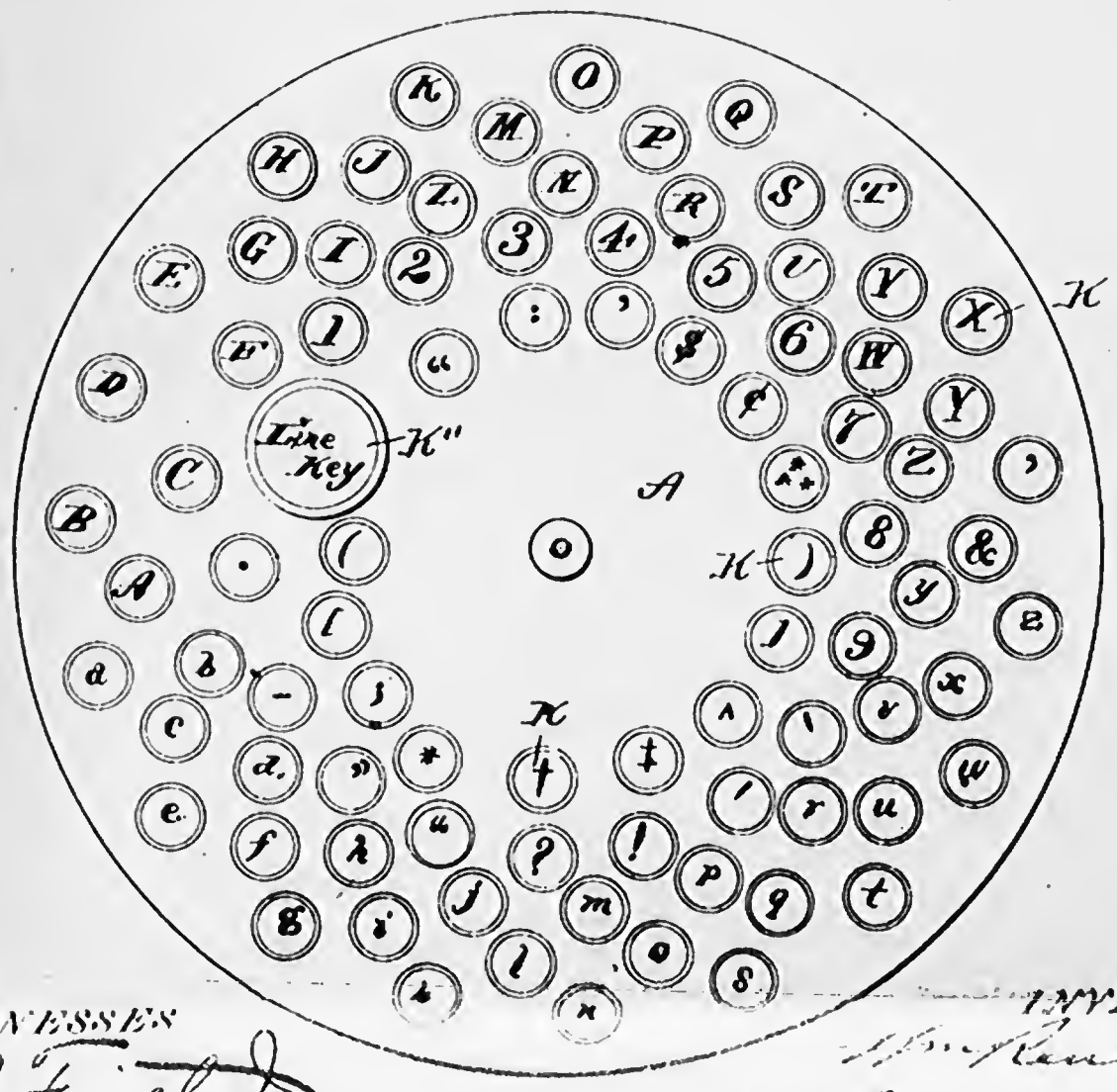

WITNESSES

Jno. S. Finch Jr.

C. A. Adams

INVENTOR

W. Rennyson

By C. M. Alexander

Attorney

(No Model.) 5 Sheets—Sheet 4.

W. RENNYSON.

TYPE WRITING AND MATRIX MAKING MACHINE.

No. 403,075. Patented May 7, 1889.

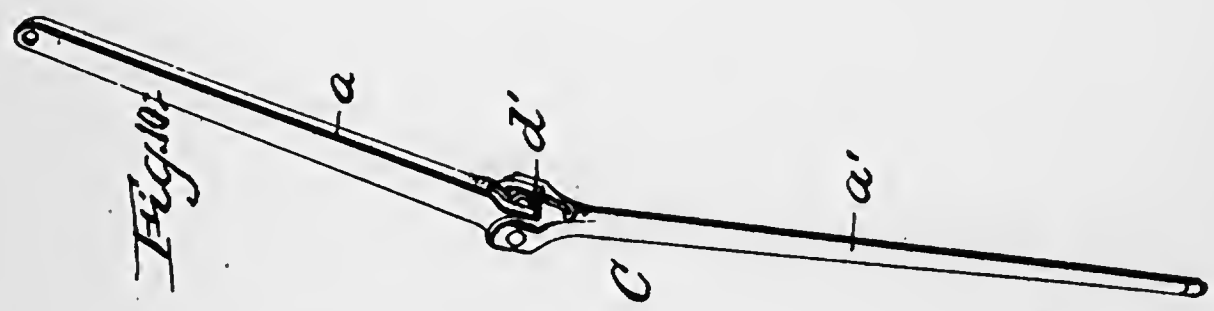

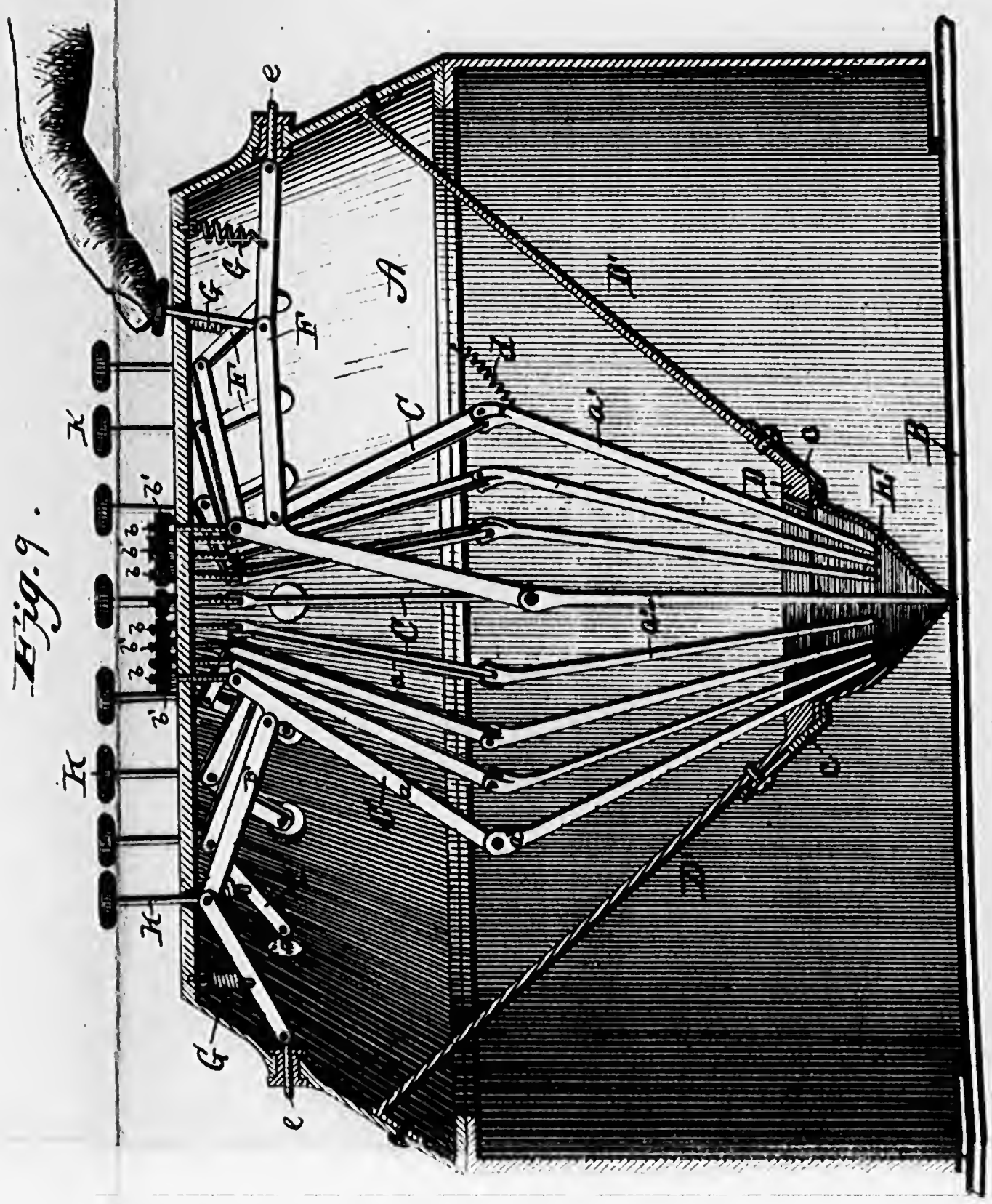

WITNESSES.
John S. Finch
Chas. O. Davis

INVENTOR.
William Rennyson
By C. M. Alexander
Attorney

351

(No Model.) 5 Sheets—Sheet 5.

W. RENNYSON.

TYPE WRITING AND MATRIX MAKING MACHINE.

No. 403,075. Patented May 7, 1889.

Fig. 11.

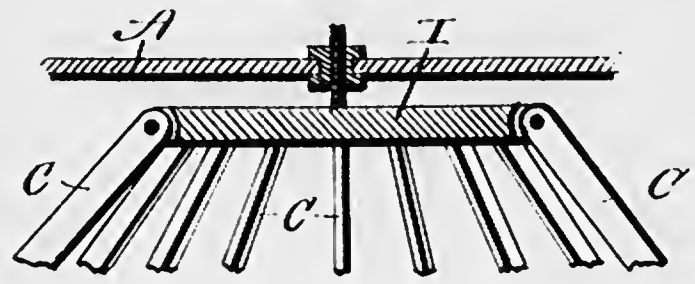

Fig. 12.

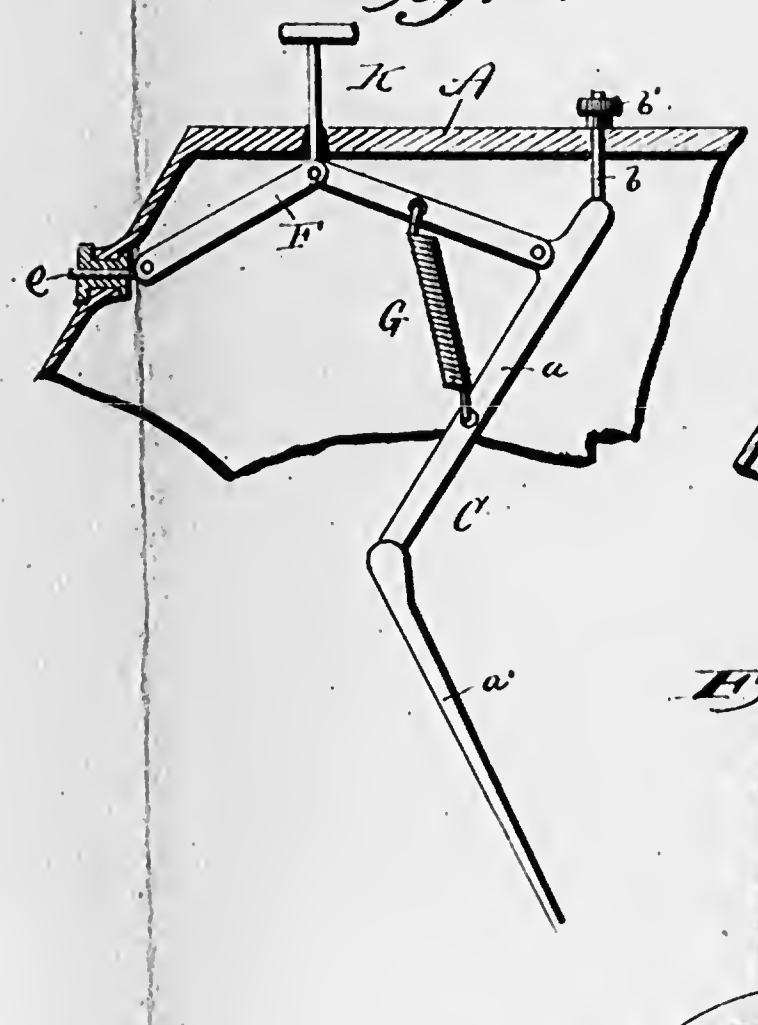

Fig. 13.

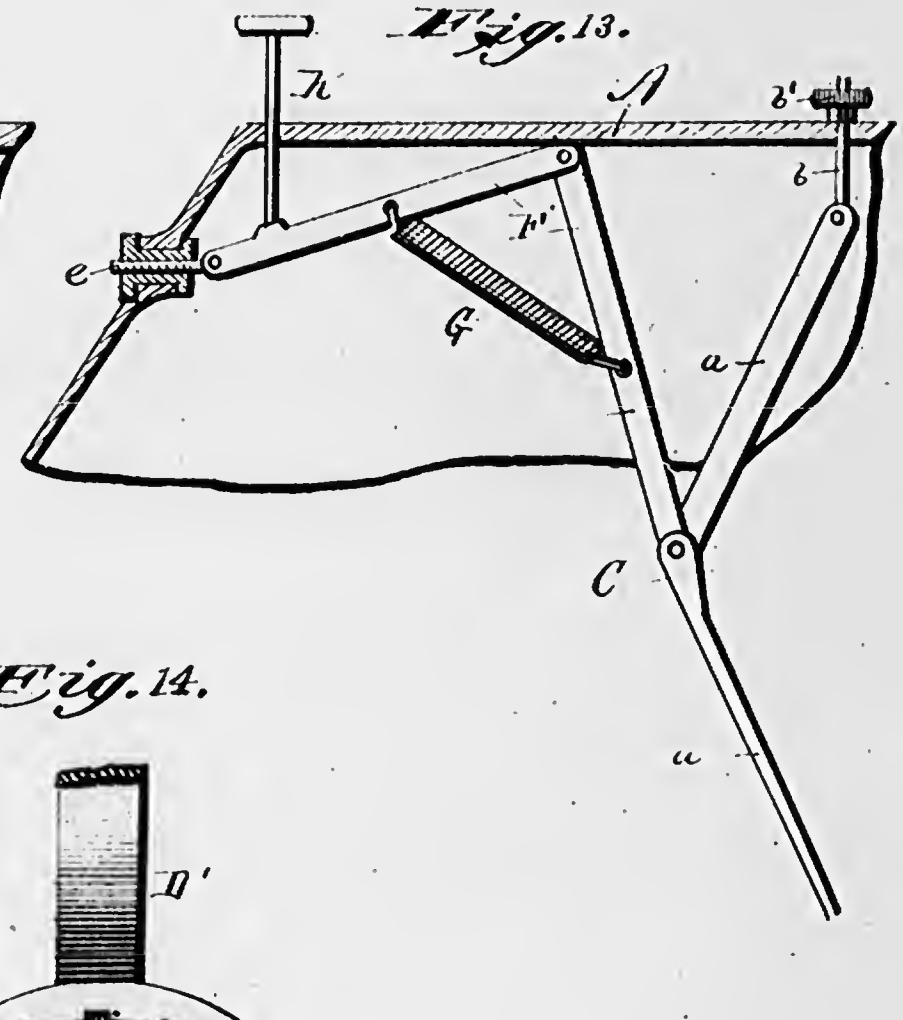

Fig. 14.

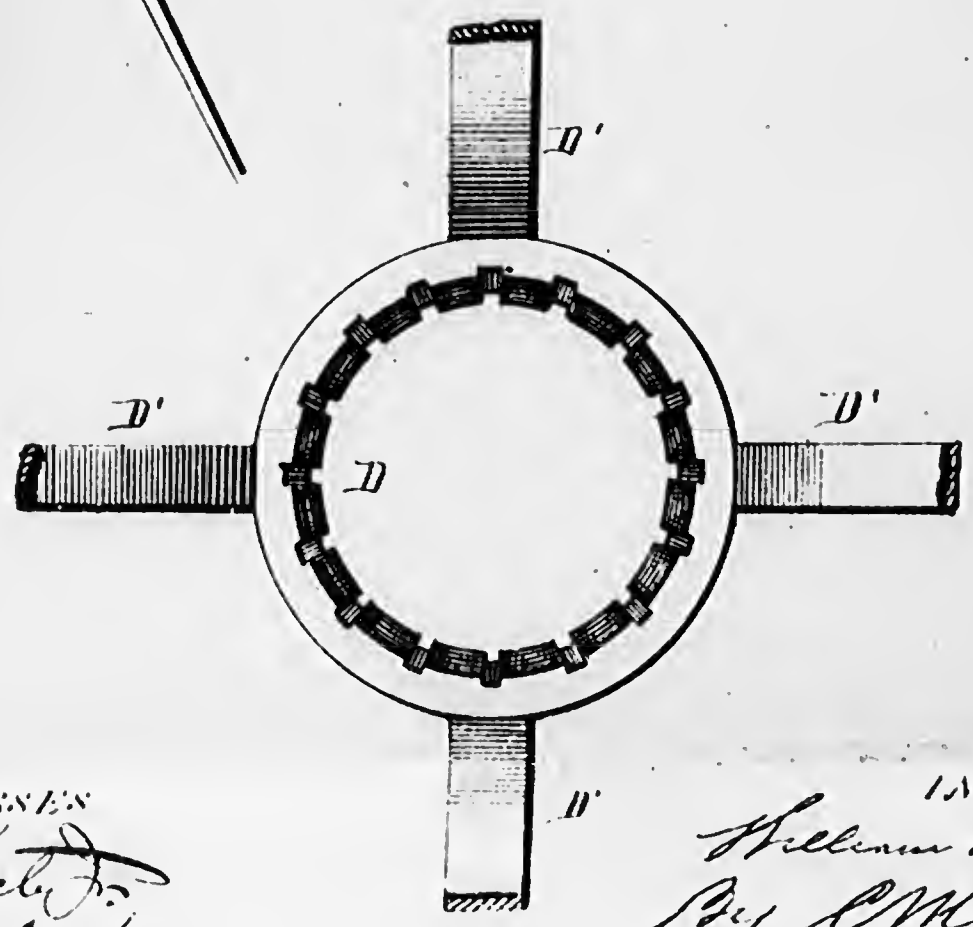

WITNESSES

Jno. S. Finch Jr.

Chas. H. Foster

INVENTOR.

William Rennyson

By C. M. Alexander

Attorney

UNITED STATES PATENT OFFICE.

WILLIAM RENNYSON, OF NORRISTOWN, PENNSYLVANIA.

TYPE-WRITING AND MATRIX-MAKING MACHINE.

SPECIFICATION forming part of Letters Patent No. 403,075, dated May 7, 1889.

Application filed December 17, 1888. Serial No. 293,868. (No model.)

To all whom it may concern:

Be it known that I, WILLIAM RENNYSON, a citizen of the United States, residing at Norristown, in the county of Montgomery and State of Pennsylvania, have invented certain new and useful Improvements in Type-Writing and Matrix-Making Machines, of which the following is a specification, reference being had therein to the accompanying drawings, in which—

Figure 1 represents a vertical sectional view of my machine complete, one of the type-bars being depressed; Fig. 2, a horizontal sectional view of the machine, taken on the line *x x* of Fig. 1; Fig. 3, a vertical transverse sectional view of the lower part of the machine, taken on the line *y y* of Fig. 2; Figs. 4 and 5, detail views of the escapement devices for automatically moving the carriage transversely; Figs. 6 and 7, detail views of the adjacent faces of the driving-pinion for the carriage and the escapement-wheel, showing the ratchet and spring-actuated pawl; Fig. 8, a detail view showing the ratchet-wheel and spring-actuated pawl for rotating the advancing shaft of the platen; Fig. 9, a vertical sectional view of the upper portion of my machine, showing a slight modification of the method of adjusting the type-bars; Fig. 10, a detail perspective view of one of the jointed type-bars; Fig. 11, a detail view of the device for simultaneously adjusting the type-bars; Figs. 12 and 13, detail views of slightly-modified forms of the type-bar-operating devices; Fig. 14, a detail plan view of the notched ring for supporting and steadying the type-bars; Fig. 15, a detail plan view of the key-board or manual; Fig. 16, a detail view of the thumb-screw and indicator for adjusting the escapement-wheels.

This invention has relation to certain new and useful improvements upon type-writing and matrix-making machines; and it consists in certain novel features of construction and arrangement of parts, that will be fully hereinafter described, and particularly pointed out in the claims appended.

The essential object of the invention is to provide extremely simple and comparatively inexpensive arrangement or system of type bars and levers, whereby the type-bars, by a comparatively light blow or pressure upon the operating-keys, will be positively and forcibly thrown or pressed against the impression-surface, thereby rendering it possible and practicable to produce by the employment of the ordinary finger-operated keys an impact or blow of sufficient force to make deep and well-defined depressions in a stiff, plastic, or other substance to form a matrix from which to make printing-plates, as will more fully hereinafter appear.

The invention is also designed to produce a simple and positive arrangement of devices for automatically adjusting the matrix, as will presently appear.

Referring to the accompanying drawings by letters, A designates a suitable casing and supporting-frame, which is preferably cylindrical in shape, and B the platen for supporting the matrix or impression surface, which platen may either be a flat plate or a cylinder, as may be desired—in this instance a plate being employed.

The type-bars C are preferably each constructed of two sections, *a a'*, hinged together at their connected ends, as shown. Each type-bar is pivotally hung, as shown in Fig. 9, at its upper end to a screw, *b*, provided with a thumb-nut, *b'*, by means of which the type-bars may be independently vertically adjusted in order to regulate the depth or force of their impression. In the present machine the arrangement of type bars and keys is circular; but it is evident that I may arrange them in any desired manner without in the least departing from the invention. In their normal position the lower portions of the type-bars rest in notches in a ring, D, suspended over the platen by means of arms or supports D', this ring serving to confine and concentrate the lower sections of the type-bars, as shown. I adjustably attach, by means of suitable clips, *c*, a funnel-shaped cup, E, to the bottom of the ring D, this funnel serving to guide the type-bars to their proper place upon the impression-surface.

To steadily but yieldingly hold the lower sections of the type-bars in their notches in the ring D, I may employ spiral springs *d*, as shown on the right-hand side of Fig. 9, or small coil-springs *d'*, as shown in Fig. 10. This spring *d'* is preferably placed at the joint of each type-bar and coiled once or

twice around the connecting-pivot, as shown, the two ends of the spring being adapted to press against the inner surfaces of the adjoining ends of the sections of the bar, and automatically and quickly return the lower section to its proper place in the ring D after each operation.

To forcibly operate the type-bars, I employ for each bar a pair of toggle-levers, F, and pivotally connect the inner ends thereof to the type-bars, (preferably near their upper ends, as shown in Fig. 1,) and their outer ends to the interior of the frame A. If it is desired to adjust the toggle-levers laterally, I may pivot their outer ends to suitable screws, *e*, which pass through internally-screw-threaded thumb-nuts journaled or mounted upon the main frame of the machine.

As shown in Fig. 13, the inner ends of the toggle-levers F may be pivotally connected to the joints of the type-bars, in which case the sections of the type-bars themselves will form another toggle.

The toggles are held up in their normal position by means of suitable spiral springs, G. These springs may either connect the toggles with the frame of the machine, as shown in Figs. 1 and 9, or they may be arranged as shown in Figs. 12 and 13, as may be found most practicable. Any other arrangement of springs may be employed for restoring the toggles and type-bars to their normal position without departing from the invention.

The operating-keys K pass down through perforations in the top of the casing and rest upon the toggles at their joints or knuckles, as shown in Figs. 1, 9, and 12, or to one side of the joints, as shown in Fig. 13.

If it is desired to adjust the type-bars simultaneously, they may be pivotally connected at their upper ends to a disk, I, as shown in Figs. 1 and 11, which is adjusted vertically by means of a screw and thumb-nut supported on the top of the casing. By thus constructing the type-bars of two sections and pivotally connecting such sections together at their adjoining ends each type-bar is practically constituted a toggle-lever. Thus constituting each type-bar a toggle in itself and operating each type-bar by means of a toggle-lever it will be obvious that the advantage of a compound toggle is obtained. By this arrangement of toggle-levers and keys, it will be observed, the light force exerted upon the keys will be greatly augmented and increased, and the type-bars will be forcibly projected against the matrix or impression-surface. The machine may be employed either as a matrix-making machine or as a type-writer with equal advantage.

I will now describe the mechanism for automatically operating or adjusting the platen B whenever any one of the keys is operated.

The platen consists of a suitable plate provided upon its under side with a longitudinal rack-bar, *f*. This platen fits snugly and reciprocates between suitable flanges on the side edges of a carriage, J, the carriage being in turn supported upon a pair of transverse rods, *g g*, secured or supported upon the frame of the machine. This carriage is adapted to move back and forth upon these rods, and is normally drawn toward one side of the machine by means of spiral springs *g′ g′*, surrounding the said stationary rods and having their ends secured, respectively, to the frame A and carriage. This carriage is provided with a transverse rack-bar, *h*, on its under side, with which engages a pinion or gear-wheel, K′, mounted loosely on the end of a short horizontal shaft, L, this shaft being supported upon a pedestal, M. This shaft L and pinion K′ are adapted to be adjusted back and forth a limited distance for a purpose presently set forth, and the rack-bar *h* is wide enough to permit this to be done, the said pinion being held constantly in engagement with the rack-bar in whatever position it may be. Also, mounted loosely on the short shaft L, close up to the face of the pinion, is an internally-toothed escapement-wheel, N, and clamped to the face of this wheel N, by means of small clamps *i*, are two or more rings or wheels, N′ N″, similar in construction to the wheel N, but having a different number of internal teeth.

Adapted to engage with the teeth of any one of these is a vertically-vibrating escapement-lever, O, pivoted to a convenient portion of the machine-frame. Pivotally and adjustably connected to this lever O, at a suitable point, is a vertical rod, P, the upper end of this rod being adjustably connected to a vertically-movable ring, Q, which is arranged directly beneath the toggle-levers, and is adapted to be moved down by the same whenever one of the keys K is depressed. The vertical movement of this ring Q is communicated to the escapement-lever through the medium of the rod P, this rod being bent at a suitable point to avoid interference with the platen B.

To prevent noise and disarrangement of the parts, I preferably cushion the upper edge of the ring Q, as shown at *i′*, and to restore the ring and its connected parts to their normal position after each operation I employ spiral springs Q′, which connect the ring to the top of the frame. To steady and guide the ring Q in its vertical movements, I preferably rigidly secure the same to four or more light vertical rods, R, which pass through suitable guiding-apertures in the top of the casing, and are connected together at their lower ends by means of suitable bars, *k*, located below the carriage and platen, out of the way. To further guide and steady the ring in its vertical movements and prevent binding and undue friction, I may employ a vertical pin, R′, in the center of the bottom of the casing and pass the same up through a vertical aperture in one of the bars *k*. The vertical movement of the rods R and ring Q may be regulated by

means of screw taps or nuts upon the upper ends of the said rods R.

The letter S′ designates a transverse horizontal rectangular shaft suitably journaled in the frame of the machine and provided with adjustable collars or stops *n n*, for limiting the transverse movement of the carriage J, through which latter the said shaft freely passes. Mounted upon this rotatable shaft S′, in a recess in the upper face of the carriage, is a pinion, T, which is adapted to rotate with the said shaft, and at the same time be moved along the same with the carriage, as is evident. This pinion T engages the rack-bar *f* on the bottom of the platen, as shown clearly in Fig. 3, and is adapted to advance the same whenever the shaft S′ is rotated. Secured rigidly upon this shaft S′, near one end, is a ratchet-wheel, S, and adapted to engage with the teeth upon the periphery of this wheel is a spring-actuated pawl, *m*, pivoted to the lower end of a vertically-movable rod, L′. This rod L′ passes up through the top of the casing, and is provided with a key, K″, and a stop-collar, *p*, to regulate its vertical movement. This rod is automatically drawn up after each operation by means of a retracting-spring, *p′*. By adjusting the collar *p* upon the rod L′ the distance the platen B is to be advanced can be nicely determined.

The normal position of the escapement-lever is that shown in the detail views, Figs. 4 and 5, in which position it engages one of the upper internal teeth of one of the escapement-wheels N and prevents the spiral springs *g′ g′* from drawing the carriage to one side, the gear-wheel K′ being prevented from turning by means of a spring-actuated pawl, *g″*, secured on the face of the wheel N and engaging an internal ratchet-wheel on the said gear-wheel, as shown clearly in Figs. 1, 6, and 7. This ratchet arrangement permits the carriage to be drawn back to its starting-point after each line of writing is finished without revolving the escapement-wheels, and at the same time causes the cog-wheel and escapement-wheels to rotate in unison while the carriage is moving in the opposite direction. The tendency of the carriage being to move toward the left (Fig. 8) of the machine, it will be observed that every time the escapement-lever is operated the carriage with its matrix will be suddenly and quickly drawn toward the left a sufficient distance to properly "space" the letter being used. To vary the spacing of the letters, I employ two or more of these internally-toothed escapement-wheels and clamp them upon the face of the wheel N, as heretofore described. These additional wheels N′ N″ have teeth of the same size as the wheel N, but are provided with a greater or lesser number, whereby the letters may be brought closer together on the matrix or farther apart, as the exigencies of the case may require. To readily bring any one of the escapement-wheels into engagement with the escapement-lever, I preferably employ a pinion, *s*, which is secured upon the end of a shaft, *s′*, and engages a rack-bar, *t*, formed on the short shaft L. The shaft *s′* is preferably journaled upon an arm, *u*, formed upon the pedestal M, and upon its outer end it is provided with a thumb-disk, *w*, by which it is rotated in either direction. By rotating the pinion *s* the shaft L, carrying the cog-wheel K′ and escapement-wheels, may be readily moved back and forth in its bearing, thus enabling the operator to vary the spacing of the letters at will. To enable the operator to ascertain at a glance just which one of the escapement-wheels is being employed, I provide an indicator, *v*, on the outer end of the said shaft *s*, as clearly shown in Fig. 16. As each line of writing is completed, the carriage is drawn back to its starting-point by hand. When it is desired to advance the platen the space of one line, the operator simply depresses the key K″, which operation, through the medium of the rod L′ and its spring-actuated pawl, ratchet-wheel S, shaft S′, and pinion T, advances the platen the desired distance, the advance movement of the platen taking place upon the return movement of the rod L′, which is drawn up by the spring *p′*.

By means of the hereinbefore-mentioned stop-collar *p* the spaces between the lines may be varied to suit the character of work desired.

As the details of construction of the machine herein described may be varied somewhat without departing from the spirit of the invention, I desire it understood that I do not intend to confine myself to the exact construction shown.

Having thus fully described my invention, what I claim as new, and desire to secure by Letters Patent, is—

1. The combination of a frame, a circular series of toggle-levers, operating-keys connected to the toggles, and a circular series of type-bars pivotally connected to the said toggle-levers, as and for the purpose set forth.

2. The combination of a frame, a circular series of jointed type-bars, means for guiding these type-bars, a series of radial toggle-levers pivotally connected at their inner ends to the said jointed type-bars, operating-keys, and springs for restoring the parts to their normal positions, substantially as described.

3. The combination of a casing, the vertically-adjustable type-bars, the adjustable toggle-levers radially arranged and connected to the said type-bars, and operating-keys connected to the toggle-levers.

4. The combination of a frame, a pivotally-supported jointed type-bar depending from the said frame, a toggle-lever pivotally connected to this depending type-bar, an operating-key connected to the toggle-lever, and a spring for restoring the parts to their normal position, as and for the purpose set forth.

5. The combination of a frame, a depend-

ing pivotally-supported type-bar connected to this frame, this type-bar being constructed of two sections pivotally connected together at their adjoining ends, a toggle-lever, F, pivotally connected at its inner end to the joint or knuckle of the said jointed type-bars, an operating-key resting upon the said toggle-lever, and a spring for restoring the parts to their normal position, whereby the type-bar sections themselves form a toggle, as and for the purpose set forth.

6. The combination of a frame, type-bars, toggle-levers for operating the said type-bars, a vertically-guided ring arranged below the said toggle-levers and operated thereby, a depending operating-rod, P, connected to the said ring, a pivoted escapement-lever connected to rod P, a pinion provided with an internally-toothed escapement-wheel, and a spring-actuated carriage provided with a rack-bar upon its under side controlled by said pinion and escapement, as and for the purposes specified.

7. The combination, with a spring-actuated carriage provided with a rack-bar upon its under side, of a shaft journaled below the said carriage, a pinion upon this shaft and engaging the said rack-bar upon the carriage, two or more internally-toothed escapement-wheels connected to the said pinion, these escapement-wheels being provided with a different number of teeth, means for adjusting the said shaft, an escapement-lever constructed to engage the teeth of the said escapement-wheels, and means for operating the said escapement-lever, substantially as described.

In testimony whereof I affix my signature in presence of two witnesses.

WILLIAM RENNYSON.

Witnesses:
ALFRED L. CAREY,
CHAS. D. DAVIS.

(No Model.)

W. P. KIDDER.

KEY ACTION FOR TYPE WRITING MACHINES.

No. 567,241. Patented Sept. 8, 1896.

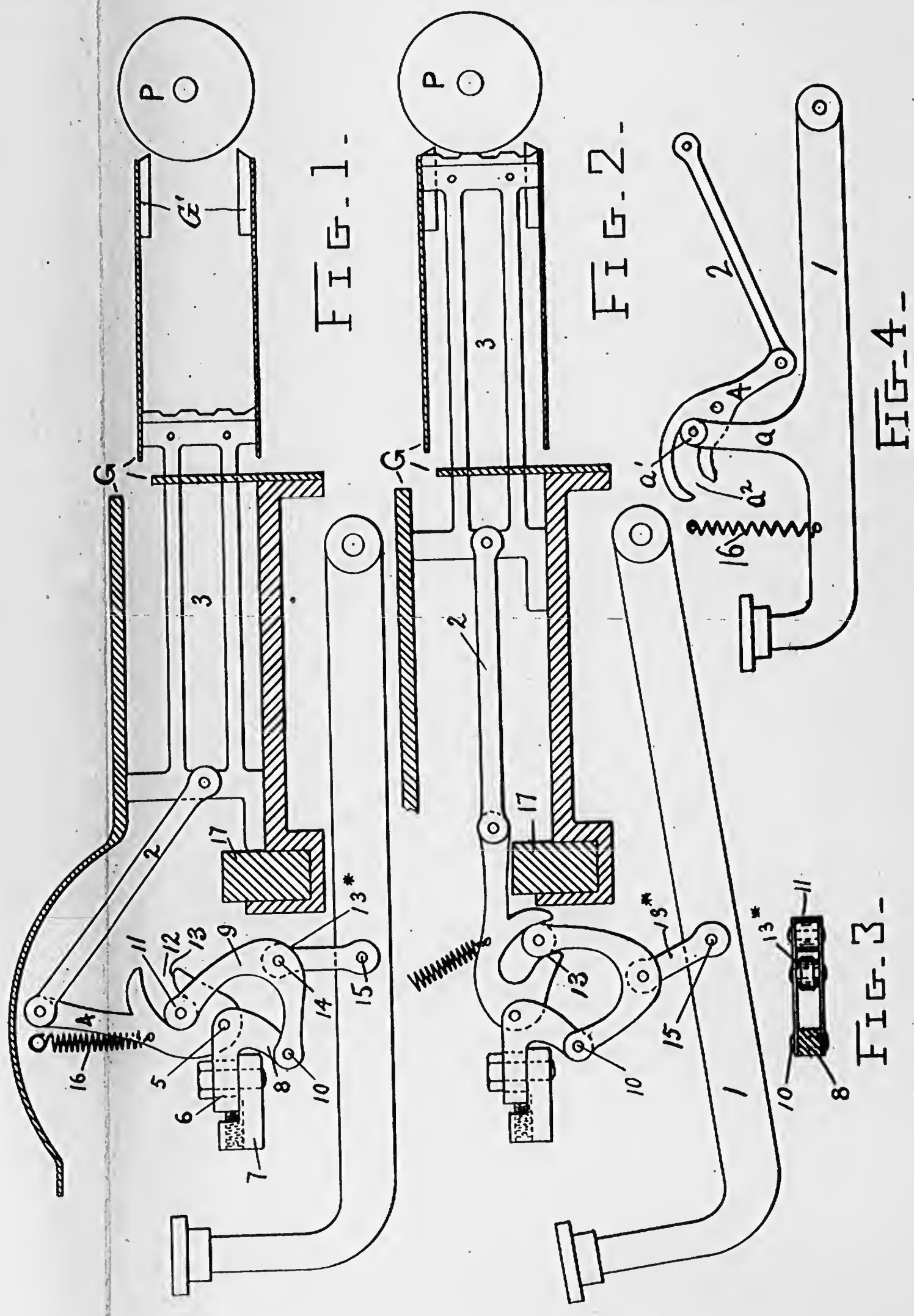

WITNESSES:
Fred W. McArdle.
A. P. Carder.

INVENTOR:
Wellington P. Kidder,
by his attorney
Edmund S. Beach.

UNITED STATES PATENT OFFICE.

WELLINGTON P. KIDDER, OF BOSTON, MASSACHUSETTS, ASSIGNOR TO WELLINGTON P. KIDDER, OF SAME PLACE, AND CHARLES R. BISHOP, OF NEW HAVEN, CONNECTICUT, TRUSTEES.

KEY-ACTION FOR TYPE-WRITING MACHINES.

SPECIFICATION forming part of Letters Patent No. 567,241, dated September 8, 1896.

Application filed June 12, 1894. Renewed January 31, 1896. Serial No. 577,633. (No model.)

To all whom it may concern:

Be it known that I, WELLINGTON PARKER KIDDER, of Boston, in the county of Suffolk and State of Massachusetts, have invented a new and useful Improvement in Key-Actions for Type-Writing Machines, of which the following is a specification, reference being had to the accompanying drawings, in which—

Figure 1 is a side elevation illustrating my new key-action, the parts being in their position of rest. Fig. 2 is a similar elevation showing the key depressed and type at impression-point. Fig. 3 is a plan of a swinging arm forming a portion of my new action. Fig. 4 shows a modification.

The object of my invention is to produce a key-action suitable for embodiment in type-writing machines which are comparatively noiseless in operation.

In the drawings, 1 represents a key, and 2 a link connecting the end-thrust type-bar 3 with the swinging lever 4, which is pivoted at 5 to a bracket 6, secured on frame 7. Bracket 6 is provided with an extension 8, to which cam-roll carrier 9 is pivoted at 10. Carrier 9 is provided with a cam-roll 11, moving in the cam-path 12, with which lever 4 is provided. A portion 13 of the cam-path is on a radius with the center 10, in which position the toggle is exactly on the centers. (See Fig. 2.) A link 13* connects the cam-carrier 9 with the key-lever 1, being pinned to the carrier 9 and key-lever 1 at 14 and 15, respectively. A returning-spring 16 is interposed between swinging lever 4 and the frame of the machine in any suitable manner, as will be plain to all skilled in the art without more particular description.

Any suitable arrangement of platen P and type-bar guides G may be employed, but it is of the greatest importance that portion G' of the guide should be of such construction that the type-carrier is compelled to move immediately prior to actual impression straight toward the platen, and that the type-carrier be held unwaveringly at its type end during actual impression.

When the key-lever is depressed, swinging arm 9 pulls upon swinging lever 4 against tension spring 16 and cam-roll 11 is caused to traverse cam-path 12 into the position shown in Fig. 2, at which time the toggle is on its centers, the link 2 thus pushing the endwise-moving type-bar into its printing position. The parts are returned to position by spring 16, the heel of the type-bar striking against a soft pad 17 on its return. The marked advantages of this movement are that the toggle is brought on its centers with multiplied power as the cam-roll traverses the inclined plane of its cam-path; that the toggle is brought positively to its exact centers without the concussion of any part with a stop; that as the toggle approaches its centers the velocity is gradually diminished until the parts reach a full stop—that is, until the type-bar reaches the impression-point, so that the type are brought to the paper practically without any noise whatever.

My invention may be embodied in type-writing machines of many different constructions, but I have herein shown it in connection with an end-thrust type-bar.

In Fig. 4, showing a modification, the key-lever is provided with an arm a, provided with a cam-roll a', which works in a camway a^2, formed in the swinging lever 4, which is pivoted in any suitable manner.

The invention above set forth is an improvement on that described in my pending application, Serial No. 508,614, filed April 23, 1894. In that case I set forth a key-action wherein the type-head is pushed to impression while the toggle is straightening without the use of the cam herein mentioned.

What I claim is—

1. In a type-writing machine, the combination of a platen; a type-carrier; a key for straightening the toggle; a toggle connected with the type-carrier and, while straightening, pushing the type to impression; cam mechanism connecting the toggle and key, whereby movement of the key causes the cam mechanism to bring the toggle substantially on its pivots, the pivots of the toggle being substantially in one and the same line with each other at the instant of impression to print by pressure without concussion, all substantially as and for the purpose set forth.

2. In a type-writing machine, the combina-

tion of a platen; a type-carrier; a key for straightening the toggle; a toggle connected with the type-carrier and, while straightening, pushing the type to impression; cam mechanism connecting the toggle and key whereby movement of the key causes the cam mechanism to bring the toggle substantially on its pivots; and a type-carrier guide which compels the type-carrier to move straight against the platen immediately preceding impression and which holds the type positively at the impression, the pivots of the toggle being substantially in one and the same line with each other at the instant of impression to print by pressure without concussion, all substantially as and for the purpose set forth.

3. In a type-writing machine, the combination of a platen; a type-carrier; a toggle for pushing the type-carrier at the impression-point; and a key for straightening the toggle, with a cam-operating mechanism controlled by movement of the key, the cam mechanism being operative to straighten the toggle, the pivots of the toggle being substantially in one and the same line with each other at the instant of impression, to print by pressure without concussion, substantially as and for the purpose set forth.

4. In a type-writing machine, the combination of a type-carrier; a platen; a key; a toggle and cam mechanism, the toggle straightening on its pivots by movement of the key, through the instrumentality of the cam mechanism when impression is given, the pivots of the toggle being substantially in one and the same line with each other at the instant of impression to print by pressure without concussion, substantially as set forth.

5. In a type-writing machine, the combination of a platen; a type-bar; and a key-lever, with an intermediate toggle, one member of which pushes the type-bar, the cam operating directly on the toggle to straighten it, and being connected with the type-lever, the pivots of the toggle being substantially in one and the same line with each other, at the instant of impression, to print by pressure without concussion, substantially as and for the purpose set forth.

6. In a type-writing machine, the combination of a platen; a type-bar guide; a type-bar; a toggle, one member of which is pivoted to the type-bar, and a second member of which is pivoted to the machine, and provided with a cam-path; a cam-roll working in the cam-path; a swinging carrier for the cam-roll; a link connecting the cam-roll carrier with a key-lever; and a key-lever, substantially as and for the purpose set forth.

7. In a type-writing machine, the combination of a platen; a type-bar guide; a type-bar, and a key-lever with an intermediate toggle mechanism for pushing the type-carrier at impression, the toggle being provided with a cam-path; a swinging cam-roll carrier having a cam-roll working in said path, the swinging cam-roll carrier actuated by the movement of the key to straighten the toggle; the cam-path being so formed that, when the pivots of the toggle are brought into substantially the same line with each other, the velocity of the type-bar is gradually diminished until the type-bar reaches the impression-point so that the type are brought to the paper without concussion, substantially as and for the purpose set forth.

8. In a type-writing machine, the combination of a platen; a type-bar guide; an endwise-moving type-bar; a toggle, one member of which is pivoted to the endwise-moving type-bar, and the second member of which is provided with a cam-path and pivoted in the machine; a swinging cam-roll carrier provided with a cam-roll; a link connecting the swinging cam-roll carrier with a key; and a key; the cam-path having a part struck on the radius of a circle from the pivotal point of the swinging cam-roll carrier, all so arranged that, when the pivots of the toggle are brought into substantially the same line with each other, by movement of a key, the cam-roll is on that part of the cam-path which is struck from the pivotal point of the cam-roll carrier as a center, substantially as and for the purpose set forth.

WELLINGTON P. KIDDER.

Witnesses:
EDWARD S. BEACH
A. L. CRAWFORD.

(No Model.)

2 Sheets—Sheet 1.

W. P. KIDDER.

TYPE WRITING MACHINE.

No. 567,242.

Patented Sept. 8, 1896.

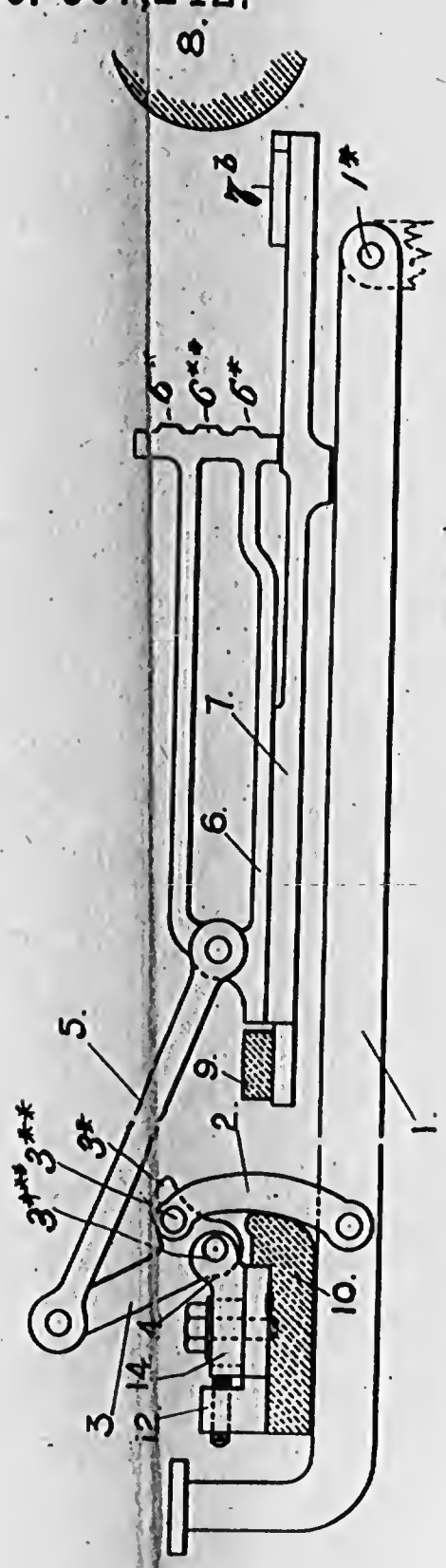

FIG. 1.

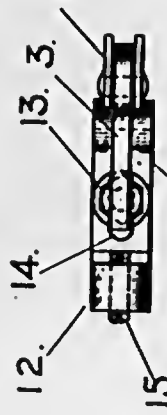

FIG. 2.

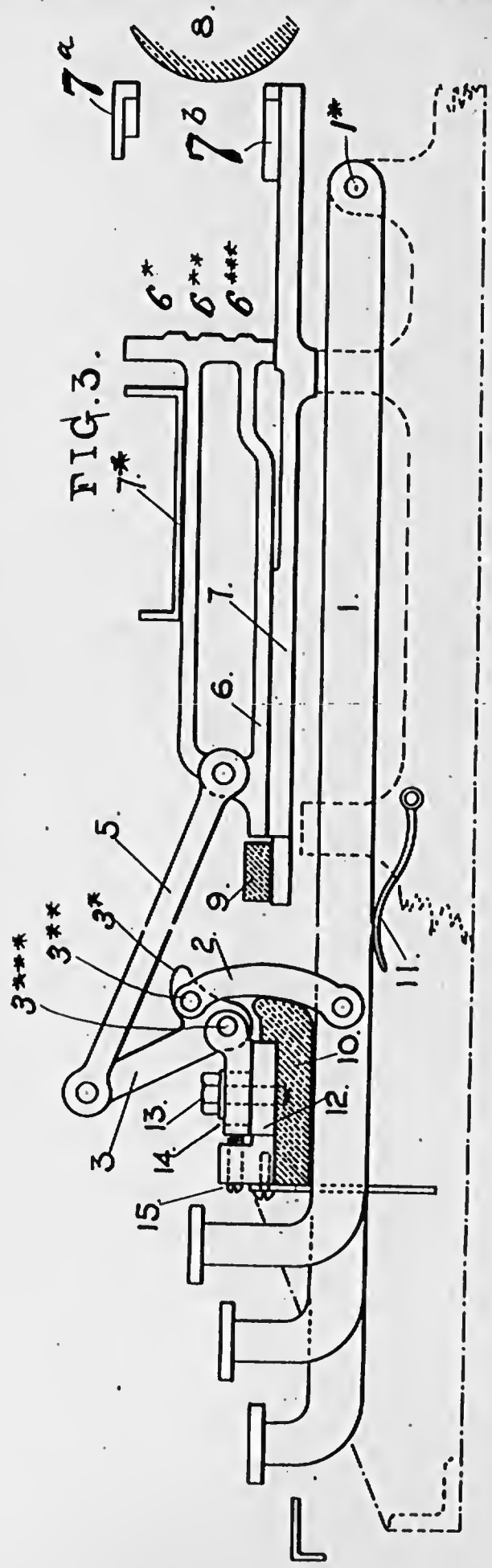

FIG. 3.

WITNESSES:
David Rice
B. Early.

INVENTOR
Millington P. Kidder
BY
Edward S. Beach
ATTORNEY.

360

(No Model.)

2 Sheets—Sheet 2.

W. P. KIDDER.

TYPE WRITING MACHINE.

No. 567,242.

Patented Sept. 8, 1896.

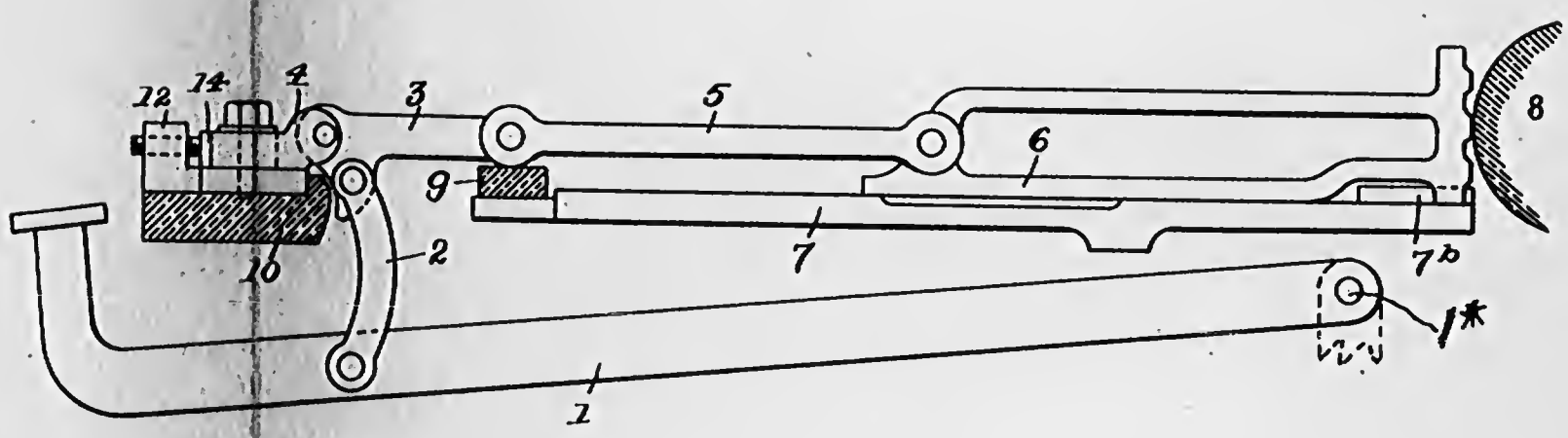

Fig. 2.a

WITNESSES.

R. F. Crawford.

L. P. Slade.

INVENTOR.

Willington P. Kidder

by his attorney

Edward S. Beach

UNITED STATES PATENT OFFICE.

WELLINGTON P. KIDDER, OF BOSTON, MASSACHUSETTS, ASSIGNOR TO WELLINGTON P. KIDDER, OF SAME PLACE, AND CHARLES R. BISHOP, OF NEW HAVEN, CONNECTICUT, TRUSTEES.

TYPE-WRITING MACHINE.

SPECIFICATION forming part of Letters Patent No. 567,242, dated September 8, 1896.

Application filed April 23, 1894. Renewed July 8, 1896. Serial No. 598,485. (No model.)

To all whom it may concern:

Be it known that I, WELLINGTON P. KIDDER, of Boston, in the county of Suffolk and State of Massachusetts, have invented a new and useful Improvement in Type-Writers, of which the following is a specification, reference being had to the accompanying drawings, in which—

Figures 1 and 2 exhibit my invention disconnected from the old structure upon which it is an improvement, Fig. 1 being a side view of my new toggle-joint connection for a type-carrier and key-lever, with other features of my invention, and Fig. 2 being a top plan of what is shown in Fig. 1. Fig. 2^a is a view showing the type-bar in printing position and the members of the toggle and their pivots in line with each other. Fig. 3 is a sectional elevation showing so much of an old structure as will suffice to show the connection of my present invention therewith.

My invention is an improvement in type-writers of the end-thrust type-bar class set forth in my Letters Patent Nos. 471,794 and 471,795, both granted March 29, 1892, and in my pending applications, Serial Nos. 468,607, filed March 31, 1893, and 506,444, filed April 3, 1894; but the different features of my invention may be embodied, if desired, in other styles and kinds of type-writing machines, and I wish to be understood as herein claiming my invention in the broadest manner that is legally permissible.

The object of my invention is to produce an approximately noiseless type-writing machine and also one in which the impression is given by a dwelling pressure rather than by a quick sharp blow.

An important feature of my construction consists in the combination of a platen and impression key-lever with an end-thrust type-carrier and toggle, the toggle members and type-carrier being substantially in a straight line when the impression is taken.

The particular features of my invention are pointed out hereinafter.

In the drawings, in which I show my invention embodied in a type-writer of the kind set forth in my said Letters Patent, this being one of many contemplated embodiments of my invention and the best form now known to me, 1 is the impression key-lever, adapted to be pivoted to any suitable support; 2, a link pivoted thereto and to a rocker-arm 3, which is pivoted to any suitable support 4.

Rocker-arm 3 is provided with a projection 3* for the pivotal attachment at 3** of the link 2 at one side of the pivot or center 3***, so that when link 2 is pulled down to straigthen the toggle members 3 and 5 the pull on the rocker-arm or toggle member 3 is not on a dead-center and the parts are readily operated to move the type head or carrier 6 to impression. Rocker-arm 3 forms one member of a toggle, the other member thereof being link 5, which is pivoted to the rocker-arm 3 and also to the end-thrust type-carrier 6, which is provided with a suitable table or ledge-like guide-support 7, that supports, and with an upper guide 7*, that helps to direct and control, the type-carrier in its endwise movement to and from the platen 8. Depression of key-lever 1 draws link 2 downwardly, and rocker-arm 3 is thereby swung forward, bringing link 5 in line with the type-carrier 6, connected thereto. When rocker-arm 3 completes its full movement, it is in line with link 5 and the type-carrier presses against the platen 8, being guided thereto by the table or ledge-like guide-support 7, of any suitable construction. This guide 7 supports the type-carrier 6 during the forward and back movements thereof, while guides 7^a and 7^b, which are placed at the impression-point, compel the type-head to contact unwaveringly with and to run straight against the platen.

The toggle action of rocker-arm 3 and link 5 is such that the impression is obtained by a pressure which is characterized by a slight dwell as distinguished from a quick sharp blow and from a rocking movement of the type on the paper that renders impression indistinct and blurred. To accomplish this valuable result, the forward or impression-giving movement of the type-carrier is arrested at the instant of impression, the type-

carrier and link 5 and rocker-arm 3, in other words, the type-carrier and toggle members, being made of the length requisite for this purpose. This is my preferred construction but I do not limit my invention to this specific feature.

To insure a minimum of noise in the operation of the machine, I mount a pad 9 (say, of rubber) in the path of the link 5, against which the link strikes when in line with the type-carrier 6, and place another pad 10 back of link 2, so that the link 2 strikes against a pad on its back stroke. The key-lever 1 and connected parts referred to are returned to their position of rest by spring-pressure, as will be readily understood by all skilled in the art, although for the sake of more clearly showing the operation of my new toggle connection I show a spring 11 interposed between the key-lever and bottom of the machine; but it will of course be understood that the spring return of the key may be obtained in many different ways without departing from my invention.

In the construction shown, the key-lever 1 extends from the front or key-board side of the machine rearwardly underneath or at one side of the table or ledge-like supporting-guide 7, and is pivoted to the machine at 1* well toward the platen. Type head or carrier 6 is provided with a plurality of characters at 6*, 6**, and 6***, and the table or ledge-like guide-support 7 is common to a plurality of type-heads, as described in my said Letters Patent, including No. 471,795, dated March 29, 1892, and as shown in the well-known "Wellington type-writer," now made under my patents. The support 7 is preferably horizontal, as shown.

In order to secure approximately exact uniformity of impression, I provide means for adjusting and controlling the throw of the type-carrier. By so doing, a period, for example, is made to print without injury to the paper, and all the types are brought into such nice relation one with the other that each gives its impression with reference to the formation of its work-surface and that of the other types. To accomplish this important and valuable result in the particular form of machine shown, I make support 4 adjustable and clamp it upon a rest 12 by means of a clamping-screw 13, passing through a slot 14 in support 4 and entering rest 12, which is provided with a set-screw 15, which engages the butt-end of support 4. By loosening clamping-screw 13 support 4 is readily moved into any desired position on its rest 12 and secured in the desired position by the clamping-screw 13 and set-screw 15, whereby the range of movement of the type-carrier is adjusted and controlled. It will be readily understood by all skilled in the art that this adjustment may be obtained in many different ways, and I do not limit myself to any special form of means for adjusting the movement of the type-carrier in relation to the platen.

In Fig. 3 I show the parts above described in connection with so much of my "Wellington" machine set forth in my said Letters Patent as is necessary to show the connection of the features of my present invention with what precedes it in the art.

It will be seen that the end joints of the toggle are in a straight line with the platen at all times, and that all three of the toggle-joints are in the same straight line when the type head or carrier is at impression.

What I claim is—

1. In a type-writing machine, the combination of a platen and impression key-lever with an intermediate end-thrust type-carrier and toggle operatively connected together and with the impression key-lever and a ledge-like type-carrier support intermediate the platen and the free end of the key-lever, the toggle driving the type-carrier to impression, but arresting the impression-stroke of the type-carrier at the instant of impression, substantially as and for the purpose set forth.

2. In a type-writing or like machine, the combination of a platen and impression key-lever with an intermediate end-thrust type-carrier and toggle operatively connected together and with the impression key-lever, a guide-support for the type-carrier; the impression-key being pivoted at one side of the guide-support, and a link connecting a toggle member with the impression key-lever; the joints of the toggle being in a substantially straight line at impression, substantially as and for the purpose set forth.

3. In a type-writing or like machine, the combination of a platen and impression key-lever with an intermediate end-thrust type-carrier and toggle operatively connected together and with the impression-key; a guide-support for the type-carrier during its movement from and toward the platen, a link connecting the impression key-lever with a toggle member and a guide, at the impression-point, for the head of the type-carrier, substantially as and for the purpose set forth.

4. In a type-writing or like machine, the combination of a platen and impression key-lever with an intermediate end-thrust type-carrier and toggle operatively connected together and with the impression key-lever, a link which connects the impression key-lever with a toggle member at one side of a pivotal connection thereof and a guide-support for the type-carrier during its movement from and toward the platen, substantially as and for the purpose set forth.

5. In a type-writing or like machine, the combination of a platen and impression key-lever with an intermediate end-thrust type-carrier and toggle operatively connected together and with the impression key-lever, ledge-like support for the type-carrier; a link connecting a toggle member with the impres-

sion key-lever which is pivoted at one side of said ledge-like support, and a guide at the impression-point, for the head of the type-carrier, substantially as and for the purpose set forth.

6. In a type-writing or like machine, the combination of a platen, and impression key-lever with a toggle and end-thrust type-carrier; a link connecting a member of the toggle with the impression key-lever, and a guide at the impression-point for the head of the type-carrier, the link extending across the plane of the path of the type-head from one toggle member to the impression key-lever pivoted at one side of said plane, substantially as and for the purpose set forth.

7. In a type-writing or like machine, the combination of a platen and impression key-lever with an end-thrust type-carrier and toggle; a link connecting a toggle member with the impression key-lever; a guide-support for the type-carrier during its movement from and toward the platen; a pad for the toggle when straightened; and a pad at the rear of said link against which the link strikes on its back stroke, all substantially as and for the purpose set forth.

8. In a type-writing or like machine, the combination of an end-thrust type-carrier, a horizontal ledge-like guide-support therefor during its movement from and toward the platen; a toggle and impression key-lever; a link connecting the toggle with the impression key-lever which is pivoted toward the platen, at one side of said support and extends forwardly beyond said support; and an adjustable bracket to which one toggle member is pivoted, the other toggle member being pivoted to the type-carrier, substantially as and for the purpose set forth.

9. In a type-writing machine, the combination of an impression-key; a link connected therewith; a toggle, one member of which is pivoted in the machine and connected with said link; a type-carrier with which the other member of said toggle is connected; a type-carrier guide comprising a table or ledge across which the type-carrier moves; and a platen; said table being between the platen and the front of the machine, and the impression-key being pivoted at one side of said table, substantially as and for the purpose set forth.

10. In a type-writing machine, the combination of a platen; a type-head; guides to control the type-head at impression; a table or ledge-like support for the type-head during its movements from and toward the platen; a toggle, one member of which is connected with the type-head and the other member of which is pivoted in the machine; the centers of the toggle being at one side of said support; an impression-key pivoted at the other side of said support, and a link connecting said impression key-lever with one of the toggle members, substantially as and for the purpose set forth.

11. In a type-writing machine, the combination of a platen; a type-head; guides to control the type-head at impression; a table or ledge-like support for the type-head during its movements from and toward the platen; a toggle, one member of which is connected with the type-head and the other member of which is pivoted in the machine, the centers of the toggle being at one side of said support and a toggle member having a projection; an impression-key pivoted at the other side of said support, and a link connecting said impression key-lever with said projection on a toggle member, substantially as and for the purpose set forth.

12. In a type-writing machine, the combination of a type-head and a support therefor with an impression key-lever; a toggle, one member of which is pivoted in the machine and the other member of which is operatively connected with the type-head; a link connecting the impression key-lever with a toggle member; and a spring which returns the type-head and toggle to position of rest, after impression; the impression key-lever being pivoted at one side of said support and the toggle and type-head being on the other side thereof, substantially as and for the purpose set forth.

WELLINGTON P. KIDDER.

Witnesses:

WENDELL A. ANDERSON,

O. M. STANTON.

364

No. 735,000. PATENTED AUG. 4, 1903.

J. J. GREEN.

TYPE WRITING MACHINE.

APPLICATION FILED JUNE 12, 1902.

NO MODEL.

Fig. 1.

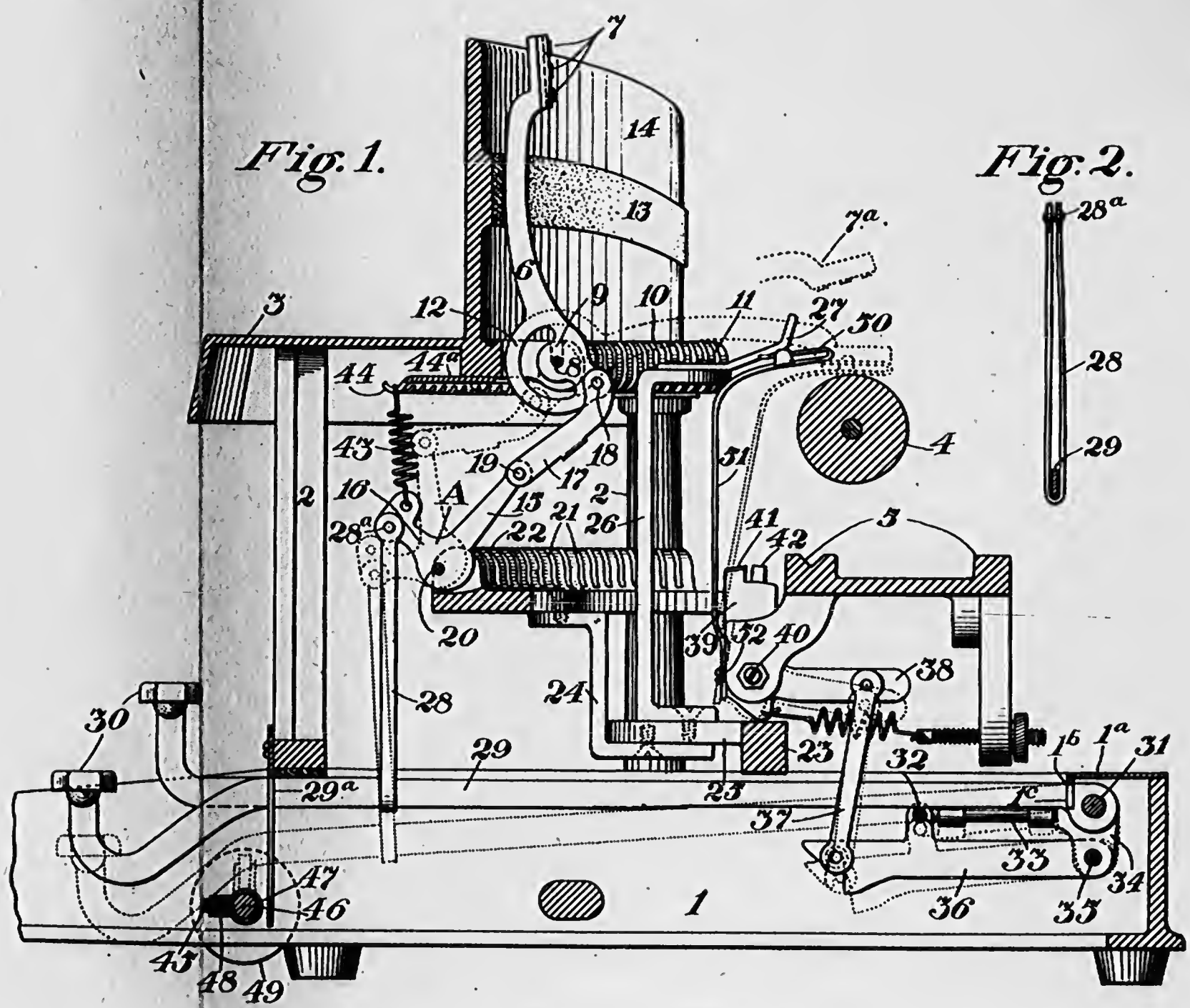

Fig. 2.

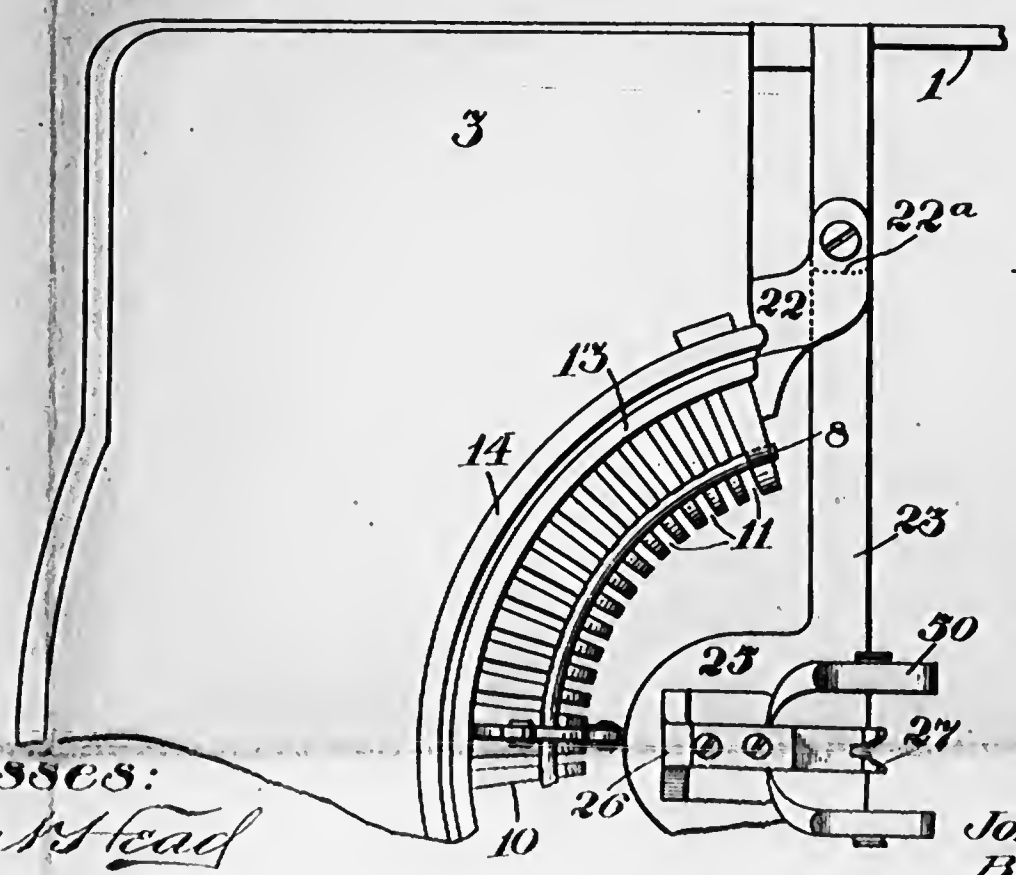

Fig. 3.

Witnesses:
Robert S. Lead
B. C. Stickney.

Inventor:
John Jay Green,
By his Attorney,
F. H. Richards.

No. 735,090. Patented August 4, 1903.

UNITED STATES PATENT OFFICE.

JOHN JAY GREEN, OF BOONTON, NEW JERSEY.

TYPE-WRITING MACHINE.

SPECIFICATION forming part of Letters Patent No. 735,090, dated August 4, 1903.

Application filed June 12, 1902. Serial No. 111,249. (No model.)

To all whom it may concern:

Be it known that I, JOHN JAY GREEN, a citizen of the United States, residing in Boonton, in the county of Morris and State of New Jersey, have invented certain new and useful Improvements in Type-Writing Machines, of which the following is a specification.

This invention relates to writing-machines, and especially to those of the top-strike variety; and its objects are to improve the touch of the keys, to provide means for throwing into action at will a stop for arresting the keys before the types strike the platen, so as to prevent undue or irregular indentation of the paper by the types, and also to improve the connection between the keys and the type-bars.

In the drawings forming a part of this specification, Figure 1 is a longitudinal sectional elevation of a top-strike writing-machine embodying my improvements. Fig. 2 is an edge view of an improved connecting-rod, showing its relation to the key-lever; and Fig. 3 is a partial plan of the machine.

In the several views similar parts are designated by similar characters.

The frame of the machine may comprise a rectangular base 1, carrying corner-posts 2, which support a top plate 3. A platen 4 is mounted on a carriage, (not shown,) which runs upon ways 5, carried upon the framework. A series of rearwardly and downwardly striking type-bars 6, each provided with a plurality of types 7, is pivoted upon a fulcrum-wire 8, mounted in a curved slot 9, formed in a horizontal segment 10, the latter having radial slots 11 for receiving the hubs of type-bars and said hubs preferably having forwardly of their pivots a sector portion 12, which works in slots 11 and steady the type-bars. The latter normally rest against a pad 13, carried upon the rear or inner side of a curved plate 14, rising from the top plate, and the plane of the fulcrum-wire 8 being substantially horizontal the type-bars are in consequence disposed about a vertical axis, although the terms "vertical" and "horizontal" as used in the specification and claims are relative and connote the disposition of the series of key-levers, which in the position in which the machine is ordinarily used and operated is horizontal.

The type-bars are actuated by radial bell-cranks A, each consisting of an upwardly and rearwardly extending arm 15 and a forwardly-extending arm 16, the former being connected by a link 17 to the type-bar at 18, the point of connection of arm 15 to the link being designated as 19. Said bell-cranks A are mounted at their lower ends upon a curved fulcrum-wire 20, preferably concentric with the type-bar fulcrum-wire 9, and work in slots 21, formed in a fixed horizontal segment 22, arranged below the type-bar segment 10 and having a considerably larger radius. Said segment 22 may be suitably supported at its ends, as by standards 22^a, carried by a transverse bar 23, mounted upon the base, and may also be supported midway of its ends by a bracket 24 to a forwardly-extending lug 25, midway of said bar 23. Said lug may also carry an upright 26, having at its upper end a type-bar guide 27.

The short arms 16 of the bell-cranks A are connected by suspended links 28 to substantially parallel key-levers 29 of the second order, said levers bearing at their forward ends keys 30 and at their rear ends being pivoted to a transverse fulcrum-rod 31, which is mounted at its ends on the side walls of the base.

It will be noted that the key-levers being parallel and the bell-crank levers radial each of the former is in general disposed at an angle to the plane of the radial bell-crank lever connected to it, although obviously this may not be the case with the particular key lever or levers which happens to lie in line with the printing-point.

Each of the links 28 is formed in a long strip and folded about midway of its length and is caught, stirrup-like, beneath the key-lever, as illustrated at Figs. 1 and 2. The upper end of the segment forks the bell-crank A and is pivoted thereto at 28^a. This permits of ready assembling or disassembling, since after the bell-cranks and links are put in place the key-levers may be inserted through the loops.

The rear part of the base is provided with

a cover-plate 1[a], whose forward edge is bent down at 1[b] and slotted at 1[c] to form a guide-comb for the rear end of the levers, while the forward ends of the levers are provided with the usual guide-comb 29[a].

A universal bar 32 extends beneath the key-levers and is mounted by arms 33 upon the fulcrum-rod 31, the universal-bar frame also comprising elbows 34 upon the arms 33, said elbows being connected by a tie-rod 35. About midway the rods 32 and 35 are connected by a brace 36, which by means of a vertical link 37 is connected to the rearwardly-extending arm 38 of a dog-rocker 39, the latter being pivoted at 40 upon the frame and carrying a detent 41 and feeding-dog 42, whereby the latter feeding movements of the carriage are controlled.

In operation a key 30 is depressed and the key-lever is swung downwardly about the fulcrum 31, and through the link 28 the arm 16 of the bell-crank A is pulled down and the other arm 15 thereof is drawn forwardly, causing the link 17 to pull the type-bar down to print, all as shown in dotted lines. Upon release of the key from pressure the several parts are returned to normal position by a draw-spring 43, the lower end whereof is hooked to the arm 16 and the upper end whereof engages one of a circular series of hooks or teeth 44, carried upon the forward edge of a segmental comb 44[a], secured upon the under surface of the type-segment 10.

Normally the pivot-points 18, 19, and 20 are nearly in line, whence it follows that the initial leverage of the bell-crank A, and hence of the finger-key 30, upon the type-bar is very great, so that the latter is started in motion gently, thereby softening the touch of the keys. While the movement is continuous, the leverage decreases and the relative movement of the type-bar increases, so that the stroke of the key is not unduly deep. It is also noted that the system of key-levers 29 is considerably wider than the system of type-bars 6, but of about the same width as that of the intermediate system of bell-cranks A, so that said key-levers may be connected to said bell-cranks by substantially vertical links 28, while the bell-cranks, being radially arranged and working in substantially vertical planes, have uniform direct-acting connections to the type-bars, as illustrated. Thus movement is transmitted from the key to the type-bars without liability of side strains or binding of any of the parts in their bearings or guides, and hence freedom of action and durability are secured.

Extending across the machine beneath the forward ends of the key-levers is a padded stop 45, mounted upon a rock-shaft 46 and common to all the keys. A longitudinal tubular casing 47 clasps said shaft and is extended to form a pair of opposite ribs or plates 48, between which the pad 45 is held. The shaft is provided with a button 49, preferably outside of the base, whereby the shaft may be turned at will from a horizontal position of disuse (illustrated in full lines) to a vertical position of use, (indicated in dotted lines.) In the latter position said pad intercepts the key-levers at about the time the types reach the position indicated at 7[a] in dotted lines or just before the completion of the printing-strokes. The type-bars complete the strokes by inertia and rebound from the platen. By means of this improvement undue indentation of the paper by the types is prevented and uniformity of impressions is assured, while the speed of operation is increased.

A ribbon-guide 50 may be carried by a stem 51, fixed at 52 to the dog-rocker, so as to vibrate to and from the printing-point at each impression.

I claim—

1. In a type-writing machine, the combination with a system of type-bars radially disposed about a vertical axis and each pivoted to swing about a substantially horizontal axis, of a system of radially-disposed levers, one for each of the type-bars, pivoted beneath said type-bars to also swing about substantially horizontal axes, a system of links connecting the radially-disposed type-bars with their respective radially-disposed levers, a system of key-levers located beneath said radially-disposed levers each key-lever being in general disposed at an angle to the plane of its said radially-disposed lever, and a system of links extending from said key-levers to said radially-disposed levers.

2. In a type-writing machine, the combination with a system of downwardly and rearwardly striking type-bars radially disposed about a vertical axis and each pivoted to swing about a substantially horizontal axis, of a system of radially-disposed levers pivoted beneath said type-bars to also swing about substantially horizontal axes, a system of links connecting said levers to said type-bars, a system of substantially parallel key-levers extending beneath said radially-disposed levers, and a system of links extending from said key-levers to said radial levers.

3. In a type-writing machine, the combination with a system of downwardly and rearwardly striking type-bars radially disposed about a vertical axis and pivoted upon a segment in a curve the plane of which is substantially horizontal, of a larger segment mounted beneath said type-bar segment and substantially concentric therewith, a series of bell-cranks pivoted in said larger segment, links connecting said bell-cranks to said type-bars, and key-operated devices comprising substantially parallel levers also connected to said bell-cranks for vibrating them.

4. In a type-writing machine, the combination with a system of downwardly and rearwardly striking type-bars radially disposed about a vertical axis and pivoted upon a segment in a curve the plane of which is sub-

stantially horizontal, of a larger segment mounted beneath said type-bar segment and substantially concentric therewith, a series of bell-cranks pivoted upon said larger segment, links connecting said bell-cranks to said type-bars, a system of substantially parallel horizonal key-levers of the second order arranged beneath said bell-cranks and links connecting said key-levers to said bell-cranks.

5. In a type-writing machine, the combination with a system of downwardly and rearwardly striking radial type-bars pivoted in a curve upon a segment forwardly of the printing-point, of a larger segment mounted beneath said type-bar segment and substantially concentric therewith, a series of bell-cranks pivoted in said larger segment, links connecting said bell-cranks to said type-bars, key-operated devices comprising substantially parallel levers also connected to said bell-cranks for vibrating them, a segmental comb attached to said segment, and a series of draw-springs extending upwardly from said bell-cranks and caught upon the teeth of said comb.

6. In a type-writing machine, the combination with a series of type-bars radially disposed about a vertical axis, of a series of radially-disposed levers each disposed in the plane of its respective type-bar, links connecting said levers to said type-bars, and key-operated devices connected to said levers, said levers and links normally forming substantially closed toggles.

7. In a type-writing machine, the combination with a series of type-bars radially disposed about a vertical axis, of radial levers each disposed in the plane of its respective type-bar and having an arm which extends toward its type-bar, a series of links extending from said arms to said type-bars, said links and arms forming substantially closed toggles, and a series of key-levers connected to said radial levers.

8. In a type-writing machine, the combination with a series of type-bars radially disposed about a vertical axis, of radial levers each disposed in the plane of its respective type-bar and having an arm which extends toward its type-bar, a series of links extending from said arms to said type-bars, said links and arms normally forming substantially closed toggles, and a series of substantially parallel key-levers connected to said radial levers.

9. In a type-writing machine, the combination with a series of radial type-bars and a series of radial levers, said type-bars being pivoted in an arc and said levers being pivoted in an arc of materially larger radius than said type-bar arc, radial links connecting said levers to said type-bars, and a series of keys connected to said levers; said levers and links normally forming substantially closed toggles which extend diagonally from said lever-pivots to the points of attachment of said links to said type-bars.

10. In a type-writing machine, the combination with a system of rearwardly and downwardly striking radial type-bars pivoted in a curve forwardly of the printing-point, of a system of radial levers pivoted in a curve beneath said type-bars and connected thereto, a system of key-levers extending rearwardly beneath said levers, said system of radial levers being substantially equal in width to said system of key-levers, and a system of vertical links extending from said key-levers to said radial levers; said type-bars being connected to radial levers by means of devices which automatically decrease the leverage of the keys upon the type-bars during the printing strokes.

11. In a type-writing machine, the combination with a system of downwardly and rearwardly striking radial type-bars pivoted in a curve forwardly of the printing-point, of a system of radial levers pivoted in a curve beneath said type-bars, a system of radial links connecting said levers to said type-bars, a system of key-levers extending rearwardly beneath said levers, said system of radial levers being substantially equal in width to said system of key-levers, and a system of links extending from said key-levers to said radial levers; said levers being connected to said type-bars by means of links, and said links and levers normally forming substantially closed toggles.

12. In a type-writing machine, the combination with a system of rearwardly and downwardly striking radial type-bars pivoted in a curve upon a segment forwardly of the printing-point, of a segment of larger radius mounted beneath said type-bar segment and substantially concentric therewith, a series of bell-cranks pivoted in said larger segment, links connecting said bell-cranks to said type-bars, and a key-operated device also connected to said bell-cranks for vibrating them; said levers being connected to said type-bars by means of links, and said links and levers normally forming substantially closed toggles.

13. In a type-writing machine, the combination with a system of rearwardly and downwardly striking radial type-bars pivoted in a curve upon a segment forwardly of the printing-point, of a segment of larger radius mounted beneath said type-bar segment and substantially concentric therewith, a series of bell-cranks pivoted in said larger segment, said levers being connected to said type-bars by means of links, and said links and levers normally forming substantially closed toggles, a system of substantially parallel horizontal key-levers of the second order arranged beneath said bell-cranks, and links connecting said key-levers to said bell-cranks.

14. In a type-writing machine, the combination with a system of rearwardly and downwardly striking radial type-bars pivoted in a

curve upon a segment forwardly of the printing-point, of a segment of larger radius mounted beneath said type-bar segment and substantially concentric therewith, a series of bell-cranks pivoted in said larger segment, said levers being connected to said type-bars by means of links, and said links and levers normally forming substantially closed toggles, key-operated devices also connected to said bell-cranks for vibrating them and a series of springs connected to said bell-cranks.

15. In a type-writing machine, the combination of a series of rearwardly and downwardly striking radial type-bars pivoted in an arc in a substantially horizontal plane forwardly of the printing-point; a series of bell-cranks pivoted in a larger arc in a substantially horizontal plane below the type-bars; said bell-cranks comprising upwardly and rearwardly extending arms and forwardly-extending arms, the latter being connected by upwardly and rearwardly extending links to said type-bars; substantially parallel key-levers extending rearwardly beneath said bell-cranks; and links extending upwardly from said key-levers to said bell-cranks.

16. In a type-writing machine, the combination of a series of rearwardly and downwardly striking radial type-bars pivoted in an arc in a substantially horizontal plane forwardly of the printing-point; a series of bell-cranks pivoted in a larger arc in a substantially horizontal plane below the type-bars; said bell-cranks comprising upwardly and rearwardly extending arms and forwardly-extending arms, the latter being connected by upwardly and rearwardly extending links to said type-bars; substantially parallel key-levers extending rearwardly beneath said bell-cranks; links extending upwardly from said key-levers to said bell-cranks; and an upwardly-extending draw-spring connected to the forwardly-extending arm of each of said bell-cranks.

17. In a type-writing machine, the combination with a type-bar and a key-operated actuating device adapted to move in unison for a portion of the printing movement and to thereupon permit the type-bar to independently continue its movement, of a stop for limiting the movement of the key-operated device and thereby permit the type-bar to continue its printing movement, and means for throwing said stop into and out of operative position at will.

18. In a type-writing machine, the combination with a series of type-bars and a series of key-operated actuating devices adapted to move in unison for a portion of the printing movements and to thereupon permit the type-bars to independently continue their movements, of a cushioned stop common to said key-operated devices for limiting the movement of said devices and thereby permit the type-bars to continue their printing movements, and means for throwing said stop into and out of operative position at will.

19. In a type-writing machine, the combination with a key and a type-bar connected thereto and adapted to continue its printing stroke after the key has finished its corresponding stroke, of a stop for said key and means for throwing said stop into and out of operative position at will, said stop when in operative position arresting the key just before the completion of the printing stroke of the type.

20. In a type-writing machine, the combination with a series of type-bars and a series of key-operated actuating devices adapted to move in unison for a portion of the printing movements and to thereupon permit the type-bars to independently continue their movements, of a stop extending transversely of said devices for limiting the movements thereof, thereby permitting the type-bars to continue their printing movements, and means for throwing said stop into and out of operative position at will.

21. In a type-writing machine, the combination with a series of type-bars and a series of key-levers, of a loop connection between each such lever and its connected type-bar in the bight of which the lever is seated to thereby permit the type-bar to continue its printing movement after the lever has been arrested, and a stop extending transversely of said levers and arresting the same just before the completion of the printing strokes.

22. In a type-writing machine, the combination with a series of type-bars and a series of key-levers, of a loop connection between each such lever and its connected type-bar in the bight of which the lever is seated to thereby permit the type-bar to continue its printing movement after the lever has been arrested, a stop extending transversely of said levers and arresting the same just before the completion of the printing strokes, and means for throwing said stop into and out of operative position at will.

23. In a type-writing machine, the combination with a series of type-bars and a series of key-levers, of a loop connection between each lever and its connected type-bar in the bight of which the lever is seated to thereby permit the type-bar to continue its printing movement after the lever has been arrested, a stop extending transversely of said key-levers and in position to arrest the same just before the completion of the printing strokes of the type-bars, and a finger-piece for turning said stop.

24. The combination with a key-lever of a type-bar, a stop for limiting the printing movement of the key-lever, an angle-lever for transmitting motion from the key-lever to the type-bar, a link pivoted at one end of the type-bar and at the opposite end to the angle-lever, a connecting-rod extending between said angle-lever and the key-lever and permitting the continuation of the printing movement of the type-bar when the key-lever shall have been arrested by said stop, said

angle-lever, link and connecting-rod being so organized that the fulcrum of said angle-lever and the pivotal connections of said link deflect to a greater and greater extent from a straight line in proportion as the key-lever is depressed.

25. The combination with a key-lever of a type-bar, a stop for limiting the printing movement of the key-lever, an angle-lever for transmitting motion from the key-lever to the type-bar, a link pivoted at one end to the type-bar and at the opposite end to the angle-lever, a connecting-rod having a loop through the bight of which said key-lever extends, to thereby permit the continuation of the printing movement of the type-bar when the key-lever shall have been arrested by said stop, said angle-lever, link and connecting-rod being so organized that the fulcrum of said angle-lever and the pivotal connections of said link deflect to a greater and greater extent from a straight line in proportion as the key-lever is depressed.

JOHN JAY GREEN.

Witnesses:
B. C. STICKNEY,
FRED. J. DOLE.

370

No. 833,281. PATENTED OCT. 16, 1906.

J. ALEXANDER.

TYPE WRITING MACHINE.

APPLICATION FILED JUNE 2, 1902. RENEWED OCT. 30, 1905.

2 SHEETS—SHEET 1.

Fig. 1.

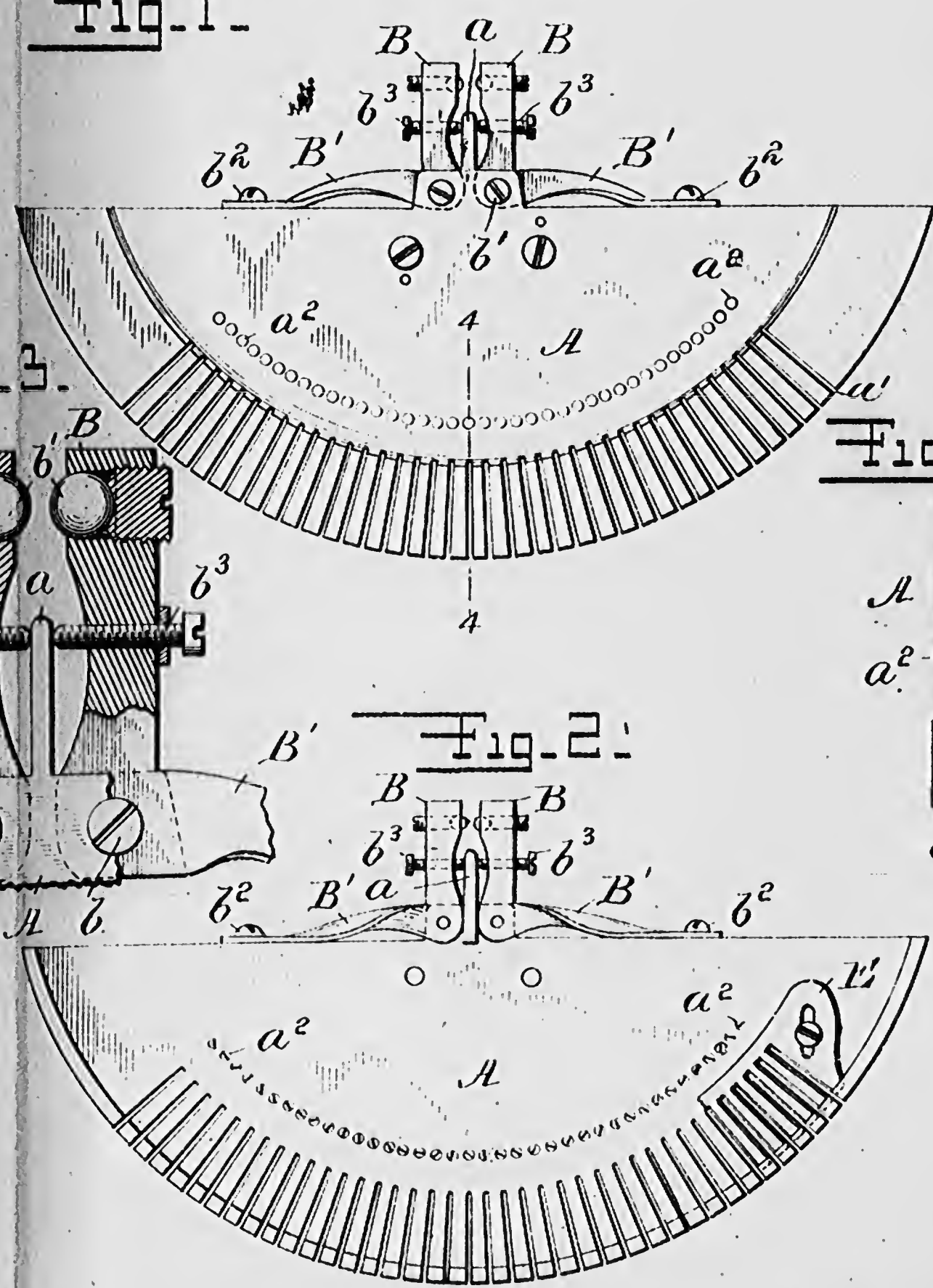

Fig. 3.

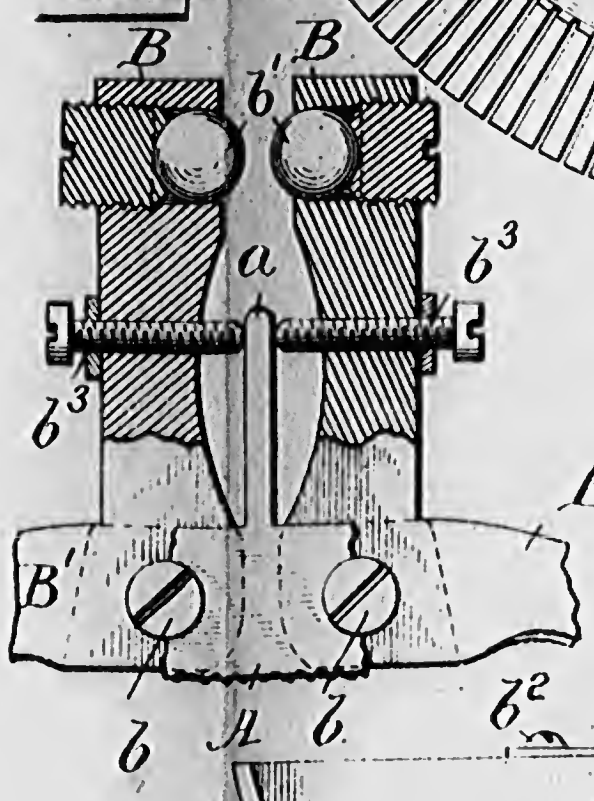

Fig. 4.

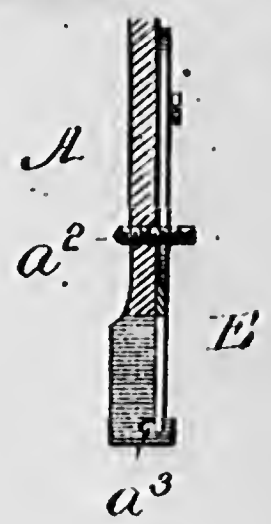

Fig. 2.

WITNESSES:

J. B. McGirr.

Robt. B. Allyn.

INVENTOR.

Jesse Alexander.

By R. Ramsdell.

ATTORNEY

371

No. 833,281. PATENTED OCT. 16, 1906.

J. ALEXANDER.

TYPE WRITING MACHINE.

APPLICATION FILED JUNE 2, 1902. RENEWED OCT. 30, 1905.

2 SHEETS—SHEET 2.

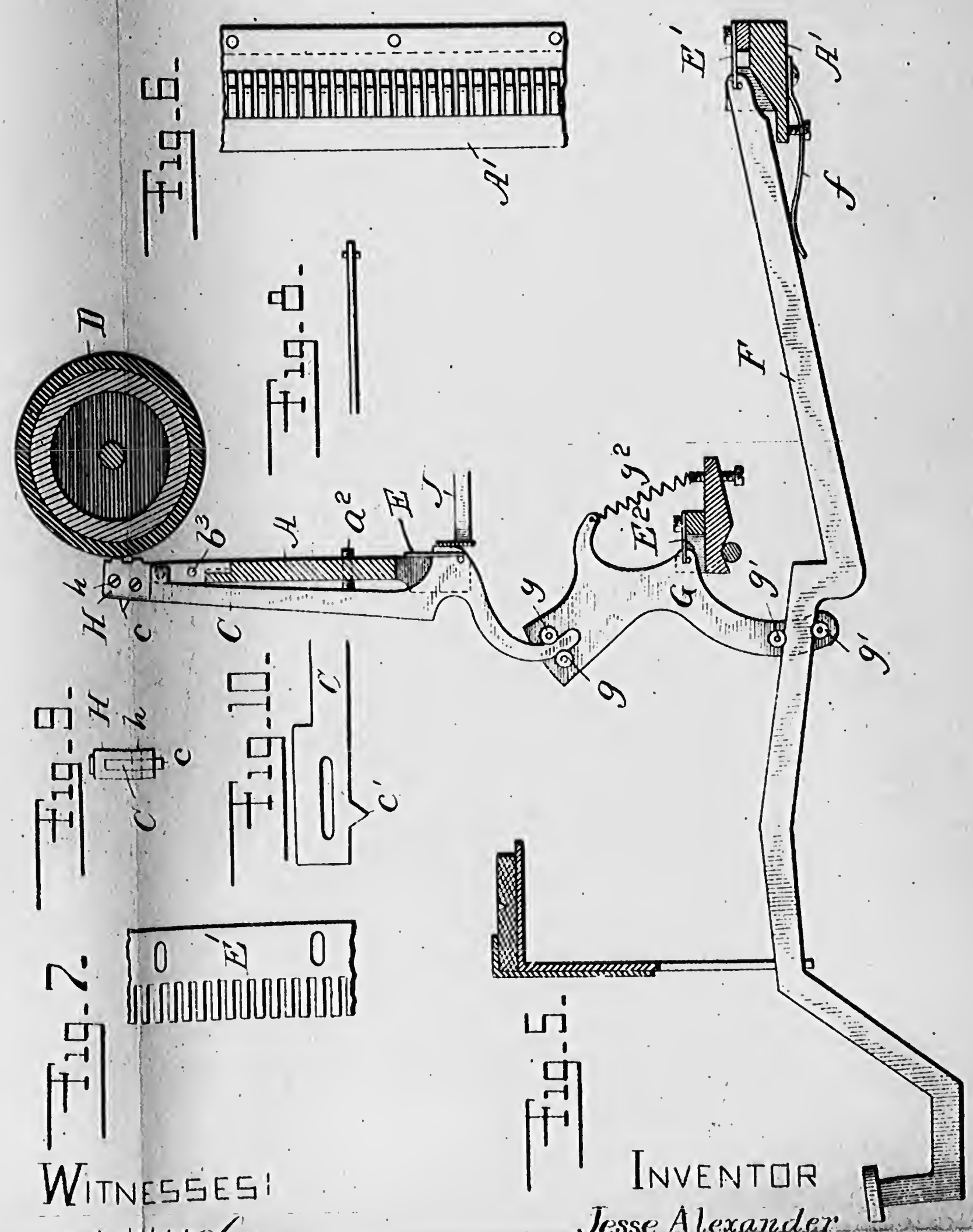

UNITED STATES PATENT OFFICE.

JESSE ALEXANDER, OF BROOKLYN, NEW YORK, ASSIGNOR, BY MESNE ASSIGNMENTS, TO LEE ALEXANDER, KITTIE ALEXANDER, JR., JESSE ALEXANDER, JR., AND TYVE ALEXANDER.

TYPE-WRITING MACHINE.

No. 833,281. Specification of Letters Patent. Patented Oct. 16, 1906.

Application filed June 2, 1902. Renewed October 30, 1905. Serial No. 285,023.

To all whom it may concern:

Be it known that I, JESSE ALEXANDER, a citizen of the United States, residing at Brooklyn, in the county of Kings, State of New York, have invented certain new and useful Improvements in Type-Writing Machines, of which the following is a full, clear, and exact description.

My invention relates to improvements in type-writing machines, and particularly to the construction and mechanism for securing alinement and adjustment of the type and key bars in a machine of the visible writing class. Such a machine is set forth more fully in the other details in my other applications filed herewith.

The object of this invention is to effect a construction of the adjustment and mechanism for alining the types which shall be effective, simple, and ready of application and make possible a more perfect class of work.

It will be found to consist in the improvements hereinafter to be described, and shown in the accompanying drawings.

In the drawings, Figure 1 is a vertical projection of the guide-plate for the type-bars and type-block-alining mechanism. Fig. 2 is a similar view of the same from the rear. Fig. 3 is an enlarged detail of a part of the type-block-alining device. Fig. 4 is a detail sectional view of a portion of the type-bar plate of Fig. 1 on the line 4 4. Fig. 5 is a side and sectional view of a key and type bar mechanism, platen, and supports. Fig. 6 is a plan view of a detail of Fig. 5, showing the end locking-support. Fig. 7 is a detail of a locking-plate which coacts with the support of Fig. 6. Fig. 8 is a detail of the end of a key or type bar. Fig. 9 is an enlarged end view of a type bar and block. Fig. 10 is an enlarged detail of the end of a type-bar.

In the description it has been found convenient to refer particularly to the construction of the alining and adjusting mechanism as applied to this particular type of visible-writing machine; but it will be evident that certain features of the same are also applicable to many other classes of type-writing machines.

I will first describe the type-bar plate and the mechanism for alining and adjusting the type-block.

A is a type-bar plate which in this type of machine in operation stands vertical, as shown in Fig. 1.

B B are posts pivoted at *b b* near the upper central portion of the type-bar plate. These posts carry near their upper extremities preferably steel balls *b′ b′*, which may be held in place by adjusting screws, as shown. The type-bar block, or the end of the type-bar, is adapted to strike in its printing position between the two balls *b′* and *b′*, which thus guide it to its proper position with slight friction and great accuracy. The posts B and B are preferably made integral with spring-like braces B′ B′, which are in turn secured at b^2 and b^2. Upward between the posts B B projects a stationary nose *a*, with which coact the adjusting-screws b^3 b^3. The distance between and the positions of the guide-balls may thus be adjusted as desired. The spring-braces B′ B′ tend to hold the ball-bearing posts in their proper positions.

As shown at Fig. 4, the type-bar plate may be provided with slots *a′ a′*, adapted to guide the end of the type-bar C at or near its pivot. At a^2 in line with the slot *a′* is provided an adjusting-stop in the form herein of a screw, by which the striking force of the type upon the roller D may be limited. The type-bar is pivoted at *c′* in a recess a^3 in the back of the type-bar plate. E is a locking-plate which is provided at the back of the type-bar plate and which slips on over the recesses a^3 in the type-bar plate A to hold the type-bar pivots in their proper positions. Another form of this locking device which is adapted to hold the ends of the key-bars F in place is shown in Figs. 5, 6, and 7, in which A′ is the part of the supporting-frame in which the pivots for the key-bars F rest, and E′ is the locking-plate which slips on over the ends of the key-bar pivots as they rest in the recesses of the key-bar pivot-plate.

In Fig. 8 is shown a detail of a key or type bar with pin-pivots in the end which are adapted to fit into the recesses of the pivot-plate. This view may equally well represent the pin-pivot of the type-bar, as also the pin-pivot of the intermediate lever G. The intermediate levers G are pivoted and supported in the same manner by pins resting in recesses of the intermediate-lever-supporting plate, E^2 being the locking-plate for the same. The intermediate lever as herein

shown is provided with small rollers *g g*, which form supporting-guides for one end of the type-bar. The other end of the intermediate lever is provided with a similar set of guiding-rollers *g' g'* for connection with the key-bar F. *g'* is a spring which may be conveniently provided for holding the intermediate lever in its normal position, at which time the key-bar is in its normal position and the type-bar rests upon a supporting-pad. These details not being the subject-matter of this application need not, however, be described or illustrated minutely herein, but are made the subject-matter of another application. As herein shown, the key-bar has provided a spring *f* for aiding in returning it to its normal position.

The end of the type-bar is provided with a slot in which may operate the screws *h* of the type-block H. It will be seen that in this manner I provide a means for adjusting the type-block along the type-bar in such a way as to adjust the alinement of the type when it may become necessary. The screws passing freely through one side of the type-block take into screw-threads in the opposite side and serve to clamp the two sides of the block tightly on to the type-bar.

The pivots being securely fixed in their relative positions, it is a simple matter to effect the adjustment of the operative length of the type-bar.

Back of the type-bar plate is provided a universal bar J, which is operated by the striking of the type-bar upon it. When the striking depth of a type becomes unsatisfactory, it may be adjusted by the stops *a*, as shown.

What I claim is—

1. In a type-writing machine, a type-bar plate, a slot therein to receive a type-bar, a recess in said plate to receive the pivot of a type-bar, a locking-plate secured to said type-bar plate having a projecting finger to stand over a pivot of a type-bar, and a stop-screw in said plate in line with said slot, substantially as and for the purpose specified.

2. In a type-writing machine, an alining device comprising a supporting-plate, guide-posts mounted thereon and having a passage between the same, revoluble ball-bearings carried by the upper ends of said posts and between the adjacent faces thereof leaving a guide-passage between said ball-bearings, and means for moving the posts independently toward or away from a central position for adjusting the position or extent of the guide-passage.

3. In a type-writing machine, a type-bar plate, alining-posts secured thereto, a passage between said posts, a projection from said type-bar plate, adjusting-screws carried by said posts coacting with said projection for adjusting the position of said alining-posts.

4. In a type-writing machine, a type-bar plate, alining-posts, spring-braces carried by said posts, and means for adjusting the position of said posts.

5. In a type-writing machine, a type-bar plate, alining-posts, a projection from said plate, spring-braces carried by said posts and means coacting with said plate projection for adjusting the position of said posts.

6. In a type-writing machine, a type-bar plate, alining-posts hinged thereto, spring-braces integral with said posts and secured at one end to said plate, and means for adjusting the position of said posts.

7. In a type-writing machine, a type-bar plate, alining-posts secured thereto and having spring-braces, a passage between said posts, ball-bearings within said passage, a projection carried between said posts, and means for adjusting the position of said posts, substantially as described.

8. In a type-writing machine, a type-bar plate, alining-posts, a passage between said posts, a ball carried at the inner surface of each of said posts within said passage, a stationary projection within the lower part of said passage, means coacting with said projection for adjusting the position of said posts.

9. In a type-writing machine, a type-bar plate, alining-posts, a passage between said posts, a ball carried at the inner surface of each post within said passage, a projection from said plate, means coacting with said projection for adjusting the position of said posts for the purpose specified.

10. In a type-writing machine, rotatable antifriction devices located adjacent one another for the passage of the type-bar, and means for adjusting the lateral position of said antifriction devices.

JESSE ALEXANDER.

Witnesses:
L. VREELAND,
ROBT. S. ALLYN.

No. 842,586. PATENTED JAN. 29, 1907.

J. T. SCHAAFF.

KEY ACTION FOR TYPE WRITING AND OTHER KEY OPERATED MACHINES.

APPLICATION FILED DEC. 13, 1904.

3 SHEETS—SHEET 1.

Fig. 1.

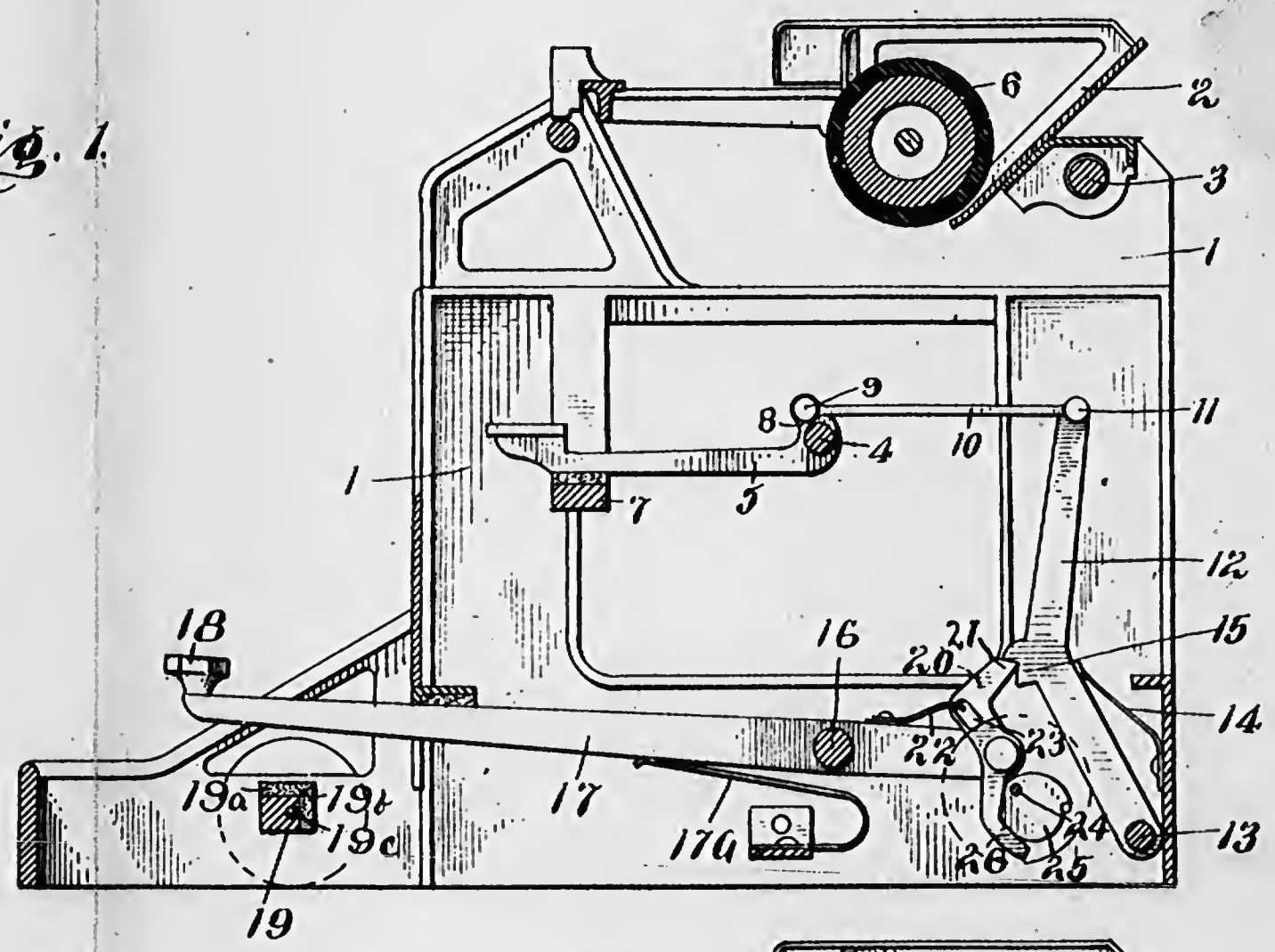

Fig. 2.

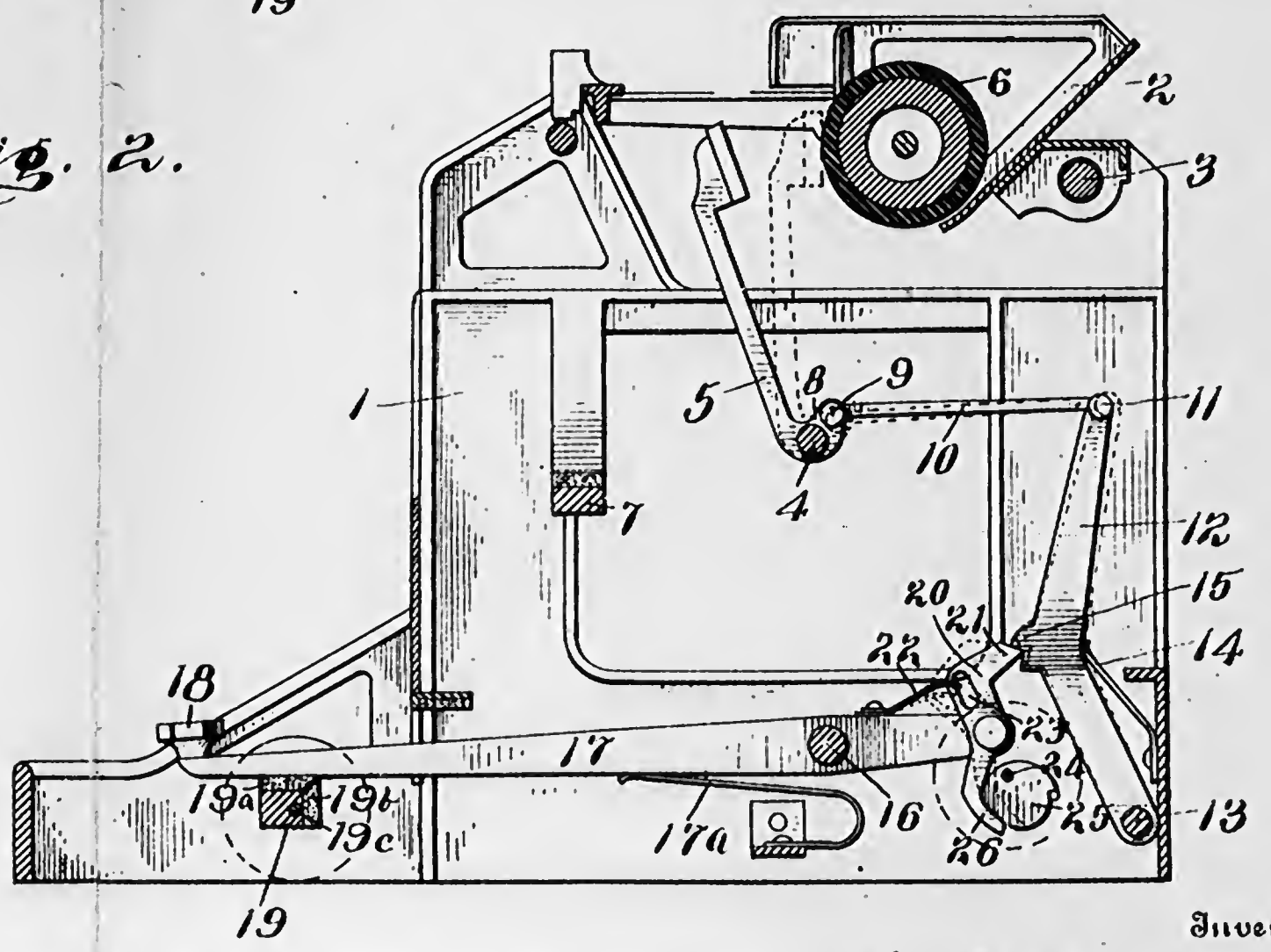

Inventor

Jno. T. Schaaff.

Witnesses

H. A. Robinette

W. W. Simms

By Knight Bros

Attorneys

375

No. 842,586. PATENTED JAN. 29, 1907.

J. T. SCHAAFF.

KEY ACTION FOR TYPE WRITING AND OTHER KEY OPERATED MACHINES.

APPLICATION FILED DEC. 13, 1904.

3 SHEETS—SHEET 2.

Fig. 3.

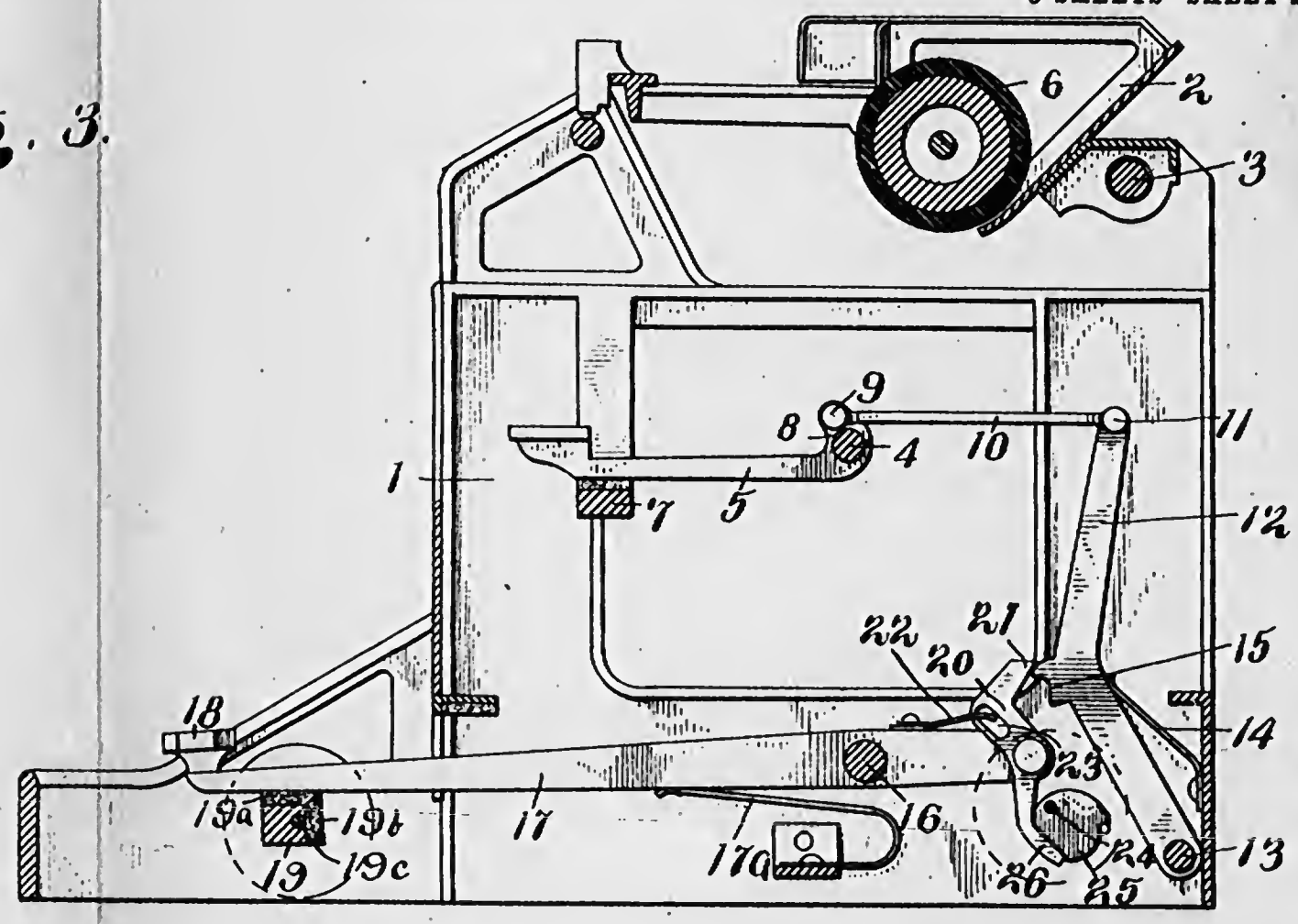

Fig. 4.

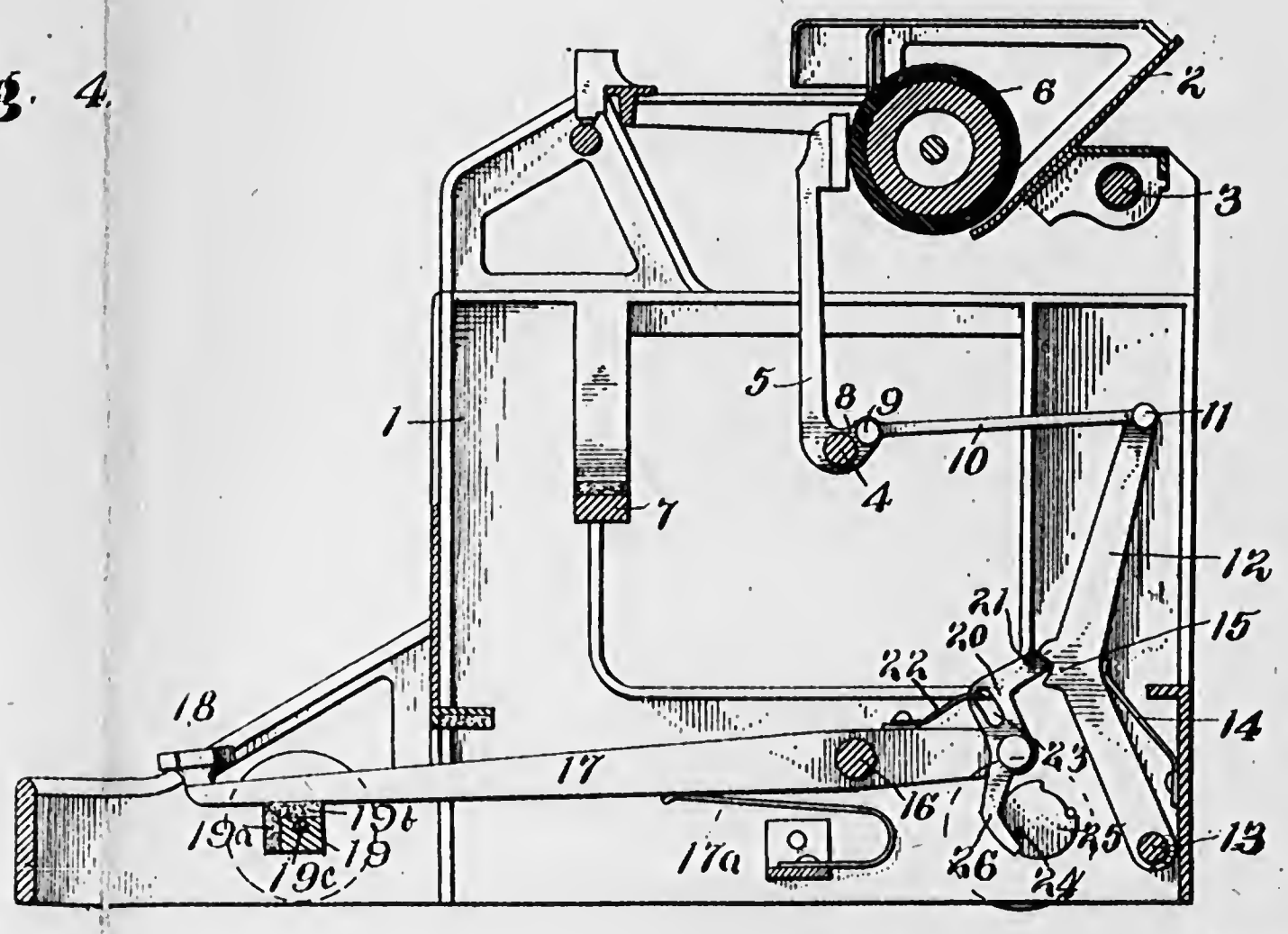

Witnesses
H. C. Robinette
W. H. Simms

Inventor
Jno. T. Schaaff.

By Knight Bros
Attorneys

No. 842,586. PATENTED JAN. 29, 1907.

J. T. SCHAAFF.

KEY ACTION FOR TYPE WRITING AND OTHER KEY OPERATED MACHINES.

APPLICATION FILED DEC. 13, 1904.

3 SHEETS—SHEET 3.

Fig. 5.

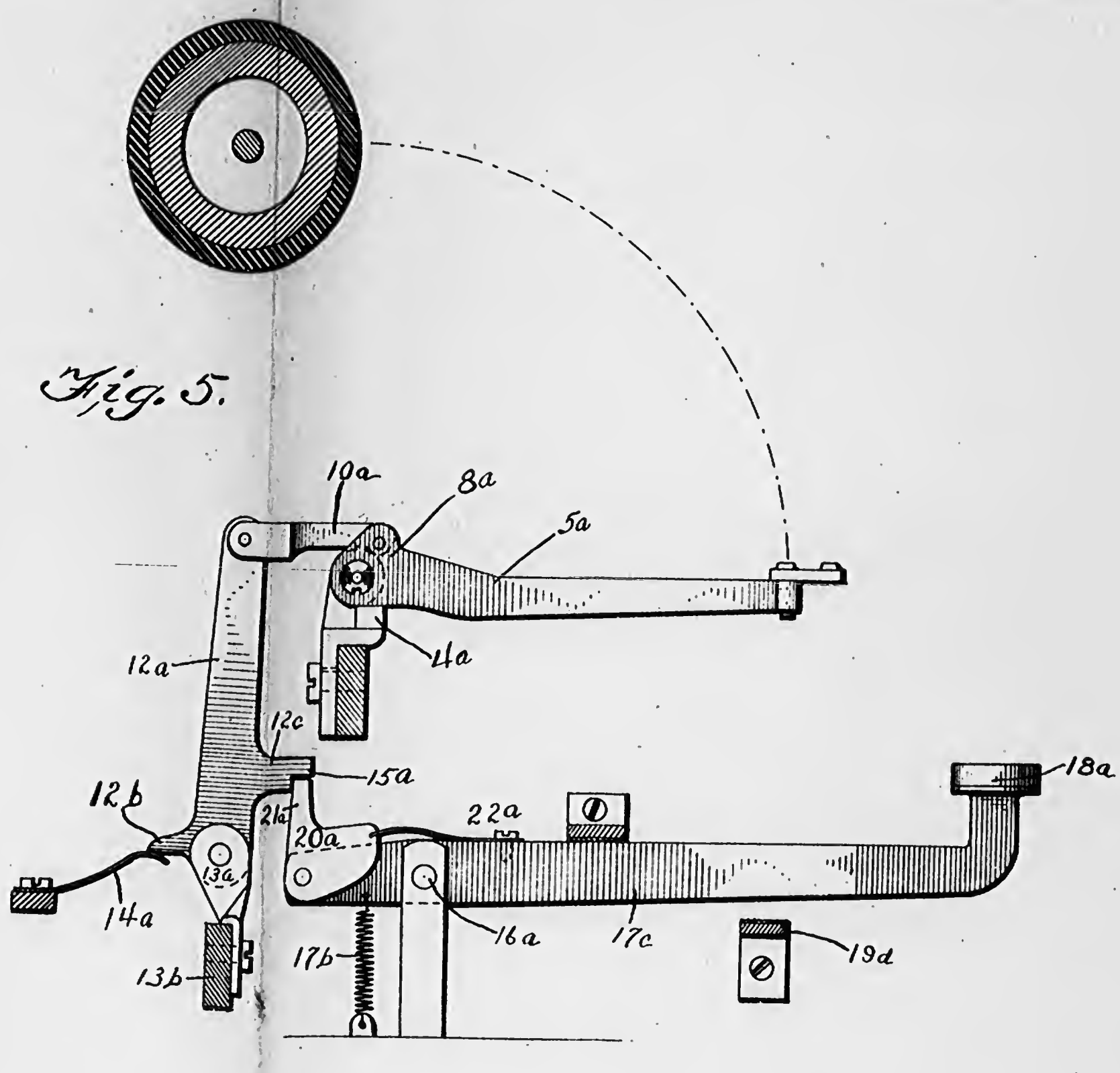

Witnesses
M. J. McPike
H. B. Simms

Inventor
Jno. T. Schaaff.
By Knight Bros
Attorneys

UNITED STATES PATENT OFFICE.

JOHN THOMAS SCHAAFF, OF WASHINGTON, DISTRICT OF COLUMBIA, ASSIGNOR TO UNDERWOOD TYPEWRITER COMPANY, OF NEW YORK, N. Y., A CORPORATION OF NEW JERSEY.

KEY-ACTION FOR TYPE-WRITING AND OTHER KEY-OPERATED MACHINES.

No. 842,586. **Specification of Letters Patent.** **Patented Jan. 29, 1907.**

Application filed December 13, 1904. Serial No. 236,721.

To all whom it may concern:

Be it known that I, JOHN THOMAS SCHAAFF, a citizen of the United States, residing at Washington, in the District of Columbia, have invented certain new and useful Improvements in Key-Actions for Type-Writing and other Key-Operated Machines, of which the following is a specification.

My invention relates to key-actions for type-writing and other key-operated machines, and more particularly to type-writing machines of the front-stroke type in which the key-lever is disconnected from the type-bar after the type-bar has been given the momentum to effect the printing.

It has for an object to provide another construction in which the disconnection between the type-bar and the key-lever takes place after the key-lever has completed its movement, this broad idea being the subject-matter of an application filed by me on April 25, 1904, Serial No. 204,881.

A further object is to provide in a machine in which the key-lever and type-bar are disconnected means by which this disconnection may be prevented, so that the machine will be adapted for heavy work, such as duplicating.

Other objects and advantages will appear in the following specification and will be more particularly pointed out in the appended claims.

In the drawings, Figure 1 is a vertical section of a type-writing machine, one key-action only being shown in normal position. Fig. 2 is a view similar to Fig. 1, the key-lever being shown at the limit of its movement and still in connection with the type-bar. Fig. 3 is a view also similar to Fig. 1, the key-lever being shown in a depressed position and the type-bar returned to its initial position disconnected from the key-lever. Fig. 4 is another view similar to Fig. 1, but with the key-lever and the type-bar locked against disconnection. Fig. 5 is another embodiment of my key-action in normal position.

In the embodiment shown in Figs. 1 to 4, 1 indicates the frame, having a power-driven paper-carriage 2, guided thereon by means of a rod 3. 4 indicates the pivot of the type-bar 5, the pivot being as usual in the form of a segment disposed vertically below the front face of the platen 6, and the type-bars normally lying approximately in a horizontal position and resting on a segment 7. These are common features in a type-writing machine, and therefore no claim is made thereon. In this type of machine the type-bar 5 is provided near its pivot with an upward extension 8, to which is pivoted at 9 one end of a rearwardly-extending horizontal draw-link 10, which is pivoted at 11 to the upper end of a vibratory angle-lever 12. The angle-lever 12 is pivoted at its lower end to the base of the frame 1 at 13, and is pressed forward by a leaf-spring 14, which bears against its rear face and tends to return the type-bar to its initial position. The front face of the angle-lever 12 is provided with notch 15 for a purpose hereinafter to be referred to.

In the lower part of the frame 1 is pivoted at 16 intermediate its ends a key-lever 17, one end of which is held in an elevated position by a spring 17^a, is provided with a key 18, and has its downward movement limited by a stop-bar 19, while the other end carries a pivoted latch 20, extending above and below the key-lever. The upper portion of the latch 20 is provided with a rearwardly-extending nose 21, adapted to enter the notch 15 on the vibratory lever 12 and establish a connection between the key-lever 17 and the type-bar 5. A leaf-spring 22, secured at one end to the key-lever and at its free end extending into a recess 23 in the latch 20, causes the nose 21 to enter the notch 15 when the key-lever is released and to move out of the return-path of the vibratory lever 12 when the key-lever 17 has reached the limit of its movement.

The operation of this portion of my invention is as follows: The parts being in the position shown in Fig. 1—that is, the key-lever being elevated—the nose 21 of the latch 20 being positioned in the notch 15 of the angle-lever and the type-bar being in its retracted position, a depression of the key 18 causes the parts to travel together until the position shown in Fig. 2 is reached, the key-lever 17 having been stopped by the bar 19. The type-bar 5, link 10, and vibratory lever 12 are by the momentum given them by the key-lever 17 carried rearwardly until the type-head strikes the platen 6. In moving rearwardly the vibratory lever 12 moves

away from latch 20, which under the action of spring 22 is moved to the position shown in dotted lines, Fig. 2, thereby permitting the lever 12 to return to its initial position, while the key-lever 17 is depressed, as shown in Fig. 3. Upon the release of the key-lever it returns to its elevated position under the action of spring 17[a], and the nose 21 of latch 20 enters notch 15 in the vibratory lever under the action of spring 22.

In type-writing machines in which the connection between the type-bar and the type-lever is broken to permit the independent return of the type-bar it is sometimes, for example, in duplicating work employing a number of carbons and a number of sheets of paper desirable to maintain this connection between these parts, so that a heavy blow of the type-head against the platen may be secured. This I accomplish by providing a rod 24, eccentrically mounted on a rotatable disk 25, which when rotated by any suitable means causes the rod 24 to be thrown into the path of the depending portion 26 on the latch 20, as shown in Fig. 4, and thereby prevent the movement of the latch 20 when the key-lever has reached the limit of its downward movement.

To maintain the nose 21 of latch 20 in the notch 15, the stop-face of the stop-bar 19 is lowered in the frame of the machine. This is accomplished by mounting the stop-bar eccentrically on pivots 19[c] on opposite sides of the machine and providing it with two stop-faces, one, 19[a], causing the stopping of the key-lever before the type-head has struck the platen 6 and the other, 19[b], permitting the key-lever to remain in connection with the type-bar during the whole movement of the type-bar.

In the embodiment shown in Fig. 5 the type-bar 5[a] is pivoted on a hanger 4[a], and to an upward extension 8[a] is connected one end of a short link 10[a], the rear end being connected to the upper end of a vibratory lever 12[a], which is pivoted at its lower end to a bracket 13[a], secured to a universal bar 13[b]. The rear face of the lever 12[a] is provided with a projection 12[b], under which engages a leaf-spring 14[a], while the front face is provided with a projection 12[c], provided with a notch 15[a]. In this notch engages the nose 21[a] of a latch 20[a], pivoted on the rear end of a key-lever 17[c], which is pivoted intermediate its ends at 16[a] and carries at its front end a key 18[a]. The latch 20[a] is normally held rearward by a leaf-spring 22[a], while the key-lever is normally held elevated at its front end by means of a coil-spring 17[b]. The operation of this embodiment is the same as that set forth relative to Figs. 1 to 4, except that no means is provided for preventing the disconnection of the type-bar and key-lever, and therefore the stop-bar 19[d] is fixed.

The construction herein shown and described is for the purpose of illustration only, and therefore I desire it to be understood that I may within the scope of the appended claims make various changes without departing from the spirit of my invention.

Having thus described my invention, what I claim, and desire to secure by Letters Patent, is—

1. In a key-action, the combination of a vibratory lever movable automatically in one direction, a key-lever pivoted intermediate its ends, a pivoted latch carried by one of said parts and forming a connection between the vibratory lever and the key-lever in the rear of the latter's pivot, means stopping the key-lever before the vibratory lever reaches the end of its movement, and means causing the pivoted latch to move and break the connection between the key-lever and the vibratory lever after the key-lever has been stopped.

2. In a key-action, the combination of a part to be actuated, a key-lever pivoted intermediate its ends, a latch pivoted to the lever in the rear of the pivot of the key-lever, a vibratory lever connected to the part to be actuated and adapted to be engaged by the latch, a spring acting on the vibratory lever to press the same forwardly, and yielding means for breaking the engagement between the latch and the vibratory lever when the key-lever is stopped before the part actuated reaches the end of its forward movement.

3. In a key-action, the combination of a type-bar having an upward extension near its pivot, a vibratory lever connected at its upper end with the upper extension on the type-lever and pivoted at its lower end, a spring pressing said lever forwardly, a key-lever pivoted intermediate its ends, a pivoted latch adapted for connection with the forwardly-pressed vibratory lever, and yielding means for breaking the connection between the latch and the vibratory lever when the key-lever is stopped before the type-bar strikes.

4. In a key-action, the combination of a type-bar, a forwardly-pressed vibratory lever connected at its upper end with the type-bar and pivoted at its lower end, a key-lever pivoted intermediate its ends, a latch pivoted on the key-lever in the rear of the pivot of the key-lever, and a spring carried by the key-lever and acting on the latch to break the connection between the key-lever and the vibratory lever when the key-lever is stopped before the type-bar strikes, and to make said connection when the key-lever has been released.

5. In a key-action, the combination with a type-bar and a key-lever, of a means for causing a disconnection between the key-lever and the type-bar, after the stopping of the key-lever before the type-bar strikes, and means for preventing the disconnection.

6. In a key-action, the combination with the type-bar and the key-lever, of a trip interposed in the connection between the key-lever and the type-bar to permit the type-bar to return independently of the key-lever, a spring for causing the tripping action, and means engaging the trip to prevent operation.

7. In a key-action, the combination with a type-bar and a key-lever, of a trip interposed between the key-lever and the type-bar, and means engaging the trip to prevent its operation, comprising a rotatable disk and a rod eccentrically carried by the disk.

8. In a key-action, the combination with the key-lever and the type-bar, of a latch forming a connection between the key-lever and the type-bar, a spring acting on the latch to cause a disconnection between the key-lever and the type-bar after the key-lever is stopped before the end of the striking or impression movement of the type-bar, means engaging the trip to prevent the disconnection and means for stopping the key-lever before the type-bar has reached the end of its impression movement, said means being movable to permit the key-lever to move with the type-lever to the end of its movement.

9. In a key-action, the combination with the type-bar, and the key-lever, of means for stopping the key-lever before the type-bar reaches the limit of its movement, said means being movable to permit the key-lever to move with the type-bar to the end of its movement, means causing a disconnection of the key-lever and the type-bar when the key-lever is stopped before the type-bar reaches the end of its movement, and means for preventing the disconnection.

JOHN THOMAS SCHAAFF.

In presence of—

EDWIN S. CLARKSON,

H. WHITE.

No. 885,340. PATENTED APR. 21, 1908.

J. H. JACKSON.

TYPE WRITING MACHINE.

APPLICATION FILED MAR. 30, 1906. RENEWED SEPT. 17, 1907.

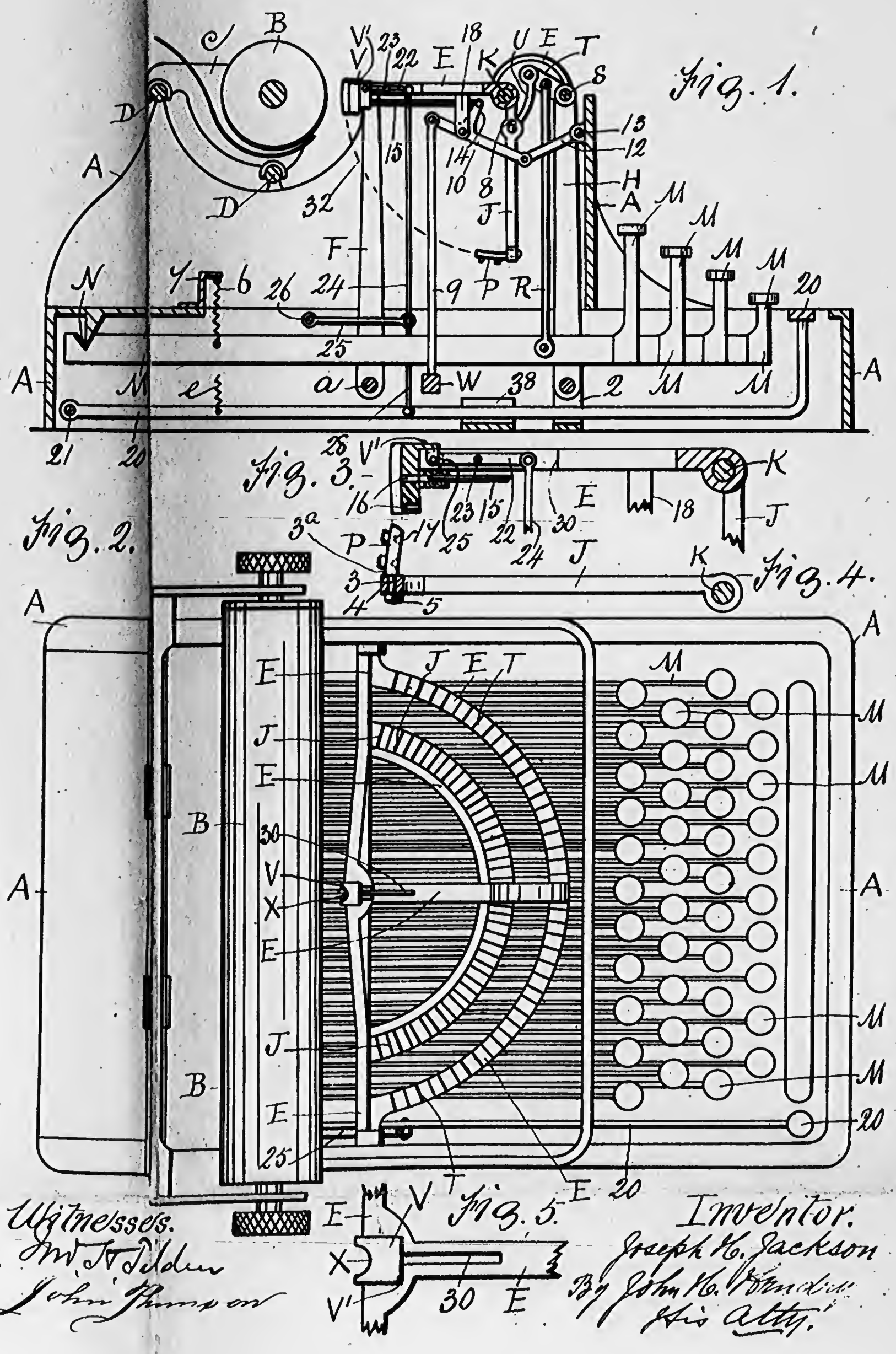

Witnesses.
Wm. T. Tilden
John Thompson

Inventor.
Joseph H. Jackson
By John H. Hendricks
His Atty.

UNITED STATES PATENT OFFICE.

JOSEPH H. JACKSON, OF HAMILTON, ONTARIO, CANADA.

TYPE-WRITING MACHINE.

No. 885,346. Specification of Letters Patent. Patented April 21, 1908.

Application filed March 30, 1906, Serial No. 309,015. Renewed September 17, 1907. Serial No. 393,326.

To all whom it may concern:

Be it known that I, JOSEPH H. JACKSON, a citizen of the United States, and resident of Hamilton, in the county of Wentworth and Province of Ontario, Canada, have invented new and useful Improvements in Type-Writing Machines, of which the following is a specification.

My invention relates to improvements in typewriting machines, in which a segmental carrier carrying a series of type arms fulcrumed thereto is suitably mounted in the machine, and is adapted to carry said type in consecutive order to writing position to and at right angles to the impression roller, or platen, by the operation, or the depression of a key.

The objects of my invention are, first, to provide a machine, in which the type is carried to one common center in the segmental carrier and therein positioned; second, to provide means for engaging the type with the impression surface by pressure, third, to provide a silent and noiseless typewriter while the same is in operation, fourth, to provide means for allowing the upper or lower case of type to be operated by pressure against the impression surface, fifth, to afford facilities for bringing type to position and forwarding the same at right angle to the impression surface at one noiseless operation, and sixth, to provide means for attaining equalized pressure of the type. I attain these objects by the mechanism illustrated in the accompanying drawing in which:

Figure 1, is a sectional side of the machine, and in normal position. Fig. 2, is a plan of the same. Fig. 3, is an enlarged detail sectional elevation of the movable segmental type carrier showing mechanism for adjusting the type shifting block. Fig. 4, is an enlarged side elevation of a type arm, with the type. Fig. 5, is an enlarged plan of the central part of the type carrier.

Similar letters refer to similar parts throughout the several views.

In the drawing the frame work of the machine is indicated by A, and is stationary.

B, is the impression surface or roller mounted on the movable carrier C, which is adapted to slide on the horizontal rails D of the frame A.

E, is the segmental carrier to which the type arms are fulcrumed, and is mounted on side arms F, and the similar central arm H, in front of the arms F. The upper ends of the arms F, and H, are loosely connected to the carrier E, the lower ends of the arms F, being hinged to the transverse bar "*a*" of the frame A, and the lower end of the arm H, is hinged to a centrally located lug 2, of the frame. The arms F, and H, support the segmental carrier E, and move in parallel order to bring the carrier E on a level plane toward the impression surface B, and at right angle thereto. The segmental series of type arms J, are fulcrumed to the segmental wire K, which is secured in the carrier E, which moves at right angle to the impression surface. The opposite ends of the type arms J, are provided with the type P, which are adjustably secured to the type arms, by means of a tapered shank 3, on the end of the type, said shanks fitting in the sockets 4, of the arms, and secured thereto by nuts or screws 5.

The face of the type are convexed and of a circle whose center is the segmental fulcrum wire K, to which the type arms are fulcrumed. The shanks 3 of the type, are a continuation of the type, and have shoulders 3^a, to fit on the sockets 4. A central type arm is shown hanging downward in Fig. 1. of the drawing, and at rest.

The series of keys M, are fulcrumed at N, to the machine, and are held to the fulcrum by the suspension springs 6, which connect said keys, and the bracket 7, of the frame together, the opposite end parts of the keys M being held in rest position by means of the rods R, connected thereto, and to upper cranks T.

The carrier E, has an outer segmental fulcrum wire S, similar to the fulcrum wire K, and a series of cranks T are hung on the wire S, and the aforesaid rods R, and pivotally connect the cranks T, and the keys M, together. Links U, are pivotally connected to the opposite ends of the cranks T, and to the type arms J, as shown. A slot 8 is necessary in the type arm, at the connection of the link U, with the arms for operative purposes and to allow the carrier E to arrive at its predetermined place.

The central part of the segmental carriage E, has a shift block V, with a central guide opening, or recess X, to receive the type P, in said recess. The recess X is shaped in a man-

ner to conform to the sides and to the rear part of the type and is positive. The block V, has an upper flange, or projection V^1 to retain the block in lower position in the carrier, as shown.

When a key M, is depressed, the type P, enters the recess X in the shift block V. Between the hinges "*a*" and 2, of the arms F, and H, is a transverse bar W, to which the vertical rod 9 is connected, and a lever 10, is pivotally connected to the upper end of the rod 9. The opposite end of the lever is pivotally connected to the link 12 which is hinged at 13, to the wall A, of the frame. The lever 10, has an upper arm 14, to which is pivotally connected a needle 15, and the opposite end of the needle enters into a hole 16 in the shift block V, and the point of the needle enters one of the needle point holes 17 shown in broken lines in Fig. 4 of the drawing, in the rear of the type P, when the type is in position in the recess X of the block V, for writing. The lever 10 is fulcrumed to the lug 18, of the carrier E.

When the rod 9 is brought downward by the depression of a key M, on the transverse bar W, the lever 10, and the link 12, come in line with each other, consequently the carrier E, on the arms F, and H, is carried toward the platen B, and at the same time the type arm J, is brought to position and the type P, enters the recess X of the block V, and the needle on the arm 14 enters a hole 16 in the block V, and locks it and also enters the needle point hole 17, in the type, to lock the type, and at the same time to print against the impression surface.

20, is a shift block key, at one side of the key board, and is fulcrumed at 21, to the side of the frame A, and is held at tension by the spring "*e*" which is hung from the bracket 7. A small lever 22 is fulcrumed at 23 to the carrier E, and one end of the lever 22 is pivotally connected to a connecting rod 24, and the opposite end of the lever 22 is pivotally connected to a lug 25 depending from the portion V′ of the shift block V as shown in Fig. 3. The lever 22 operates in a slot 30 in the carrier E, shown in Fig. 5, of the drawing.

The lower end of the rod 24, is pivotally connected to an arm 25, which is centrally located, and a similar arm 25 is provided, the arms being disposed at a distance apart from each other and both arms 25 secured to a loosely mounted transverse rod 26. To the central arm 25, the rod 24 is connected, and to a similar arm 25, the rod 28 is connected, and the lower end of the rod 28 connects with a key 20.

When the key 20 is depressed, the block V, in the center of the carrier E, is shifted upward until the lower hole 16 in the block V is opposite to the needle 15

A cushion 38 is disposed beneath the arms M and 20 in the frame A, to receive the impact of the arms and thus insure an equal depression for all.

The operation of the machine is as follows: Upon the depression of a key M, a rod R is brought downward, consequently the crank T, and the link U raises the type arms J, together with the type P on the broken arc line 32, as shown in Fig. 1 of the drawing. Immediately after the type P has entered the one common and central recess point X in the block V, the rod 9 is brought downward by means of the key which presses on the transverse bar W, thereby causing the lever 10 and the link 12 to be brought into alinement with each other, consequently the arm 14 of said lever 10 propels the needle 15 through the hole 16 in the block V, and the point of the needle into the opening 17 which conforms to this needle point. At the same depression of the key, the segmental carrier E on the three hinged arms F, F, and H, is brought toward the platen B by means of the alinement of the lever 10 and the link 12 forwarding the lug 18, hence also forwards the carrier E, of which said lug forms a part, to a predetermined place.

It will be noticed that all the type J enter the block V, in writing order as one common center, which is the center of the fulcrum wire K of the type arms J, and that each type P is adjusted in the socket 4 of the arms, in order that the type shall all be in the same direction, that is, opposite to the platen or impression surface B. The lower end of the opening, or recess X, in the shift block V, is of sufficient size to allow the type of all the arms J, to freely enter the recess X. Each type is minutely adjusted and set in its socket 4 and held by the screw, or nut 5 on the end of the shank of the type.

It will be obvious that the type arms J, the carrier E, together with the type locking needle 15, are all moved together to perform their separate functions by one depression of any one of the series of typewriting keys, and that the carrier E moves at right angle to the impression surface.

What I claim as my invention and desire to secure by Letters Patent, is—

1. In a typewriting machine, an impression surface, type bars swinging at one end and likewise movable longitudinally thereof, means for actuating said type bars to dispose their printing characters adjacent to said impression surface, and means for moving said type bars longitudinally to complete the printing action.

2. In a typewriting machine, an impression surface, type bars swinging at one end and likewise movable longitudinally thereof and with lateral projections at the other end carrying spaced printing characters, means for actuating said type bars to dispose their printing characters adjacent to said impres-

sion surface, means for moving said bars longitudinally to complete the printing action, and means for bringing said spaced characters alternately into printing position relative to said impression surface.

3. In a typewriter a supporting frame, an impression surface carried by said frame, a movable carrier frame, a plurality of type bars swinging from said carrier frame and provided with laterally extending type arms, a plurality of keys carried by said frame, means whereby the depression of said keys will elevate said type bars to bring said type arms into position adjacent to said impression surface, and means operative by said keys for moving said type bars longitudinally to bring the printing characters into engagement with said impression surface.

4. In a typewriter a supporting frame, an impression surface carried by said frame, a plurality of type bars swinging from one end and movable longitudinally thereof, a plurality of keys, means whereby the type bars are actuated by the depression of the keys, means whereby said type bars are moved longitudinally to bring their characters into printing engagement with said impression surface, and means whereby said type bars are locked during the printing action.

5. In a typewriter, an impression surface, a frame movable toward and away from said impression surface, a plurality of type bars swinging upon said movable frame and adapted to be brought to one common center, and means for moving said movable frame to bring the type of said bars into printing engagement with said impression surface.

6. In a typewriter a stationary supporting frame, an impression surface carried by said frame, a movable frame carried by said stationary frame, a plurality of type bars swinging from said movable frame, a plurality of keys operatively connected respectively to said type bars and adapted to move the same successively to one common center, means operative by said keys for moving said movable frame to bring the type of said bars into printing engagement with said impression surface.

7. In a typewriter, a stationary frame, an impression surface carried by said frame, a movable carrier adapted to move toward and away from said impression surface, type bars swinging from said carrier, keys movably connected to said frame, means whereby the depression of said keys will actuate said type bars, a shifter block movable with said carrier and with which the type bars are engaged, means for operating said shifter block, and means for moving said carrier frame and the shifter block carried thereby to cause the type bars to be brought into printing engagement with the impression surface by the depression of the keys.

8. In a typewriter, a stationary frame, an impression surface carried by said frame, a carrier frame movably associated with said stationary frame, type bars swinging from said carrier and provided with laterally extending type arms, each arm having spaced type arms with a socket associated with each of said type elements, a shifter block movable with said carrier and with which said type bars are engaged when in elevated position, and movable elements carried by said carrier and adapted to bear against said type arms and said shifter block and to alternately engage the sockets therein, a plurality of keys carried by said frame and connected respectively with said type bars, a shifter key carried by said frame and operatively connected to said shifter block.

9. In a typewriter, an impression surface, a plurality of type bars swinging at one end and likewise movable longitudinally thereof, a plurality of keys, means whereby the operation of said keys causes said type bars to be moved into position adjacent to said impression surface and then moved longitudinally into printing engagement with said impression surface.

10. In a typewriter, an impression surface, a plurality of type bars mounted for movement longitudinally toward and away from said impression surface, a plurality of keys, and connecting means between said type bars and keys whereby the first portion of the movement of said keys will dispose said type bars with their type elements adjacent to said impression surface and the final movement of said keys will cause said type bars to be moved longitudinally toward said impression surface and dispose the type into printing engagement with the impression surface.

11. In a typewriter, a supporting frame, an impression surface carried by said frame, a movable carrier, spaced radius bars between said carrier and frame, a plurality of type bars swinging from said carrier and adapted to be disposed successively with their type elements at one common center adjacent to said impression surface, a plurality of keys movably connected to said carrier, connecting means between said keys and said type bars, a stop element associated with said keys, means for moving said carrier with its radius bars, a connecting means between said carrier moving means and said stop element, whereby the initial movement of said keys will dispose said type bars with their type elements adjacent to said impression surface, and the final movement of said keys will move said carrier and the associated type bars bodily to cause the operated type bar to be moved into printing engagement with the impression surface.

12. In a typewriter, a supporting frame, an impression surface carried by said frame, a plurality of type bars swinging at one end and likewise movable longitudinally thereof,

a plurality of movable keys, means whereby the initial movements of said keys dispose the type bars with their type adjacent to said impression surface, and means whereby the final movement of said keys moves the type bars longitudinally to bring the printing characters into printing engagement with said impression surface.

13. In a typewriter, a supporting frame, an impression surface carried by said frame, a plurality of type bars swinging at one end and likewise movable longitudinally thereof, a plurality of movable keys, a bar movably disposed in the paths of said keys, connecting means between said type bars and keys and connecting means between said movable bar and the type bars and the type bar moving devices, whereby the initial movements of said keys will dispose said type bars with their printing characters in position adjacent to said impression surface and the final movement of said keys will move said type bars longitudinally into printing engagement with said impression surface.

14. In a typewriter, a supporting frame, an impression surface carried by said frame, a centrally disposed shifter block, a plurality of movable type bars carried by said frame and adapted to be brought to a common center in advance of said shifter block, a plurality of movable keys, a bar movably disposed in the paths of said keys, means for moving said type longitudinally to bring the printing characters thereof into printing engagement with said impression surface, connecting means between said type bars and keys, and connecting means between said movable bar and the type bar moving devices.

15. In a typewriter, a supporting frame, an impression surface carried by said frame, a plurality of type bars swinging at one end and likewise movable longitudinally thereof, a plurality of keys, connecting means between said keys and type bars, means whereby the type bars are moved into position with their printing characters adjacent to said impression surface by the partial action of said keys, and means whereby the type bars are moved longitudinally to complete the printing action by the remaining action of the keys.

JOSEPH H. JACKSON.

Witnesses:

JOHN H. HENDRY,

JAS. M. SHEPARD.

J. H. JACKSON.

TYPE WRITING MACHINE.

APPLICATION FILED APR. 24, 1907. RENEWED APR. 1, 1908.

900,931. Patented Oct. 13, 1908.

2 SHEETS—SHEET 1.

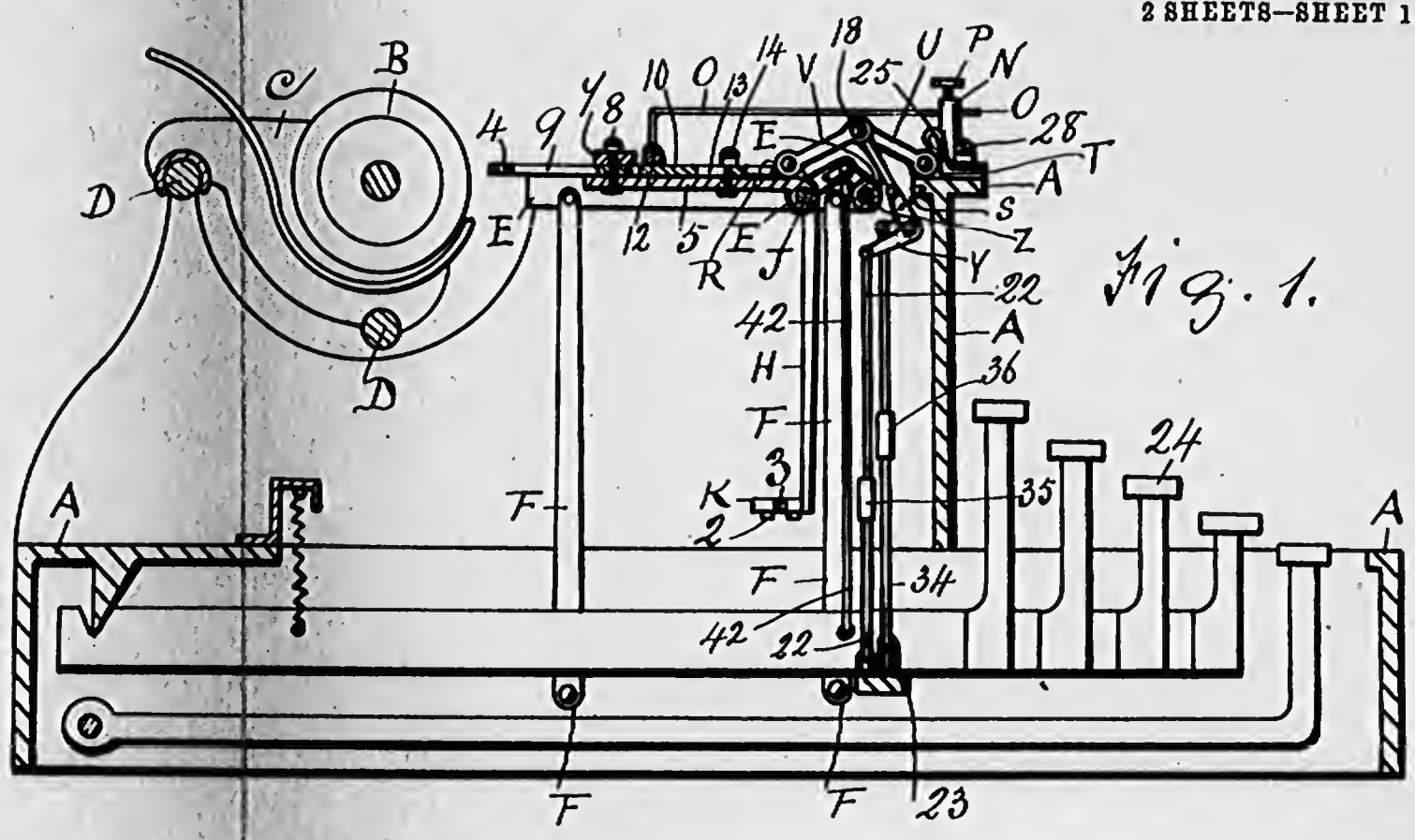

Fig. 1.

Fig. 2.

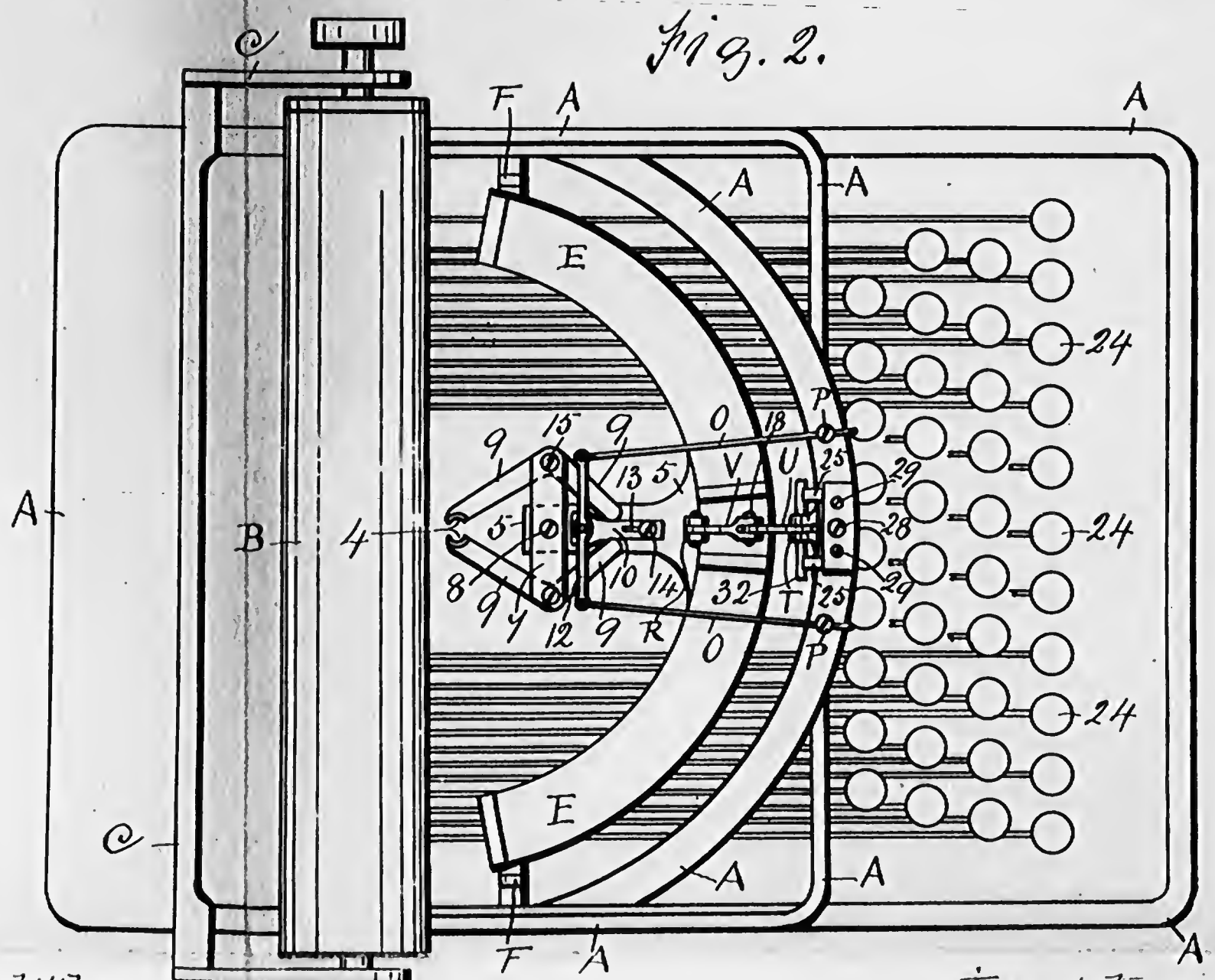

Witnesses.
Arthur E. Wolley.
Robert Holt

Inventor.
Joseph H. Jackson
By John H. Hendry, his Atty.

386

J. H. JACKSON.

TYPE WRITING MACHINE.

APPLICATION FILED APR. 24, 1907. RENEWED APR. 1, 1908.

900,931. Patented Oct. 13, 1908.

2 SHEETS—SHEET 2.

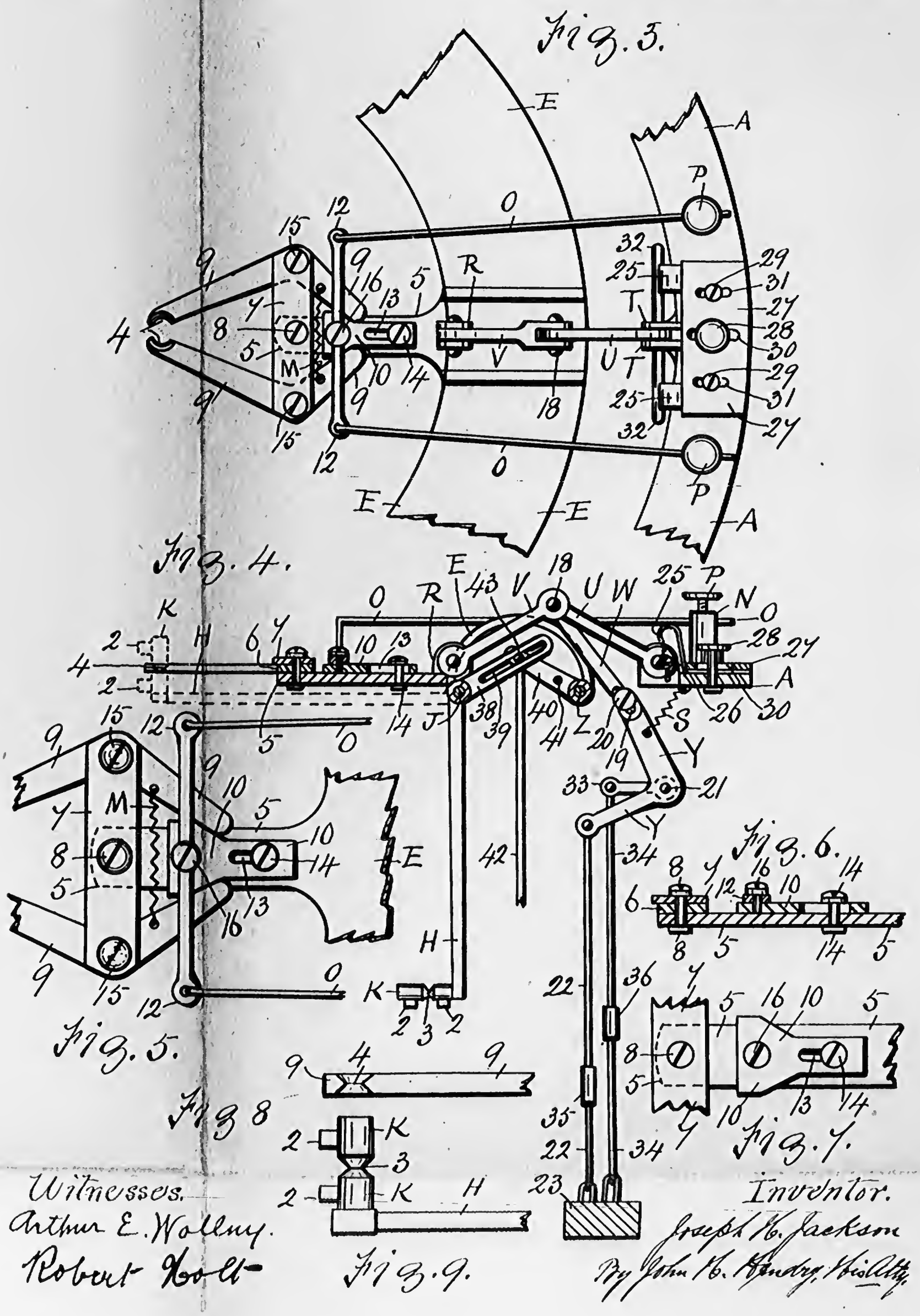

Witnesses.
Arthur E. Wolleny.
Robert Holt

Inventor.
Joseph H. Jackson
By John H. Hendry, Atty.

UNITED STATES PATENT OFFICE.

JOSEPH H. JACKSON, OF HAMILTON, ONTARIO, CANADA.

TYPE-WRITING MACHINE.

No. 900,931. Specification of Letters Patent. Patented Oct. 13, 1908.

Application filed April 24, 1907, Serial No. 369,915. Renewed April 1, 1908. Serial No. 424,540.

To all whom it may concern:

Be it known that I, JOSEPH H. JACKSON, a citizen of the United States, and resident of Hamilton, in the county of Wentworth and Province of Ontario, Canada, have invented new and useful Improvements in Type-Writing Machines, of which the following is a specification.

My invention relates to improvements in type writing machines, in which a stationary frame having a type arm carrier loosely connected thereto and adapted to move horizontally and to predetermined position to and in relation to the platen, by the depression of a key, and by said depression, to adjust the type arm, to locate the same to one defined writing position and common center and to retain the same in said position for writing purposes, and to provide means to allow a certain spring tension to the type arm carrier hence to the type arms while writing.

The objects of my invention are, first, in a type-writing machine, to provide a type-arm carrier adapted to horizontal movement, second, to provide means to allow adjustable and semiautomatic spring tension to said carrier, third, to bring the type arms to defined position and one common center, fourth, to provide means for adjusting and locating the type holder, and retaining the same in writing position, by the depression of a key; fifth, to provide means to effectually overcome the constant noise of a type-writing machine, thereby producing a comparative noiseless machine. I attain these objects by the mechanism illustrated in the accompanying drawing, in which:—

Figure 1 is a sectional side elevation of a type-writing machine, at rest, showing the features of my invention. Fig. 2 is a plan of the same. Fig. 3 is an enlarged plan showing very fully important mechanism comprised in my invention. Fig. 4 is a sectional side elevation of Fig. 3 of the drawing showing adjustable mechanism connected to a depression key and to the typewriting mechanism for semiautomatically operating the same. Fig. 5 is an enlarged detail plan of a part of the mechanism for locating and retaining the type holder, showing very fully the cam mechanism of the same, adjustably placed on the forward part of the movable type-arm carrier, a part only of which is shown. Fig. 6 is an enlarged detail sectional side elevation of the forward end part of the movable type arm carrier and the adjustable cam and section of a cam holder transverse arm, on said carrier, and secured to said cam. Fig. 7 is a plan of Fig. 6 of the drawing. Fig. 8 is an enlarged detail side elevation of the inner edge of one of the side levers or type locating and locking arms, showing the beveled jaw wherewith said levers grip and locate the type holder, and which are fulcrumed to the underpart of the ends of the transverse plate which is secured on the forward end part of the type arm carrier. Fig. 9 is an enlarged detail side elevation of a type arm, showing the type holder having type, and a centrally located beveled recess or slot to conform with the beveled jaws of the side grip levers which are adapted to grip and temporarily hold the type holder.

Similar letters refer to similar parts throughout the several views.

In the drawing the stationary and rigid framework of the machine is indicated by A, and B is the transverse platen or type impression roller journaled on the carriage C which is adapted to slide on the transverse stationary bars D of the frame.

E is the horizontal type arm carrier which is supported by two side arms and a centrally located arm which are indicated by F. The upper ends of the arms F are pivotally connected to the movable carrier E, and the lower ends of said arms are pivotally connected to the frame A, and at convenient places. The ends of the type arms H are loosely connected to a steel fulcrum wire rod J, secured in the carrier E, and which follows the segmental shape of the inner segment line of the carrier. The opposite ends of the type-arms H, are provided with type-holders K, supplied with type 2, and the holder K, has a beveled groove 3, similar to the one shown in Fig. 9 of the drawing, and its purpose hereinafter mentioned.

The movable type arm carrier E has a forward central extension, which may be termed a bracket 5, and on the outer end part of the bracket is a transverse plate 7, and underneath said plate and on the top of the bracket is a small thickness of material or washer 6 to raise the underside of said plate higher than the top of the bracket. The plate 7 together with the washer 6 are secured to the bracket 5 by means of the central screw 8. The plate 7 is raised above the bracket 5, to allow the bent grip-locating

arms 9 to be flush, that is, on the same plane, with the cam 10. The ends of the bent grip levers 9 converge toward each other and are fulcrumed at 15, to the underside of the end parts of the plate 7, and the arms 9 are adapted to adjustment to the carrier E by means of the screw 8.

The cam 10 is secured to the central part of the transverse arm 12 at 16. The cam 10 together with the arm 12 allow the bracket 5, of the carrier E, to slide underneath the same. The cam 10 has a horizontal slot 13 which allows the screw 14, to slide therein, the screw 14 is rigid to the bracket 5 and moves with the bracket and the carrier E, and thereby retains the cam in proper relation with the carrier. The rear ends of the arms 9 are rounded, or suitably shaped, to engage with the partial beveled sides of the cam, the shape, or form, of which is in evidence in Fig. 7 of the drawing. The forward ends of the arms 9, and on their inner edges, or sides, have beveled recesses 4, to conform with the beveled grooves 3 in the type holder K, in order that the arms 9 may grip and temporarily hold the type-holders K, when the same are brought to locating position. It will be noticed that the beveled shape of said recess 4 in the arms 9, and the said beveled groove in the holder K, as shown in Figs. 8, and 9 of the drawing, when the holder K is brought to position, or nearly so, by mechanism hereinafter described, the arms 9 being always on the same plane will adjust and locate the holders K to one defined center and to one defined and predetermined vertical point, or position.

M is a tension spring, the ends of which are secured to convenient places on the rear parts of the arms 9 to bring said rear parts always in contact with the edges of the cam 10, in order that the opposite ends of the arms may always be sufficiently open, or apart, to receive the holders K.

The rigid upper part A, of the frame as shown very clearly in Figs. 2 and 3 of the drawings, have certain raised hubs, or bosses N, through which the ends of the rods O, pass through, and said rods are secured to said hubs N, by means of set screws, or knurls P, which allow said rods O to be adjusted to definite position. The opposite ends of the rods O, are suitably and firmly connected to the end parts of the arm 12, the rods O hold the arm 12, together with the cam 10 in adjusted rigid position with and to the stationary frame A.

R are lugs on the movable carrier E, and T are similar lugs on the stationary frame A, and the links V and U are pivotally connected together by the central pin 18, and the opposite ends of said links V and U are respectively pivotally connected to said lugs. W, is a link, or rod, also pivotally connected to the pin 18, and the opposite and lower end of the rod W, is pivotally connected to the upper end of the bell crank Y. The said lower end of the rod W has a slot 19, and the screw 20 which passes through said slot operates therein and thereby allows the same to be adjusted in order to give the carrier E more or less movement as is deemed necessary.

The bell crank Y, is loosely mounted on the universal transverse shaft, or rod 21, which is journaled in the frame A, and the lower end of the bell crank is loosely connected to the upper end of the vertical rod 22, the lower end of said rod is connected to the universal transverse bar 23. At the depression of a key, or button 24 of the key board, the bar 23 is brought downward together with the rod 22 and the lower end of the bell crank Y; also the rod W together with the connecting parts of the links V and U, consequently the type-arm carrier.

S, is a tension pull spring connected to the bell crank Y, and the opposite end is connected to the frame A.

33, are arms secured to the universal rod 21 previously referred to, and the upper end of the vertical rod 34 is loosely connected to said arm, and the lower end of said rod is loosely connected to the universal bar 23. At convenient places on the rods 22 and 34 are similar sockets 35 and 36 respectively, and are for the purpose of adjusting, that is, lengthening or shortening said rods 22 and 34.

The arm 33 is secured to the universal rod 21, and the rod 34 is pivotally connected to the arm 33, and the lower end of said rod is pivotally connected to the universal bar 23, therefore when the rod 34 is brought downward by any key, the rod 22 is also brought downward thereby moving the carrier E.

The springs 25 exert more or less pressure on the pivotal center pin 32, thereby very materially acting as an equalizer on the type arm carrier E and therefore to the arms 9 thence to the type, thereby equalizing the pressure of the type against the receiving surface B. The lugs on the carrier E may be adjustable to allow manifold writing. E, is pushed to predetermined position toward the platen or impression surface B.

The pivotal center pin 32 of the lugs T and the link U, referred to, extends a distance beyond said lugs T, and the spring 25 is adapted to exert pressure or tension on the rear side of the pin 32, the lugs T have horizontal slots 26 shown in Fig. 4, of the drawing, and which allow the pin 32 to have certain freedom of action in said slots, thereby affording inherent resiliency to and soft horizontal movement to the type-carrier when in operative motion toward and from the receiving surface B.

The lower part of the spring or springs 25, extend on the upper part of the frame A, and a plate 27 covers said lower extensions of the

springs and is adapted to press on and secure the springs to the frame A by means of a screw, or knurl 28, which is adapted together with the screws 29 to fasten said spring and plate 27 to the frame A. The plate 27 has a horizontal slot 30, for the screw 28, and a slot 31 on each side of the slot 30 to allow adjustment of the spring or springs 25 to suit the purposes of said springs. When the plate 27 is adjusted to a forward position, the forward part of said plate exerts a greater pressure on the springs and when the plate is brought away therefrom a contrary effect is thereby produced.

The movable carrier E is provided with an outer segmental or semi-circular steel fulcrum wire Z, similar to the steel fulcrum wire J, to which the type arms H are loosely connected. The upper end parts of the type arms H have oblique extension links or arms 38 having oblong slots 39, and the segmental fulcrum wire Z has arms 40 mounted thereon which operate the type arms H by means of a pin or roller 43, extending from the arm and which slides in said slot when the rod 42 is brought downward.

The lower end of the rod 42 is connected to a key 24, and the upper end of the rod is loosely connected to the link or arm 40, as shown in Fig. 4 of the drawing, or may be connected to the same arm at a point nearer to its fulcrum center Z, as for instance at 41, in order to allow more or less throw to the type arm H, by the more or less depression of a key.

The operation of the machine is as follows:—Upon the depression of a key 24 of the key board, the rod 42 is brought downward together with the arm 40 and the extension link 38 which forms a part of the type arm H and loosely journaled on the segmental steel wire fulcrum J of the movable type arm carrier E. Consequent of above action the type arm at once responds to position as shown in broken lines in Fig. 4 of the drawing, and immediately the above function is performed, or nearly so, the said key of the key board engages with the lower universal bar 23, and the adjustable rod 22 is thereby brought downward, the bell-crank Y, fulcrumed on the universal bar 21, operated, the lever W together with the links V and U are brought downward, the type-arm carrier E is pushed to defined position toward the receiving surface B. At this time the pivotal bent arms 9 move with the carrier E, and the rear parts of said arms contact with the stationary cam 10, which widens said rear parts of the pivotal bent arms and thereby closes the forward ends of the arms upon the type-holder K, and retains the same temporarily in definite horizontal and vertical position until the type 2 has written, or printed. The tension spring M on the rear parts of said arms 9 bring the rear parts of said arms always in contact with the cam 10. The springs 25 on the frame A are always in contact with the center pin 32 of the lugs T and the link U, and the slotted holes 26 in said lugs T, forms an adjustable spring cushion for the links V and U, consequently to the type arm carrier E, together with the arms 9, and also to the type holder K and type 2, while writing. The spring cushion afforded to the type 2 while the same is performing its function is important, and contributes very materially, and in fact very forcibly to the requirements of a noiseless or silent typewriting machine.

It will be obvious that on account of the beveled slot 3, of the type holder K, and the beveled recesses 4 in the fulcrumed grip arms 9, fitting and conforming to each other, the type holder will always enter and find definite location. Should the type-holder K, at any time fail to come slightly short of, or to pass slightly upward beyond its predetermined position, then by the beveled construction of the slot 3 of the type holder and the beveled recess in the jaws of the fulcrumed arms 9 will naturally and automatically temporarily position the one with the other.

Claims.

1. In a typewriting machine a stationary frame, a type arm carrier adapted to horizontal movement on the frame, a transverse plate adjustably connected to the carrier, bent lever arms converging towards each other and fulcrumed to the plate; a stationary cam adapted to adjustment on the frame, beveled recesses in the forward ends of the lever arms and opposite to each other, and the opposite ends of said arms adapted to engage said cam to bring the recessed ends of the arms toward each other.

2. In a typewriting machine, a stationary frame, a type arm carrier adapted to horizontal movement on the frame, lugs on the frame and on the carrier, link motion loosely connected to the lugs, a fulcrum pin extending through and beyond said lugs on the frame, and adapted to horizontal movement in said lugs, equalizing springs on the frame, and in contact with the pin, and adapted to horizontal adjustment on the frame.

3. In a typewriting machine, a stationary frame, a type arm carrier on the frame and adapted to horizontal movement, a stationary cam on the frame, a transverse lever arm adjustably connected to the cam, rods extending from the ends of said lever to the frame and adjustably connected thereto, and means in the cam to allow the movement of the carrier.

4. In a typewriting machine, a stationary frame, a type arm carrier adapted to horizontal movement on the frame, bent levers fulcrumed to the carrier, the ends of said levers converging toward each other, a stationary

cam on the frame, a transverse arm adjustably connected to the cam, rods extending from the end parts of the arm and adjustably connected to the frame, means in the cam to allow the movement of the carrier and to retain the cam in definite position with the carrier.

5. In a type writing machine, a stationary frame, a type arm carrier adapted to horizontal movement on the frame, bent lever arms fulcrumed to the carrier, and converging toward each other, the forward inner parts of said arms, having beveled recesses opposite to each other, a cam adapted to adjustment on the frame, means in the cam to allow movement of the carrier, means on the carrier to operate in said means in the cam.

6. In a typewriting machine, a stationary frame, a type-arm carrier adapted to movement on the frame, bent lever arms fulcrumed to the carrier and converging toward each other, and having beveled recesses in the forward parts of the arms and opposite to each other, a cam having a slot on the frame, means to adjust the cam and means on the carrier to operate in said slot.

7. In a typewriting machine, a stationary frame, a type arm carrier adapted to horizontal movement on the frame, link motion connecting the frame and the carrier, a key board on the frame, adjustable means connected to said link motion and to the frame to propel the carrier upon the depression of a key.

8. In a typewriting machine, a stationary frame, a type arm carrier adapted to horizontal movement on the frame, lever arms fulcrumed to the carrier and converging toward each other, beveled recesses in the forwarded parts of said arms and opposite to each other, a cam on the frame, the opposite ends of said arms adapted to contact with said cam upon the movement of the carrier, type arms fulcrumed to the carrier, a type holder on the arms, a beveled slot in the holder to conform with said recess and enter the same.

9. In a typewriting machine, a stationary frame, a type arm carrier adapted to movement on the frame, bent lever arms fulcrumed to the carrier, beveled recesses in said arms and opposite to each other, means on the frame to contact with the opposite ends of the arms, a type arm having a type holder fulcrumed to the carrier, a beveled slot in the holder to conform to said recesses, means to bring the type holder to position in said recesses and means to operate the arms and to temporarily locate and hold said type holder to printing position.

10. In a typewriting machine, a stationary frame, a movable type arm carrier on the frame, bent lever arms having beveled recesses opposite to each other fulcrumed on the carrier, type arms fulcrumed to the carrier, type holders having beveled slots, on the type arms, and adapted to fit into and between said recesses, to locate the type.

11. In a typewriting machine, a stationary frame, a movable type arm carrier on the frame, link arms connecting the frame and the carrier and adapted to move the carrier, adjustable means on the frame to allow equalizing spring motion or resilient nature, to said links, thereby to said carrier, and consequently a silent impression of the type on a receiving surface.

12. In a typewriting machine, a universal rod, a bell crank loosely connected on the rod, arms secured to the rod, adjustable rods secured to the arms and the lower ends of said rods pivotally connected to a lower universal bar, and the upper part of the bell-crank adjustably connected to a compound link motion.

JOSEPH H. JACKSON.

Witnesses:

JOHN H. HENDRY,

ARTHUR E. WOLLNY.

391

W. P. KIDDER.

TYPE WRITING MACHINE.

APPLICATION FILED APR. 22, 1909.

1,122,764.

Patented Dec. 29, 1914.

2 SHEETS—SHEET 1.

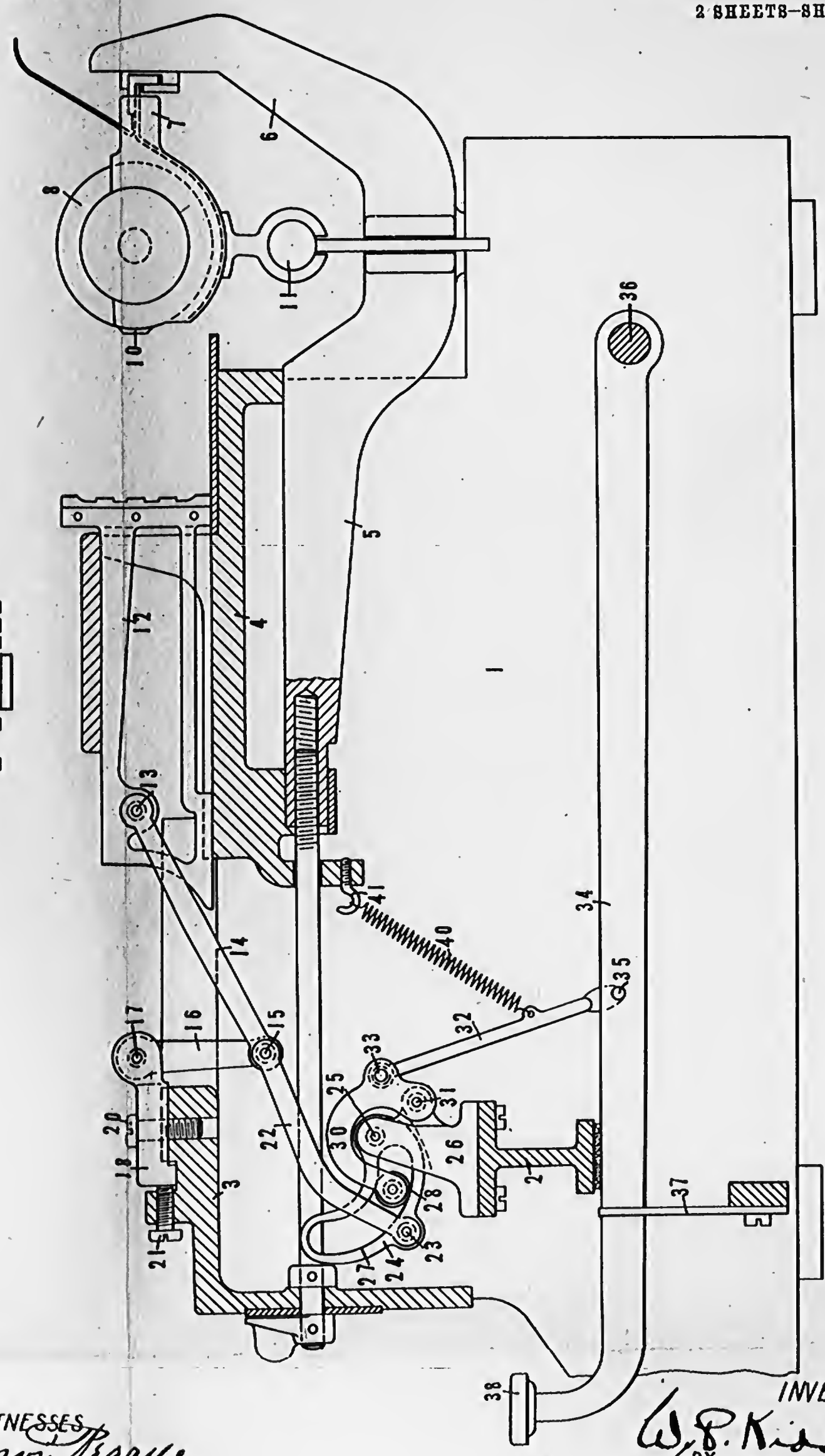

WITNESSES

Norman Pierce

Daniel J. Dunn

INVENTOR

W. P. Kidder

BY

Dull, Warfield & Dull

ATTORNEYS.

392

W. P. KIDDER.

TYPE WRITING MACHINE.

APPLICATION FILED APR. 22, 1909.

1,122,764.

Patented Dec. 29, 1914.

2 SHEETS—SHEET 2.

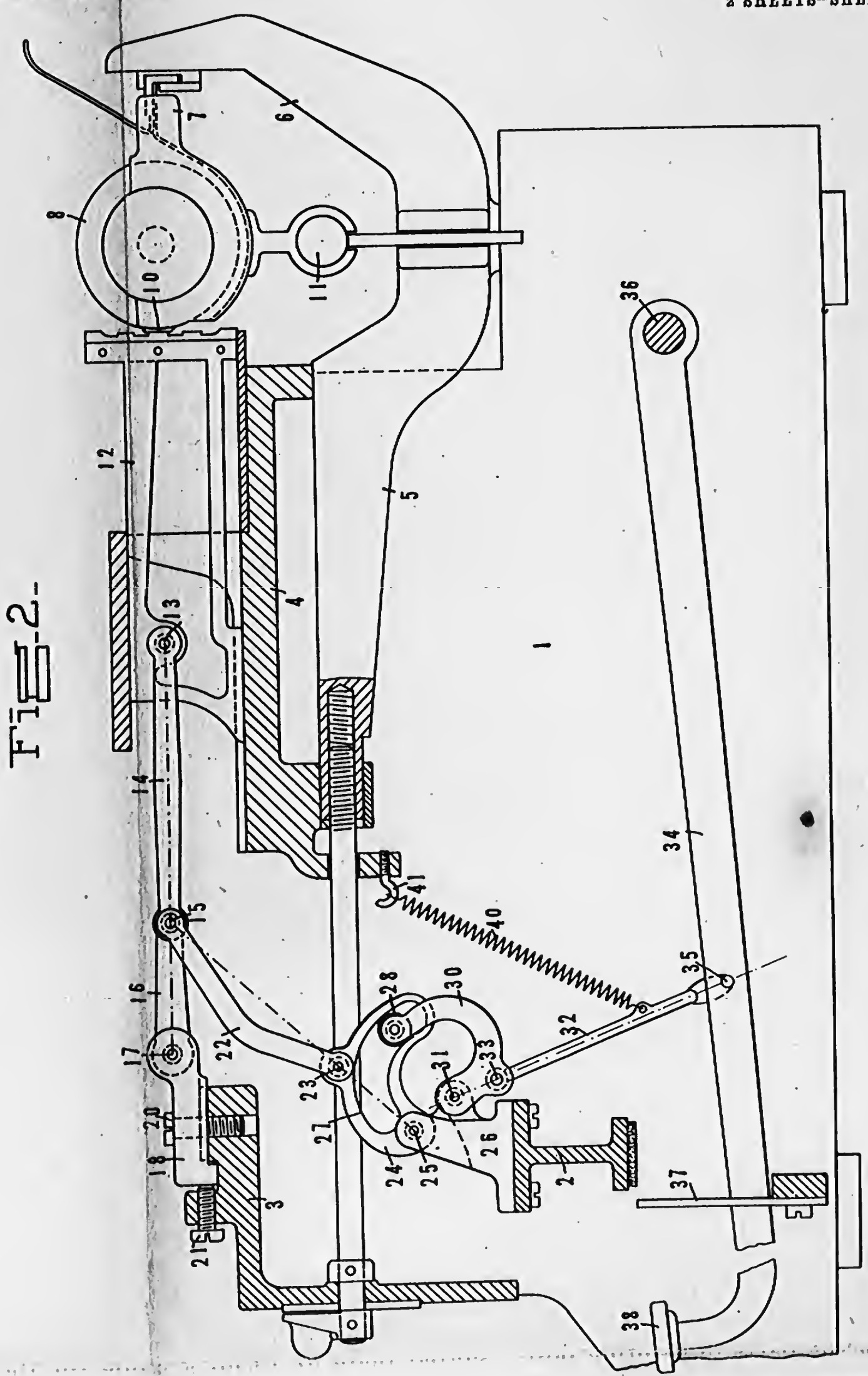

WITNESSES.

Norman Fenyo

Daniel J. Dunn

INVENTOR

W. P. Kidder

BY

Dull, Warfield & Dull

ATTORNEYS.

UNITED STATES PATENT OFFICE.

WELLINGTON P. KIDDER, OF BOSTON, MASSACHUSETTS, ASSIGNOR, BY MESNE ASSIGNMENTS, TO THE NOISELESS TYPEWRITER COMPANY, OF MIDDLETOWN, CONNECTICUT, A CORPORATION OF CONNECTICUT.

TYPE-WRITING MACHINE.

1,122,764. Specification of Letters Patent. Patented Dec. 29, 1914.

Application filed April 22, 1909. Serial No. 491,579.

To all whom it may concern:

Be it known that I, WELLINGTON P. KIDDER, a citizen of the United States, residing at Boston, in the county of Suffolk and State of Massachusetts, have invented certain new and useful Improvements in Type-Writing Machines, of which the following is a full, clear, and exact description, such as will enable others skilled in the art to which it appertains to make and use the same.

This invention relates to typewriting machines, and particularly to that class of machines employing straight-thrust type-bars. The present invention embodies improvements over the type-bar actuating mechanism disclosed in my former Patent, No. 567,241, patented September 8, 1896.

One of the objects of the invention is to improve the touch of typewriting machines.

Another object thereof is to provide improved actuating mechanism for the type carriers whereby they may be moved to the impression point with a positively accelerated velocity during the first portion of the stroke and a negatively accelerated velocity during the second portion of the stroke.

Another object of the invention is to provide actuating means such as will enable printing to be effected with a powerful pressure with a correspondingly light touch.

Other objects will be in part obvious and in part pointed out hereinafter.

The invention, accordingly, consists in the features of construction, combinations of elements and arrangement of parts which will be exemplified in the construction hereinafter set forth, and the scope of the application of which will be indicated in the following claims.

In the accompanying drawings, wherein is illustrated one of the various possible embodiments of my invention, Figure 1 is a sectional view taken transversely through the machine, showing a type-bar action in its normal position of rest; Fig. 2 is a similar view showing the parts in printing position.

Similar reference characters refer to similar parts in both views of the drawings.

Referring now to the drawings, 1 represents the frame of machine which, in the present instance, is provided with a cross support bar 2, a ledge 3 and a table or plate 4 which supports and across which the type-bars are moved when thrust to impression. The center tie of the machine is shown at 5, the rear portion 6 of which extends upwardly to form a rigid backing for the platen carriage 7, the latter carrying the platen roll 8 and the platen 10, which lies in front of the platen rail and receives the pressure of the printing instrumentalities. The platen carriage, in the present instance, rides upon the rail 11 for letter spacing, and is shiftable for different case printing, by means not shown, the rear portion of the carriage sliding in suitable ways formed upon the rear portion 6 of the tie-rod. The type bar 12 moves in suitable grooves upon the type plate 4, and the front of the bar is provided with a plurality of type faces which, when the type-bar is moved from the position in Fig. 1 to that of Fig. 2, effect printing upon the impression sheets positioned in front of the platen.

To the type-bar 12, at 13, is pivotally attached a pair of links 14 whose other ends are connected to the pivot 15 of a second link 16, the latter being pivoted at 17 to an adjustable bracket 18 secured upon the ledge 3 as by means of the set-screw 20, said set-screw operating to hold the brackets in a fixed position after adjustment, which may be effected as by means of the adjusting screw 21. To the pivot 15 is attached a second pair of links 22 whose other ends are pivoted at 23 to an oscillatory cam member 24 pivoted at 25 upon a bracket 26 supported upon ledge 2. Member 24 is provided with a cam groove 27, which is traversed by a roller 28 mounted at one end of a rocker arm 30, said arm being pivoted at 31 to an ear extending from bracket 26. At a suitable distance from pivot 31 of arm 30 a rod or link 32 is pivotally connected as at 33, the other end of said link being connected with the key lever 34 at 35, the several key levers being mounted upon the shaft 36. A slotted plate 37 forms a guide for the several key levers which are adapted to be manipulated by means of keys 38. A spring 40 attached to a hook 41 in the frame of the machine, returns the key lever and the various operative parts of the key action to their normal position of rest after printing has been effected.

Having thus described the construction of this embodiment of my invention, the operation thereof may now be understood. When the key is pushed downwardly, said key, through rod 32, oscillates arm 30 from the position shown in Fig. 1 to that shown in Fig. 2. In that position, the three pivots 31, 33 and 35 are in a straight line, thus limiting the downward movement of the key lever 34 and effecting a noiseless arresting of the various parts. When the arm 30 moves from the position of Fig. 1 to that of Fig. 2, roller 28, traversing the slot 27 of cam 24, moves the links 22 and the toggle constituted by links 16 and 14 from the position shown in Fig. 1 to that of Fig. 2, in which position the pivots 17, 15 and 13 of the toggle are in a straight line. Likewise, pivots 25, 23 and 15 of links 22 and the oscillatory member 24, which constitute the second toggle, are in a straight line. The cam slot 27 is so formed that at the beginning of the swinging motion of arm 30 the oscillatory member 24 will start slowly and move with a gradually accelerated velocity to the middle portion of the movement, and, during the second portion of the stroke, with a negatively accelerated velocity. This operation is effected by the shape given the cam groove, and it will be seen that while the roller passes from the position shown in Fig. 1 to that shown in Fig. 2, the movement of the oscillatory member 24 will at first be comparatively small, and that the knuckle-joint or toggle whose center is represented by the pivot 15, will have completed the last portion of its closing movement, and the toggle whose center is illustrated at 23 will also have completed its straightening movement. It follows, therefore, that this mechanism will cause a powerful pressure to be exerted by the face of the type upon the impression sheets of the platen with a correspondingly light pressure upon the keys. During the last portion of the movement, as the link 32 nearly assumes a straight line with the pivots 31 and 33, the power of the key-lever is of course lessened, but this is more than offset by the power exercised by the cam. If desired, the position of pivot 33 may be so modified that the link 32 will not assume a straight line, as shown in Fig. 2, with the pivots 31 and 35, but in this event it will be necessary to position a stop beneath the key-levers in order to prevent overthrow. Spring 40 assists in returning the parts to their former positions, and also breaks the joint between the arm 30 and the link 32.

It will, accordingly, be seen that I have provided a construction well adapted to attain, among others, all the ends and objects above pointed out in a simple, yet efficient manner.

One important advantage of the present construction over that disclosed in prior structures, such as my prior Patent No. 567,241 above mentioned, is that the action herein has a smoother "feel" to the touch. This result is attained by the conformation given the cam groove and the relation of the various parts so that the type-bar starts slowly, attains its maximum velocity at the middle portion of the stroke, and then moves with a gradually diminishing velocity during the latter portion of the stroke until the type faces are pressed into contact with the surface of the platen.

Among other advantages accruing herein, the inertia of the type-bar and associated parts are gradually overcome at the beginning of the stroke, thereby rendering it easy to start the same. The stroke has its greatest power at the end, and the entire action is substantially noiseless.

As many changes could be made in the above construction and many apparently widely different embodiments of this invention could be made without departing from the scope thereof, it is intended that all matter contained in the above description or shown in the accompanying drawings shall be interpreted as illustrative and not in a limiting sense.

Having described my invention, what I claim as new and desire to secure by Letters Patent is:

1. In a typewriting machine, in combination, a platen, a type carrier, a key lever and means intermediate the last two elements adapted upon actuation of said key lever to impart to said carrier movement in a rectilinear direction with a positively accelerated velocity during the first portion of the stroke and a negatively accelerated velocity during the latter portion thereof, said means comprising a plurality of toggles, the end of one of said toggles being connected with the elbow of another.

2. In a typewriting machine, in combination, a platen, a type bar having a limited path of travel, a key lever for actuating said type bar, and a plurality of toggles interposed between the key lever and the type bar, one of said toggles acting to limit the path of travel of said type bar and another of said toggles being connected with the elbow of said first-mentioned toggle to move the same into extended position as it assumes extended position itself.

3. In a typewriting machine, the combination with a platen, and a straight-thrust type-bar, of a key-lever, and a plurality of toggles interposed between the key-lever and the type-bar adapted, when the former is actuated, to thrust the latter to impression, and cam means operated by one of said toggles, said toggles silently arresting the movement of the movable parts as they assume extended position on depression of a key lever.

4. In a typewriting machine, the combination with a platen, of a straight-thrust type-bar, a toggle interposed between a fixed portion of the machine and said type-bar, a toggle interposed between a fixed portion of the machine and the joint of said first-mentioned toggle, and means connecting said second-mentioned toggle with the key-lever.

5. In a typewriting machine, the combination with a platen, and a straight-thrust type-bar, of a toggle interposed between a fixed portion of the machine and said type-bar and adapted when straightened to force the type-bar to impression, a toggle interposed between a fixed portion of the machine and said first-mentioned toggle and adapted when actuated to straighten the same, a cam formed upon one member of said second-mentioned toggle, a key-lever, and means connected with said key-lever for traversing said cam, thereby actuating said second-mentioned toggle, whereby the type-bar will be thrust to impression.

6. In a typewriting machine, the combination with a platen, a type carrier and a toggle for pushing the type carrier to the impression point, of a toggle for straightening said first-mentioned toggle, a key, a cam mechanism combined with said second-mentioned toggle and connected with said key and means pivotally connected with said key-lever for actuating said second-mentioned toggle.

7. In a typewriting machine, the combination with a platen, an endwise movable type carrier, of a toggle comprising a pair of pivotally connected links interposed between the type carrier and a fixed support, a toggle comprising a pair of pivotally connected links interposed between a fixed support and said first-mentioned toggle and adapted when actuated to straighten the latter, a cam surface formed upon one of the links of said second-mentioned toggle, a key-lever, and means connecting said key-lever with said cam adapted, when the key lever is depressed, to traverse the cam and actuate said second-mentioned toggle.

8. In a typewriting machine, the combination of a platen, an endwise movable type-bar, a toggle comprising a pair of pivotally connected links one of which is connected with the type-bar, a fixed support to which the other of said links is pivotally connected, and means for straightening said toggle to force the type-bar to the impression point, comprising a pair of pivotally connected links one of which is connected to the connection of the links of said first-mentioned toggle, a fixed support to which the other link of said second-mentioned toggle is pivotally connected, a cam path formed upon one of the links of said second-mentioned toggle, an oscillatory arm provided with a roll adapted to traverse said cam path, a key-lever, and a link connecting said arm with the key-lever.

9. In a typewriting machine, the combination with a straight-thrust type-bar, a toggle comprising a pair of pivotally connected links for actuating the type-bar, one of said links being pivotally connected with the type-bar, an adjustable stationary support to which the other of said links is pivoted, of means for straightening said toggle, whereby the type-bar will be pushed to the impression point, comprising an oscillatory member, a fixed support upon which said member is pivotally supported, a link connecting said member with the point of connection of said first-mentioned links, said oscillatory member and the link connected therewith constituting a toggle, a cam groove formed in said oscillatory member, an arm pivotally supported upon the support for said oscillatory member and having a roll which is adapted to traverse said cam path, a key-lever, and a link connecting said key-lever with said arm.

10. In a typewriting machine, the combination with a platen, a straight-thrust type-bar, and a key-lever, of means including three toggles interposed between the key-lever and the type-bar for actuating the latter with a positively accelerated velocity during the first portion of the stroke, and a negatively accelerated velocity during the latter portion of the stroke.

11. In a typewriting machine, the combination with a platen, and a type-bar, of a key-lever, a cam and three toggles interposed between the key-lever and the type-bar adapted, when the key-lever is depressed, to actuate the type-bar with a positively accelerated velocity during the first portion of the stroke and a negatively accelerated velocity during the latter portion thereof.

12. In a typewriting machine, the combination with a platen, and a straight-thrust type-bar, of means for actuating the latter, comprising a toggle composed of a pair of pivotally connected links one of which is connected pivotally with the type-bar, a fixed support upon which the other of said links is pivotally supported, a second toggle comprising an oscillatory member provided with a cam groove, a fixed support upon which said oscillatory member is pivoted, a link connecting the intermediate portion of said oscillatory member with the point of connection of said first-mentioned links, a key-lever, an oscillatory arm having means adapted to traverse said cam groove, a key-lever, and a link connecting said oscillatory arm with said key-lever, said cam groove being so shaped that when said key-lever is depressed and the means upon said oscillatory arm begins to traverse said cam groove, the type-bar will be moved toward

the platen between the first portion of the stroke with a positively accelerated velocity and during the latter portion of the stroke with a negatively accelerated velocity.

13. In a typewriting machine, the combination with a platen, a straight-thrust type-bar, and a key-lever, of means interposed between the key-lever and the type-bar for actuating the latter, comprising a toggle connected directly with the type-bar, a toggle connected with said first-mentioned toggle and adapted to straighten the same, and a link between the second-mentioned toggle and the key-lever.

14. In a typewriting machine, the combination with a platen, a direct-thrust type-bar, and a key-lever, of means interposed between the key-lever and type-bar for actuating the same, comprising a toggle directly connected with said type-bar, a toggle pivotally connected with said first-mentioned toggle and adapted to actuate the same, cam means combined with said second-mentioned toggle, and means coöperating with said cam to actuate the toggle which is connected with the key-lever.

15. In a typewriting machine, the combination with a platen, a direct-thrust type-bar, and a key-lever, of means interposed between the key-lever and type-bar for actuating the same, comprising a toggle directly connected with said type-bar, a toggle connected with said first-mentioned toggle and adapted to actuate the same, cam means combined with said second-mentioned toggle, and link and lever mechanism coöperating with said cam means and connected with said key-lever whereby, when the latter is depressed, the type-bar will be thrust to the impression point upon the straightening of both of said toggles.

16. In a typewriting machine, the combination with a type-bar, and a key-lever, of intermediate mechanism for transmitting motion from one to the other, including three toggles to silently arrest the movement of the key lever and type bar as the toggles assume extended position.

17. In a typewriting machine, the combination with a type-bar, and a key-lever, of intermediate mechanism for transmitting motion from one to the other, including three toggles arranged in series and adapted silently to arrest the movement of the key-lever and type-bar as they assume extended position.

18. In a typewriting machine, the combination with a platen, a type bar, a key lever, and intermediate mechanism therebetween for transmitting motion from one to the other including a plurality of toggles, said toggles forming silent stops in their extended positions for limiting the movements of the type bar and key lever.

19. In a typewriting machine, the combination with a platen, a type bar, a key lever, and intermediate mechanism therebetween for transmitting motion from one to the other including a plurality of toggles connected in series, the construction and arrangement of said toggles being such as to gradually and silently arrest the movement of the moving parts when in extended position.

20. In a tyepwriting machine, the combination with a platen, a type bar, a key lever, and intermediate mechanism therebetween for transmitting motion from one to the other including a plurality of toggles, one of which is connected to said type bar and another to said key lever, the construction and arrangement of said toggles being such as to gradually and silently arrest the movement of the moving parts when in extended position.

21. In a typewriting machine, in combination, a movable member, means for moving said member, and means for arresting the movement of said movable member including a plurality of toggles adapted to be moved to straightened position, the end of one of said toggles being pivotally connected with the elbow of the other toggle.

In testimony whereof I affix my signature, in the presence of two witnesses.

WELLINGTON P. KIDDER.

Witnesses:
ROSWELL S. BARROWS,
RUTH O. ANDERSON.

397

W. A. LORENZ.

TYPE WRITING MACHINE.

APPLICATION FILED APR. 16, 1909.

1,123,771.

Patented Jan. 5, 1915.

8 SHEETS—SHEET 1.

Fig. 1.

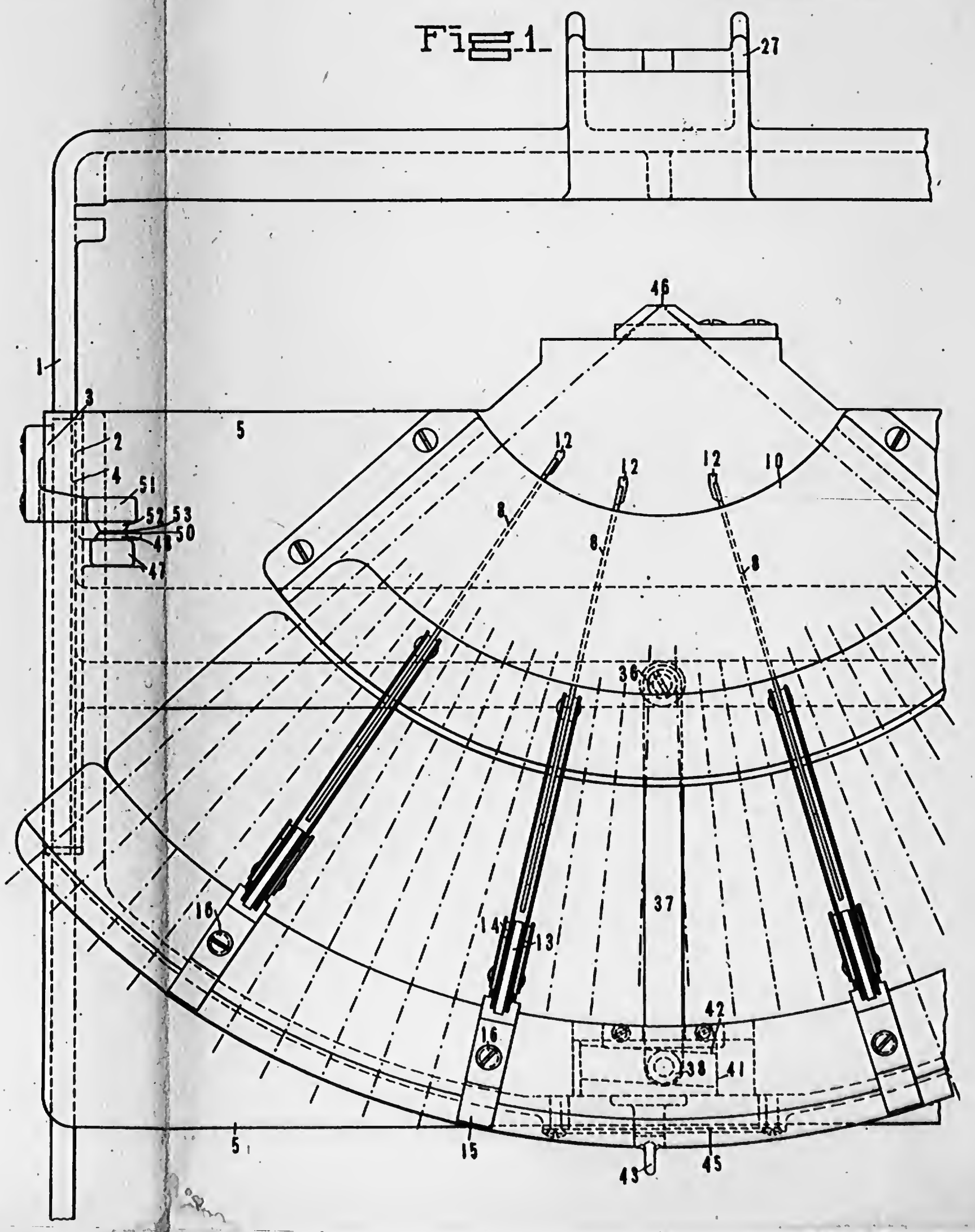

WITNESSES.

Morris Pierce

Daniel J. Dunn

INVENTOR

W. A. Lorenz

BY

Duell Mauzfield & Duell

ATTORNEYS.

W. A. LORENZ.

TYPE WRITING MACHINE.

APPLICATION FILED APR. 16, 1909.

1,123,771.

Patented Jan. 5, 1915.

3 SHEETS—SHEET 2.

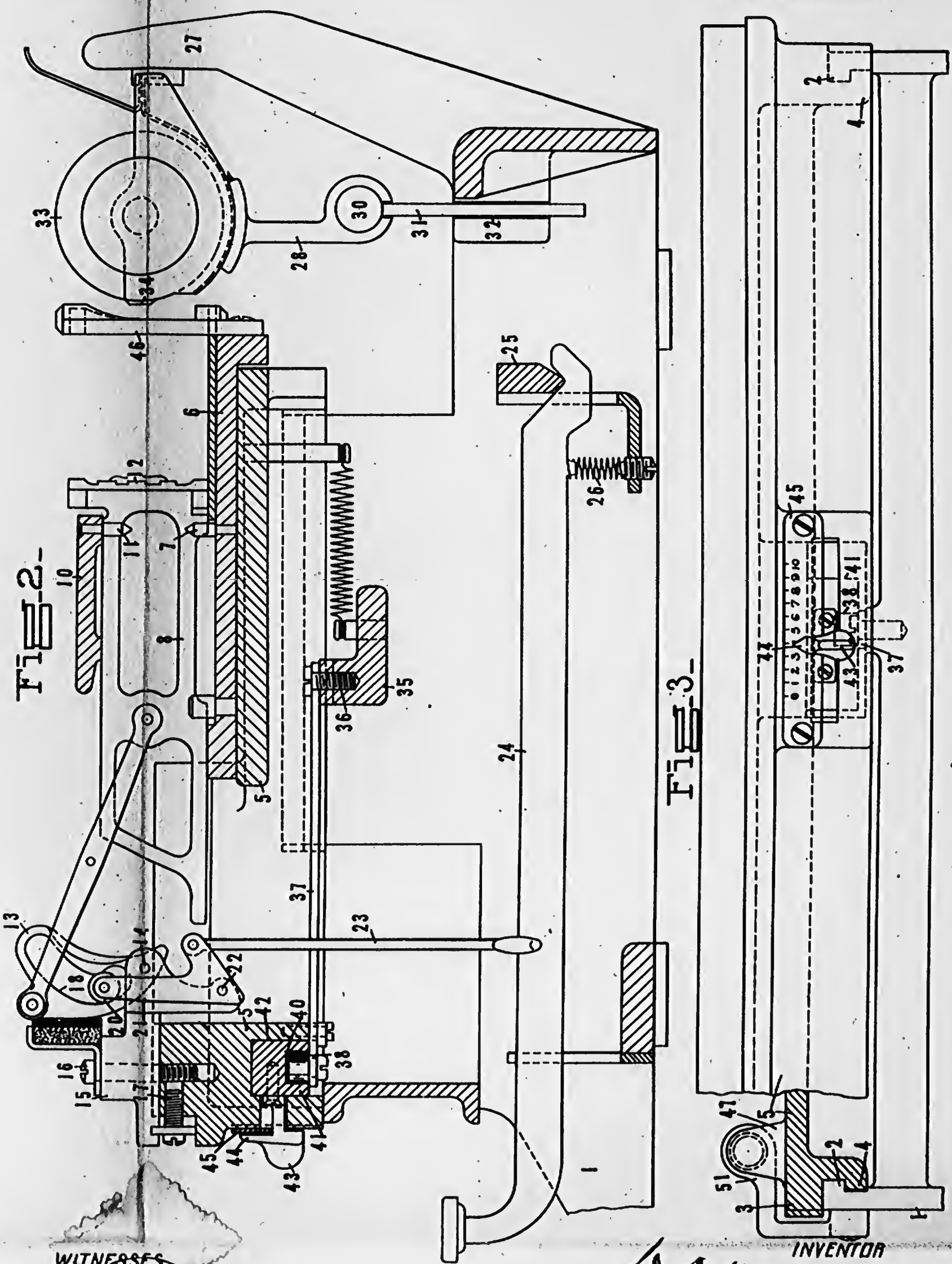

WITNESSES.

Norman Perry

Daniel J. Dunn

INVENTOR

W. A. Lorenz

BY

Duell, Warfield & Duell

ATTORNEYS.

399

W. A. LORENZ.

TYPE WRITING MACHINE.

APPLICATION FILED APR. 16, 1909.

1,123,771.

Patented Jan. 5, 1915.

3 SHEETS—SHEET 3.

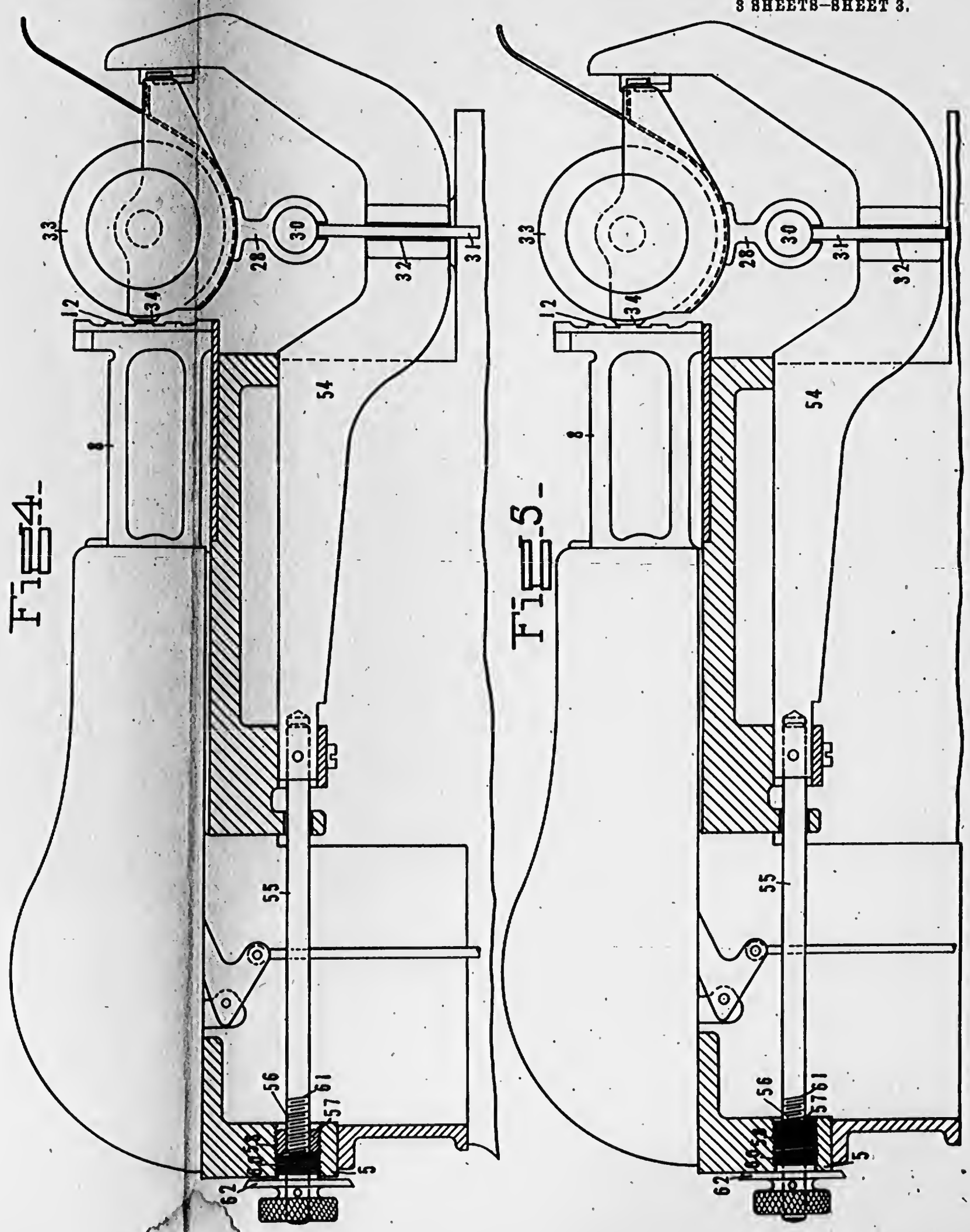

WITNESSES

Norris Perry

Daniel J. Dunn

INVENTOR

W. A. Lorenz

BY

Duell, Warfield & Duell

ATTORNEYS.

UNITED STATES PATENT OFFICE.

WILLIAM A. LORENZ, OF HARTFORD, CONNECTICUT, ASSIGNOR, BY MESNE ASSIGNMENTS, TO THE NOISELESS TYPEWRITER COMPANY, OF MIDDLETOWN, CONNECTICUT, A CORPORATION OF CONNECTICUT.

TYPE-WRITING MACHINE.

1,123,771. Specification of Letters Patent. Patented Jan. 5, 1915.

Application filed April 16, 1909. Serial No. 490,210.

To all whom it may concern:

Be it known that I, WILLIAM A. LORENZ, a citizen of the United States, residing at Hartford, in the county of Hartford and State of Connecticut, have invented certain new and useful Improvements in Type-Writing Machines, of which the following is a full, clear, and exact description, such as will enable others skilled in the art to which it appertains to make and use the same.

This invention relates to typewriting machines and one of the objects thereof is to provide new and improved means for changing the relation of the platen with respect to the printing mechanism.

Another object is to provide, in a machine employing type bars which have a limited thrust in the direction of the platen, means whereby the entire bank of type bars and their actuating mechanisms may be moved toward or from the platen.

Another object is to provide a new and improved device for gaging the thickness of paper or the number of sheets to be inserted in the platen carriage and upon which printing is to be effected.

A further object is to provide improved means for indicating the position of the type-bars relative to the platen.

Other objects will be in part obvious and in part pointed out hereinafter.

The invention accordingly consists in the features of construction, combinations of elements and arrangement of parts which will be exemplified in the construction hereinafter set forth, and the scope of the application of which will be indicated in the following claims.

In the accompanying drawings, wherein is illustrated one of the various possible embodiments of my invention, Figure 1 is a plan view of a portion of a typewriting machine, showing the arrangement of the type-bars and their actuating devices; Fig. 2 is a central longitudinal section through the machine, showing one of the type-bars and its actuating mechanism in elevation; Fig. 3 is a front view of a portion of Figs. 1 and 2, showing the indicator, a portion of the top plate of the machine being shown in section; Fig. 4 shows a modified form of paper gaging device in one position; and Fig. 5 shows the same in another position.

Similar reference characters refer to similar parts throughout the several views of the drawings.

Referring now to the drawings, 1 represents the frame of the machine, which is provided at the upper portion of each of its side members with a tongue 2 adapted to engage projecting tongues 3 and 4 of a top plate 5. This top plate is movable from front to rear of the machine by means hereinafter described. The top plate 5 is provided with a plate 6 having pins 7 for guiding the type-bars 8 at their lower edges, the upper edges of the type-bars being supported and guided by an upper plate 10 having depending guide-pins 11. The type-bars 8, in the present instance, are provided with a plurality of type faces 12.

The actuating mechanisms for the several type-bars, one of which is shown in elevation in Fig. 2, comprises toggle cams 13 pivoted at 14 in blocks 15 adjustably mounted upon the plate 5. These blocks are held in position upon said plate by clamp screws 16, and each block may be independently adjusted as by means of an adjusting screw 17. The cam groove 18 of the toggle cam 13 is traversed by a roller 20 carried by a lever 21 which is pivoted at 22 to depending portions of the blocks 15, said lever being adapted to be swung by means of a link 23 connected with the key-lever 24. The key-levers, in the present instance, are pivoted upon the bar 25 and are held in their normal upward positions as by means of springs 26.

Affixed to the rear portion of the machine is a fixed abutment 27 against which rests the rear portion of the carriage frame. The carriage frame is provided with a pair of depending brackets 28 which slide upon the carriage rail 30, the latter having secured thereto a pair of vertical guides 31 which may be moved vertically in guides 32 in the frame of the machine.

The carriage frame is provided with the usual platen roller 33 in front of which is located a straight faced platen 34 the rear surface of which conforms to the contour of the platen roller. Fastened to the frame

of the machine is a cross member or brace 35, to which is secured a pivot screw 36, said screw engaging a rod or link 37, the other end of which is provided with a roller 38 which runs in a cam slot 40 of a cam slide 41. This slide moves endwise in a suitable groove or slot 42 provided in the front portion of the plate 5 and may be adjusted by means of a projecting post or finger piece 43 attached to the slide. This finger 43 is provided with a pointer 44 which passes over a scale 45 fastened upon the front portion of the plate 5 as shown in Fig. 3 of the drawings. By moving the pointer to the left, the cam slot 40 will pass over the roller 38 and move the entire top plate 5, together with the type guide 46 secured thereto, the actuating mechanism and the type-bars, rearwardly, and by moving the pointer to the right, all the above parts are moved forwardly or toward the keyboard of the machine.

The graduation of the scale 45, shown in Fig. 3, may be such as will indicate to the operator the number of sheets of paper to be inserted in the carriage, and by bringing the pointer to the figure indicative of that number of sheets, the parts may be so adjusted that the type-bars will effect printing properly upon that number of sheets.

While the above described mechanism is useful to the operator in deciding where to position the type with relation to the platen when sheets of a predetermined thickness are employed, the operator may not know precisely where to place the type with relation to the platen when paper of a different or unknown thickness is to be employed. In order, however, to enable the operator to decide at once the proper place to adjust the type with relation to the platen under the last mentioned conditions, a paper gaging device, shown in Figs. 1 and 3, is employed. This paper gaging device comprises an upstanding bracket or finger 51 fixed to the frame of the machine, having a projecting portion 52 provided with a gaging face 53, and coöperating with this part is a similar bracket or finger 47 carried by the sliding plate 5. This part has also the forwardly extending portion 48 provided with a gaging face 50 which opposes face 53. This last-mentioned bracket may be adjustable in the top plate 5 if desired, or it may be affixed thereto as shown in the drawings. When it is desired to gage a certain thickness of paper, it is inserted between the gaging faces 50 and 53 which have previously been separated. The gaging face 53 is then closed upon the paper pressing it against the gaging face 50. When the gaging faces have been closed upon the paper with the proper pressure, the paper is then slipped from between the said faces and inserted in the carriage, in which position the entire top plate, together with the type-guide 46, the type-bars and their actuating mechanisms, will be positioned properly for printing with the desired degree of pressure.

From the above description it will be seen, therefore, that the top plate 5 which carries the bank of type-bars together with the actuating devices therefor, is movable from front to rear of the machine so as to vary the relation between the type faces and the printing platen, as when it is desired to effect printing upon a greater or less number of sheets or sheets of different thicknesses inserted in the platen carriage.

In Figs. 4 and 5 of the drawings is shown a different embodiment of the paper gaging device wherein the same coöperates with the center-tie. In this embodiment the front top portion of the frame of the machine is not made adjustable as in the preceding embodiment, but the center-tie of the machine, represented at 54, which carries the platen carriage, is movable forward and backward by means of a suitable adjustment, said adjustment, in the present instance, comprising a rod 55 threaded at 56 in an adjustable nut 57. Nut 57 is threaded at 58 in the frame of the machine. The thread 60 of the nut 57, in the present instance, may be of a relatively fine pitch, and the thread 61 of the rod 55 of a coarse pitch, so that by turning nut 57 as by means of the knob the difference in the pitches of the thread will provide a suitable forward movement for the rear end of the rod 55 and also for the center-tie 54. The knob of the nut 57 is provided with an enlarged collar 62. By screwing the collar 62 closely against the frame 5, no space will be left between that part and the frame, as shown in Fig. 5; but by a rotation of nut 57, in the opposite direction, the collar 62 may be moved from the frame as shown in Fig. 4, leaving a space between said collar and the frame. This space may be enlarged until the desired number of thicknesses of paper to be printed upon may be inserted. The face of collar 62 may then be closed against the paper and the paper removed therefrom and inserted in the carriage, the platen of which will then be in the proper position to receive printing from the types. It will, accordingly, be seen that I have provided mechanism well adapted to attain, among others, all the ends and objects above pointed out in a simple, yet efficient manner.

The operation of changing the relative position between the types and the platen may be easily and conveniently effected from a position near the key-board and the amount of such adjustment may be readily determined by the operator by means of a scale upon the front portion of the machine. The gaging devices shown in both

embodiments of the invention are of simple construction and will operate with great facility to effect the relative adjustment between the platen and the types whereby printing may be effected with the desired degree of pressure.

As many changes could be made in the above construction and many apparently widely different embodiments of this invention could be made without departing from the scope thereof, it is intended that all matter contained in the above description or shown in the accompanying drawings shall be interpreted as illustrative and not in a limiting sense.

It is also to be understood that the language used in the following claims is intended to cover all of the generic and specific features of the invention herein described and all statements of the scope of the invention, which, as a matter of language, might be said to fall therebetween.

Having described my invention, what I claim as new and desire to secure by Letters Patent is:

1. In a typewriting machine, in combination, a relatively fixed key board, a type bed having a plurality of type carriers thereon, a platen, and means for moving the type bed relatively to said key board and platen.

2. In a typewriting machine, the combination with a platen fixed against rearward movement, of a bank of type bars, a key lever for each type bar, intermediate mechanism between each key lever and each type bar for actuating the same, and means for simultaneously adjusting a plurality of said type bars and their intermediate mechanism bodily toward or from the platen and relatively to the key levers.

3. In a typewriting machine, the combination with a frame, of a platen rigidly held against movement in a fore and aft direction at all times, a plurality of type bars and actuating mechanism therefor, and means for simultaneously adjusting the type bars and actuating mechanism toward and from the fixed platen.

4. In a typewriting machine, the combination with the platen carriage carrying a relatively fixed platen, a plurality of type-bars, actuating mechanism therefor, slidable supports for the actuating mechanism and the type-bars, and a single means for moving said supports forward and backward, whereby the type-bars and their actuating mechanism are adjusted toward or from the platen.

5. In a typewriting machine, the combination of a platen, means for preventing a movement of the platen during printing, a plurality of type carriers, actuating mechanism therefor, and cam means for moving the actuating mechanism and the type-bars toward or from the platen for varying the strength of the impressions made by the type.

6. In a typewriting machine, the combination with the platen carriage carrying the platen, a fixed abutment for the platen carriage, a plurality of type carriers, actuating mechanism therefor, cam means for moving said actuating mechanism and the type carriers toward or from the platen, and means for indicating the extent of movement given those parts.

7. In a typewriting machine, the combination with the platen carriage provided with a fixed platen, an abutment against which the platen carriage rests, a plurality of type carriers, actuating means therefor, a slidable support for the actuating mechanism and the type carriers, and cam means for moving said support endwise to vary the position of the actuating mechanism and type carriers with respect to the platen.

8. In a typewriting machine, the combination with the platen carriage, of a platen carried thereby, an abutment which forms a backing for the platen carriage and prevents yielding thereof during printing, a plurality of type-bars, a slidable plate upon which the type-bars rest and across which they slide when projected to impression, guides for the type-bars positioned upon said plate, actuating mechanism for the type-bars positioned upon said slidable support, and cam means coöperating with said support and adapted to move the same forwardly or rearwardly, whereby the type carriers and actuating mechanism are correspondingly moved with respect to the platen.

9. In a typewriting machine, the combination with the platen carriage, a platen carried thereby, a fixed abutment for the platen carriage, a plurality of type carriers, actuating mechanism therefor, a plate mounted to slide upon suitable guides provided in the frame of the machine, said plate being interposed in the support of the type carriers, means for moving said plate and the actuating mechanism of the type-bars toward or from the platen, and means for indicating the extent of such movement.

10. In a typewriting machine, the combination with the platen carriage, a platen carried thereby, a fixed abutment for the platen carriage, a support mounted to slide in suitable guides formed in the frame of the machine, a plurality of type carriers resting upon said support, actuating mechanism for the type carriers, blocks for supporting said actuating mechanism adjustably mounted on said support, and cam means for moving said support forward and backward, whereby the actuating mechanism and the type carriers may be adjusted with respect to the platen.

11. In a typewriting machine, the combination with the platen carriage, a platen carried thereby, a fixed abutment for the platen carriage, a plurality of type carriers, actuating mechanism therefor, a support for said type carriers and actuating mechanism mounted in suitable guides provided in the frame of the machine, said support being slidable forwardly or backwardly in said guides, and cam means for moving said support, whereby the type carriers and actuating mechanism may be moved toward or from the platen.

12. In a typewriting machine, the combination with the platen carriage, a platen carried thereby, a fixed abutment for the platen carriage, a plurality of type carriers, actuating mechanism therefor, a support mounted to slide upon suitable guides provided in the frame of the machine, the type carriers and the actuating mechanism resting upon said support, cam means operative from a position near the key-board for moving said support forwardly or rearwardly, and a scale coöperating with said cam means to indicate the amount of movement given said support.

13. In a typewriting machine, the combination with the platen carriage, a platen carried thereby, a fixed abutment located behind the platen carriage and adapted to hold the same against recession during printing, a plurality of type carriers, actuating mechanism therefor, a slidable frame interposed between the support of the type carriers and the actuating mechanism, said frame being slidable transversely in guides formed in the frame of the machine, cam means coöperating with said frame whereby the latter, the type carriers and actuating mechanism may be moved toward or from the platen, a scale, and means coöperating with said scale for indicating the extent of such movement.

14. In a typewriting machine, the combination with the platen carriage, a platen carried thereby, a fixed abutment for the platen carriage, a plate mounted to slide forwardly and rearwardly in suitable guides provided in the framework of the machine, type carriers mounted upon said plate, actuating mechanism for the type carriers, adjustable blocks mounted upon said plate upon which said actuating mechanisms are pivotally connected, a member mounted to slide in the front wall of the frame of the machine, said member being provided with a cam-slot, a roller adapted to traverse said cam-slot, links connecting said roller with the frame of the machine, means for moving said slidable member whereby said roller will be caused to traverse said cam-slot, thereby moving said plate and the type carriers and actuating mechanism with respect to the platen, a scale located upon the front wall of the machine, and means connected with said slidable member which coöperates with said scale to indicate the extent of movement of said slidable member, whereby the position of the type carriers and actuating mechanism with respect to the platen may be determined.

15. In a typewriting machine, the combination with the platen carriage, a platen carried thereby, means for holding the platen carriage against recession during printing, a plate mounted in suitable guides provided in the framework of the machine adapted to slide forwardly and rearwardly therein, a plurality of type carriers mounted upon said plate, an actuating device for each of said type carriers, an adjustable block for each of said actuating devices adjustably mounted upon said plate, means for moving said plate in said guides, and means coöperating with said last-mentioned means to indicate the extent of such movement.

16. In a typewriting machine, the combination with the platen carriage and a platen carried thereby, of means for preventing a recession of the carriage during printing, a plate mounted to slide in the frame of the machine, a plurality of type carriers mounted upon said plate, actuating mechanism for the type carriers mounted upon said plate, means for sliding said plate whereby the type carriers and actuating mechanism may be moved toward or from the platen, and a paper gage one portion of which is carried upon the frame of the machine and the other portion upon said slidable plate.

17. In a typewriting machine, the combination with the platen carriage mounted in a fixed portion of the frame of the machine, a plurality of type carriers, an actuating device for each of said type carriers, a slidable support for said type carriers and the actuating devices, and a paper gage comprising a pair of opposed members one of which is mounted upon a fixed portion of the frame of the machine and the other thereof upon said support.

18. In a typewriting machine, the combination with the platen carriage mounted in a fixed portion of the frame of the machine, a plurality of type carriers, an actuating device for each of said type carriers, a support slidably mounted in the frame of the machine for said type carriers and the actuating devices, means for moving said plate toward or from the platen carriage, a paper gaging device comprising a pair of opposed members between which the paper is received, one of said members being mounted upon the frame of the machine and the other thereof upon said support, means for moving said support, and means coöperating

with said last-mentioned means whereby the relative position of the members of said paper gaging device may be indicated.

19. In a typewriting machine, in combination, a movable type-carrier, a platen, the one being adjustable with respect to the other, a fixed member, an adjacent member movable with the adjustable element to indicate by the space between said members the amount of space between the platen and the end of the path of travel of said type-carrier in printing, and means independent of the platen adapted to limit the path of travel of the carrier toward said platen.

20. In a typewriting machine, the combination with the platen carriage carrying the platen, a plurality of type-bars and the actuating mechanism therefor, a movable support for the actuating mechanism and the type-bars whereby they may be moved toward or from the platen, a paper gaging device comprising a pair of opposed jaws one of which is carried by a fixed portion of the machine and the other thereof by said slidable support, means for moving said support whereby said jaws are moved relatively to each other, and means coöperating with said moving means for indicating the position of said jaws relative to each other.

21. In a typewriting machine, in combination, a movable type-carrier, a platen, the one being adjustable with respect to the other, a fixed member, an adjacent member movable with the adjustable element an amount proportional to the amount of adjustment of said element to indicate by the space between said members the amount of space between the platen and the end of the path of travel of said type-carrier in printing, and means independent of the platen adapted to limit the path of travel of the carrier toward said platen.

22. In a typewriting machine, the combination with the frame of the machine comprising a fixed portion and a movable portion, a platen carriage mounted upon the fixed portion, type-bars and actuating mechanism mounted upon the movable portion, and a paper gage comprising a pair of opposed members one of which is mounted upon the fixed portion of the machine and the other upon the movable portion thereof.

23. In a typewriting machine, the combination with the frame of the machine comprising a fixed portion and a movable portion, a platen carriage mounted upon the fixed portion, type-bars and actuating mechanism mounted upon the movable portion, and a paper gage comprising a pair of opposed members one of which is mounted upon the fixed portion of the machine and the other upon the movable portion thereof, means for moving the movable portion of said frame, and means for indicating the extent of movement given to the same coöperating with said moving means.

24. In a typewriting machine, in combination, a platen, a plurality of front strike type bars adapted to coact therewith, means for adjusting each of said type bars separately, and means adapted to simultaneously adjust a plurality of the type bars bodily toward and from the platen to vary the space between the end of their path of travel and the printing surface of the platen.

25. In a front strike typewriting machine, in combination, a platen, a plurality of pressure operated type carriers having a limited path of travel toward the platen and arranged radially to the printing point, key levers for actuating said type carriers, means for adjusting each type carrier separately, and other means for adjusting a plurality of said type carriers by moving the same bodily relatively to the platen and the key levers.

In testimony whereof I affix my signature, in the presence of two witnesses.

WILLIAM A. LORENZ.

Witnesses:
EDWARD H. LORENZ,
NELLIE PHOENIX.

405

L. R. ROBERTS.

TYPE WRITING MACHINE.

APPLICATION FILED NOV. 18, 1914.

1,214,371.

Patented Jan. 30, 1917.

FIG. 3.

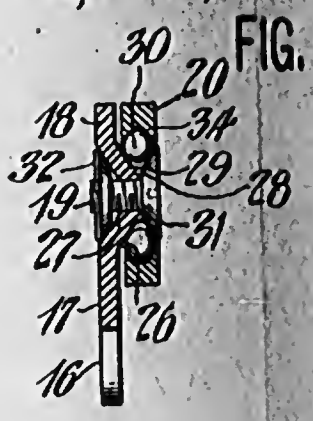

FIG. 4.

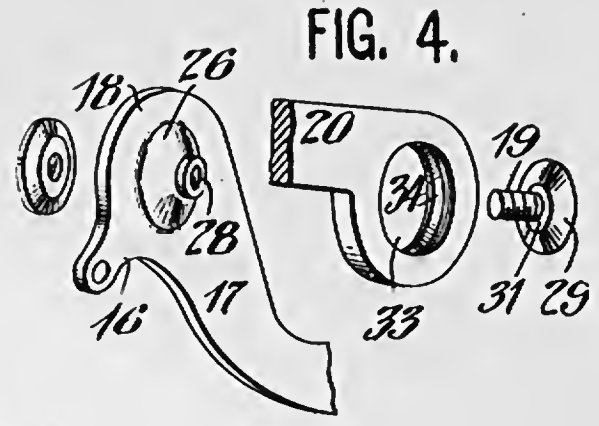

FIG. 1.

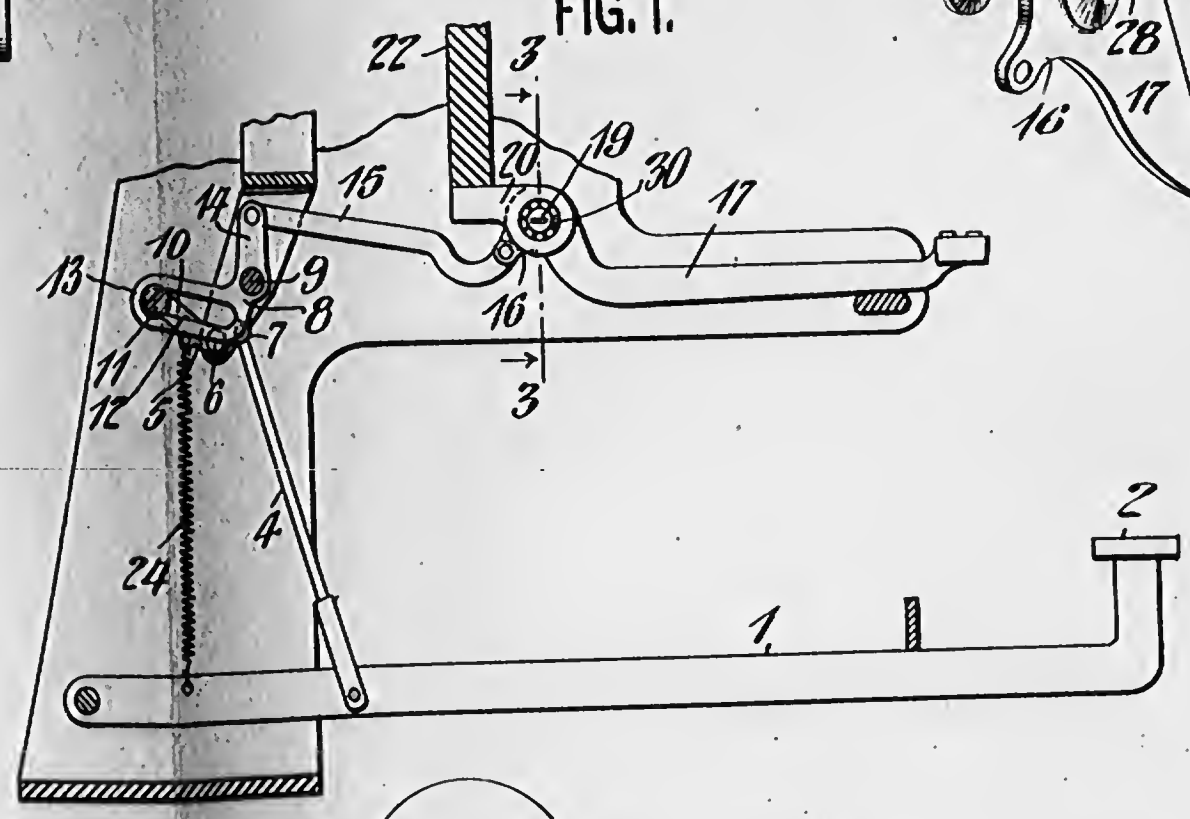

FIG. 5.

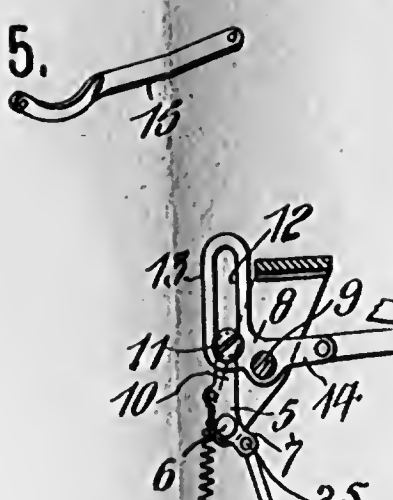

FIG. 6.

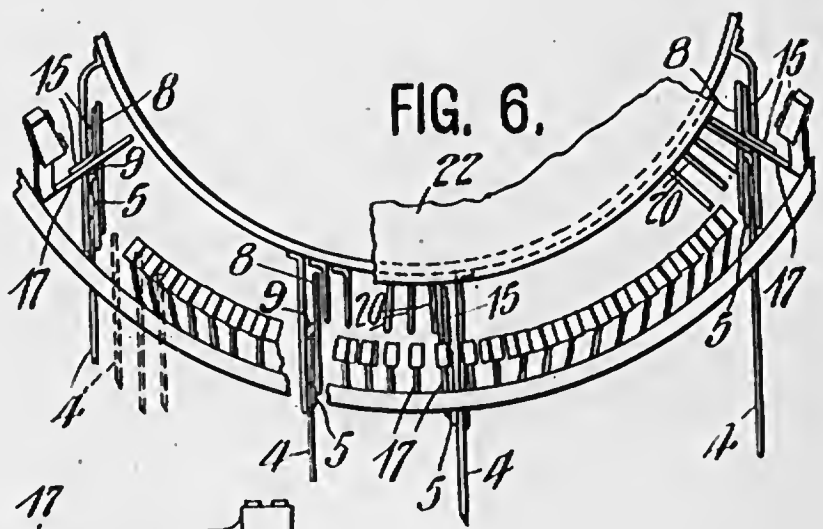

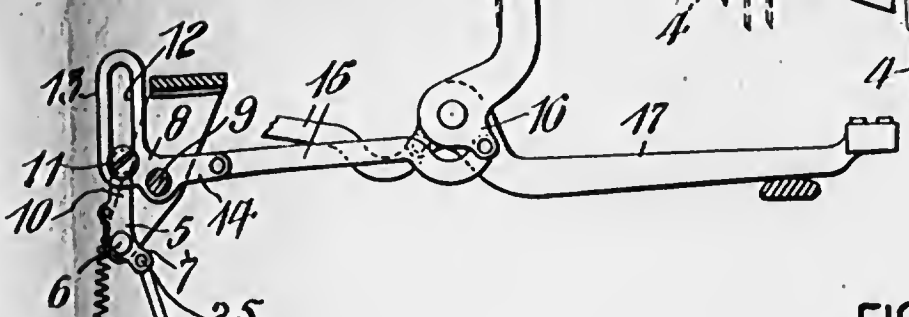

FIG. 2.

WITNESSES:

W. C. Westphal

F. E. Alexander

INVENTOR:

Lyman R. Roberts

BY B. B. Stickney

ATTORNEY

UNITED STATES PATENT OFFICE.

LYMAN R. ROBERTS, OF RUTHERFORD, NEW JERSEY, ASSIGNOR TO UNDERWOOD TYPE-WRITER COMPANY, OF NEW YORK, N. Y., A CORPORATION OF DELAWARE.

TYPE-WRITING MACHINE.

1,214,371. Specification of Letters Patent. Patented Jan. 30, 1917.

Application filed November 18, 1914. Serial No. 872,682.

To all whom it may concern:

Be it known that I, LYMAN R. ROBERTS, a citizen of the United States, residing in Rutherford, in the county of Bergen and State of New Jersey, have invented certain new and useful Improvements in Type-Writing Machines, of which the following is a specification.

This invention relates to improvements in type-bar actions for typewriting machines, its primary object being the provision of a simple, compact and reliable actuating mechanism, in which a powerful and uniform action of the type-bars is combined with an easy and elastic touch of the keys, and with the reduction, to a great extent, of the noise ordinarily incidental to operation.

According to the present invention, the type-bar is moved rapidly toward the printing point in making its printing stroke, and is brought gradually to rest by means of a toggle, just before the type strikes the platen; the end of the bar whereon the type is positioned springing past the point at which the hub of the bar is brought to rest by the toggle, so that the type is impressed upon the work-sheet. In this way, the noise is avoided which usually takes place when the type-bars contact with the anvil or stop usually provided upon typewriting machines of this kind, while at the same time the blows of the types upon the platen are apt to be less noisy. The construction is such that the type also springs rapidly away from the platen in order to clear the type on the next bar actuated, which, by this time is approaching the platen. While the type-bar is brought gradually to rest by means of the toggle, still the speed of the machine is not reduced, because the driving arm of the toggle preferably starts to move at a slow speed and gradually works up automatically to a high speed as the key completes its stroke. Thus all the advantages of a gradual arrest of the type-bars are secured, without sacrificing the speed of operation, and moreover, the touch on the key may be excellent, owing to the leverage on the type-bar being very great at the beginning of the printing stroke, and relatively small at the completion thereof.

Each toggle preferably comprises a driving arm, pivoted upon the machine frame, and a thrust link connecting said driving arm to the type-bar; the relation of the link and driving arm being normally cross-wise or perpendicular, but changing during the printing stroke to a substantially parallel or end-to-end relation, while the type-bars are brought gradually to rest, even if the speed of operation is very high.

The driving arms of the toggles may work in vertical or parallel planes, and may have their pivots arranged in an arc struck substantially from the printing point, so that the relation of the driving arm to its type-bar may be the same for all the type-bars, the forward ends of certain of the links being bent or twisted to conform to the planes of movement of their respective type-bars. Each toggle-driving arm is preferably an arm of a bell-crank driving lever, which has a pin-and-slot connection to a key-driven bell crank, such as to give the key great leverage at the start of the printing stroke and small leverage at the completion of the stroke. The toggle is preferably positively arrested when substantially in straightened position, such arrest being effected, in the present instance, by means of a stud on the key-driven bell crank engaging the end of the slot on the toggle-driving bell crank; although other arresting means may be provided.

Other features and advantages will hereinafter appear.

In the accompanying drawing, Figure 1 is a sectional elevation of a portion of a typewriting machine embodying the present invention, the parts being shown in their normal position of rest. Fig. 2 is a similar view, but showing a key depressed, and a type-bar thrown up to the platen. Fig. 3 is a detail sectional view of the improved roller bearing, taken on the line 3—3 of Fig. 1. Fig. 4 is a perspective view of the parts of the bearing disassembled. Fig. 5 is a perspective view of one of the links which actuate the side type-bars. Fig. 6 is a fragmental front elevation, on a reduced scale, showing the application of the invention to both the central and side type-bars.

The pivotally-mounted key levers 1, provided with keys 2, are connected by upwardly-extending links 4 to bell-crank levers 5 mounted on pivots 6, the links 4 being jointed to their short arms 7. These bell-cranks 5 constitute interponent levers designed to operate main bell-crank-levers 8, pivoted at 9, and constituting the driving

arms or members of the afore-mentioned toggles, for which purpose the long arm 10 of each bell crank 5 is equipped with a terminal stud 11, or like projection, that works in a longitudinal slot 12 formed in the long arm 13 of the corresponding main driving lever 8, the length of the slot being sufficient to permit an extensive movement of the stud. The short arm 14 of each main or toggle-driving lever 8 normally projects upwardly, and is connected at its free end by a horizontal thrust link 15 that constitutes the other member of the toggle, to a lateral arm 16, formed on the rear end 18 of a type-bar 17 adjacent to the point 19 where the bar is fulcrumed on its hanger 20, said type-bar swinging in the usual manner toward and from the platen 21. The hangers 20 may be connected with the usual type-bar segment 22, fixed on the machine frame. The arrangement of the toggle-driving levers is such that their pivots 9 form an arc of which the printing point is substantially the center; and with reference to the links 15, it may be stated that while those in the center of the machine have straight forward ends, the forward ends of the side links are twisted to conform to the planes in which their associated type-bars move.

The long arms 10 and 13 of the toggle-driving and key-driven levers 5 and 8 are disposed at the same side of their respective pivots 6 and 9, and, when in normal position, extend in substantially the same direction therefrom, the stud 11 on the former arm being held at the outer end of the slot 12 in the latter arm by means of a return spring 24, which is connected between the stud-carrying arm and the key lever. In consequence, when the latter is depressed, the various parts move from their normal position of rest, shown in Fig. 1, to the position shown in Fig. 2, the key-driven interponent lever 5 rocking clockwise about its pivot 6, whereby its stud 11 is caused to travel inwardly along the slot 12, with the result that the driving lever 8 is rocked in the same direction about its pivot 9, and the toggle is actuated to swing the type-bar 17 upwardly and rearwardly toward the platen and to bring its hub or body gradually into a position of rest. The type-bar reaches this position of rest at the same time that the stud reaches the end of said slot, at which time both the stroke of the key and the pivotal movement of the bar are terminated, the bar being then in vertical position with its type close to, but out of contact with the platen, while the short arm 14 of the driving lever and the toggle link 15 substantially aline with one another. The end of the bar on which the type is located springs or snaps forward to the platen, however, by momentum, as indicated in dotted lines at Fig. 2, so as to effect the printing, and immediately thereafter springs back from the platen, thus preventing it from interfering with the movement of the bar struck by the next key, and obviating blurring. The springing of the type to the platen may be due partly to the resilience of the type-bar and partly to the yielding of the connections. At the beginning of the key stroke, the speed at which the type-bar is moved is slow and gradual, in comparison with that of the key, owing to the initial position of the stud at the outer end of the slot 12, where the leverage of the arm 10 of the key-driven lever upon the slotted arm of the toggle-driving lever reaches its maximum, but as the travel of the stud continues, the leverage is reduced and the speed of the type-bar relative to the key is proportionately increased, due to the stud approaching the pivot or fulcrum 9 about which the toggle-driving lever turns. The speed of the type-bar relative to the key is further accelerated by reason of the gradual decrease of the leverage exerted by the link 4 upon the key-driven lever, due to the downward swinging movement of the arm 7 of said lever, which tends to bring its point 25 of pivotal connection with the link into alinement with the latter and the pivot 6, so that the arrangement as a whole results, therefore, in an easy touch and a quick type stroke, and insures sharpness of impression, as well.

The ball bearings for the type-bar 17 are preferably constructed as shown in detail in Figs. 3 and 4. The central portion of the enlarged end 18 of the bar is first drawn out so as to produce on one side of the bar a short open-ended nipple, which is subsequently pressed into the shape of a frusto-conical projection or cup 26, and on the other side thereof a depression or seat 27 of similar shape. The terminal 28 of this cone or cup is drawn slightly outward, and is internally threaded to receive the threaded stem of the screw that constitutes the afore-mentioned fulcrum 19 of the type-bar, the formation of said terminal providing a surface which can readily be threaded and which affords an effective support for the screw stem. The head of the screw is tapered to produce a frusto-conical bearing surface 29 which, when the screw is in position, is opposite and complemental to the surface of the cone or cup 26, and forms therewith an annular groove of V-section for the reception of the balls 30. The screw head is shown as bearing squarely against the end face of the sleeve-like terminal 28, but it can be adjusted if desired, and is slightly flattened on its conical face at the point 31 where the said face and its stem join to facilitate or augment such bearing contact. The concave seat or depression 27

receives a conical-faced nut 32 which is threaded on the screw stem and serves to lock the screw in adjusted position, the provision of the seat obviating the necessity for the use of an additional retaining part for the nut. The aforementioned hanger 20, to which the type-bar is thus connected, is provided with an opening or eye 33 into which the cone 26 and the screw head project, this opening having its wall formed with an annular groove 34 of V-section to complete the raceway.

Variations may be resorted to within the scope of the invention, and portions of the improvements may be used without others.

Having thus described my invention, I claim:

1. In a typewriting machine, the combination with a key lever and a swinging type-bar, of a toggle comprising a pivotally-mounted driving arm and a link connecting said driving arm to the type-bar, and connecting means between said driving arm and said key lever for actuating the toggle during the printing stroke; said toggle being constructed and arranged to be straightened during the printing stroke and thereby bring the hub or body of said type-bar gradually to a position of rest, before its type-carrying end reaches the printing point, while permitting said end to spring forward to the printing point, the toggle, when straightened, being transverse to the line joining the type-bar pivot and the point of connection of the toggle with the type-bar, whereby the toggle positively resists further rotation of the type-bar on its pivot.

2. In a typewriting machine, the combination with a key lever and a type-bar, of a toggle comprising a bell-crank driving lever and a link connecting one arm of said driving lever to the type-bar, and connecting means between the other arm of the driving lever and the key lever comprising a link and lever for actuating the toggle during the printing stroke; said toggle being constructed and arranged to be straightened during the printing stroke and thereby bring the hub or body of said type-bar gradually to a position of rest before its type-carrying end reaches the printing point, while permitting said end to spring forward to the printing point.

3. In a typewriting machine, the combination with a key lever and a type-bar, of a toggle comprising a bell-crank driving lever having one arm extending upwardly and a horizontal link connecting said arm to the type-bar, and connecting means between the other arm of the driving lever and the key lever for actuating the toggle during the printing stroke; said toggle being constructed and arranged to be straightened during the printing stroke and thereby bring the hub or body of said type-bar gradually to a position of rest before its type-carrying end reaches the printing point while permitting said end to spring forward to the printing point, the toggle, when straightened, being transverse to the line joining the type-bar pivot and the point of connection of the toggle with the type-bar, whereby the toggle positively resists further rotation of the type-bar on its pivot.

4. In a typewriting machine, the combination with a key lever and a type-bar, of a toggle comprising a pivotally-mounted driving arm and a link connecting said driving arm to the type-bar, a lever operatively connected to said driving arm, and a connection between the last-named lever and the key lever for actuating the former and the toggle during the printing stroke; said toggle being constructed and arranged to be straightened during the printing stroke and thereby bring the hub or body of said type-bar gradually to a position of rest before its type-carrying end reaches the printing point, while permitting said end to spring forward to the printing point.

5. In a typewriting machine, the combination with a key lever and a type-bar, of a toggle comprising a bell crank driving lever and a link connecting one arm of said driving lever to the type-bar, a lever operatively connected to the other arm of the driving lever, and a connection between the last-named lever and the key lever for actuating the former and the toggle during the printing stroke; said toggle being constructed and arranged to be straightened during the printing stroke and thereby bring the hub or body of said type-bar gradually to a position of rest before its type-carrying end reaches the printing point, while permitting said end to spring forward to the printing point.

6. In a typewriting machine, the combination with a key lever and a type-bar, of a toggle comprising a bell crank driving lever having vertical and horizontal arms and a link connecting the vertical arm to the type-bar, a lever operatively connected to the horizontal arm of the driving lever, and a connection between the last-named lever and the key lever for actuating the former and the toggle during the printing stroke; said toggle being constructed and arranged to be straightened during the printing stroke and thereby bring the hub or body of said type-bar gradually to a position of rest before its type-carrying end reaches the printing point, while permitting said end to spring forward to the printing point.

7. In a typewriting machine, the combination with a key lever and a type-bar, of a toggle comprising a bell-crank driving lever having a slot formed in one arm and a link connecting the other arm of said driving

lever to the type-bar, and a lever connected with the key lever and having a projection extending into said slot to actuate the toggle during the key stroke; said projection moving inwardly along said slot during the key stroke, to accelerate the printing stroke of the type-bar, said toggle arranged to be straightened during the key stroke to bring the hub or body of said bar gradually to a position of rest at the conclusion of said key stroke but before its type-carrying end reaches the printing point, thereby permitting said end to spring forward to the printing point.

8. In a typewriting machine, the combination with a key lever and a type-bar, of a toggle comprising a bell-crank driving lever having one arm extending upwardly and the other arm formed with a slot and a link connecting the first-named arm to the type-bar, and a lever connected with the key and having a projection extending into said slot to actuate the toggle during the key stroke; said projection moving inwardly along said slot during the key stroke, to accelerate the printing stroke of the type-bar, said toggle arranged to be straightened during the key stroke to bring the hub or body of said bar gradually to a position of rest at the conclusion of said key stroke but before its type-carrying end reaches the printing point, thereby permitting said end to spring forward to the printing point.

9. In a typewriting machine, the combination with a key lever and a type-bar, of a connecting train between the key lever and type-bar including a toggle comprising a bell-crank driver and a link connecting one arm of said driver to said type-bar, a lever pivoted intermediate its ends and having one arm slidably connected to the other arm of the driver, and a connection between the other arm of the last-named lever and the key lever to actuate the former and the toggle during the key stroke; said connecting train being constructed and arranged to accelerate the printing stroke of the type-bar and to bring the hub or body of said bar gradually to a position of rest at the conclusion of said key stroke before its type-carrying end reaches the printing point while permitting said end to spring forward to the printing point.

10. In a typewriting machine, the combination with a key lever and a type-bar, of a toggle comprising a bell-crank driver having one arm projecting upwardly and the other arm formed with a slot and a link connecting the first-named arm of said driver to said type-bar, and a lever pivoted intermediate its ends and having one arm connected with the key lever and the other arm provided with a projection extending into said slot to actuate the toggle during the key stroke, said projection moving inwardly along said slot during the key stroke, to accelerate the printing stroke of the type-bar and to bring the hub or body of the latter gradually to a position of rest at the conclusion of said key stroke before its type-carrying end reaches the printing point while permitting said end to spring forward to the printing point.

11. In a type-bar action for typewriting machines, the combination with a key lever and a swinging type-bar, of a connecting train comprising a driving lever, a thrust link connecting one arm of said driving lever to the type-bar, and an interponent lever between the key lever and the other arm of said driving lever arranged to actuate the latter and cause the speed of the driving lever relative to that of the interponent lever to gradually increase during the printing stroke, said link and its connected arm arranged to form a toggle which is moved to a straight line position during the printing stroke, to thereby bring the hub or body of the type-bar gradually to a position of rest before its type-carrying end reaches the printing point, while permitting said end to spring forward to the printing point.

12. The combination with a key lever and a type-bar arranged to swing upwardly and rearwardly to printing position, of a connecting train comprising a bell-crank lever having an upwardly extending arm in rear of the type-bar, a thrust link connecting said arm to the type-bar, and connecting means between the key lever and the other arm of the bell-crank to actuate the latter and thereby cause said upwardly projecting arm to thrust the link forward and swing the type bar up, said link and connected arm forming a toggle arranged to be straightened during the printing stroke and thereby bring the hub or body of the type bar gradually to a position of rest before its type-carrying end reaches the printing point, while permitting said end to spring forward to the printing point, the toggle, when straightened, being transverse to the line joining the type-bar pivot and the point of connection of the toggle with the type-bar.

13. The combination with a key lever and a type-bar arranged to swing upwardly and rearwardly to printing position, of a connecting train comprising a bell-crank lever having an upwardly extending arm in rear of the type-bar, a thrust link connecting said arm to the type-bar, and connecting means between the key lever and the other arm of the bell-crank to actuate the latter and thereby cause said upwardly projecting arm to thrust the link forward and swing the type-bar up, said link and connected arm forming a toggle arranged to be straightened during the printing stroke and thereby bring the hub or body of the type-bar gradually to a position of rest before its type-carrying end

reaches the printing point, while permitting said end to spring forward to the printing point, said connecting means between the key lever and bell-crank being arranged to accelerate the speed of the bell-crank relative to that of the key lever, whereby the speed of the type-bar relative to that of the key lever is accelerated during the printing stroke.

14. The combination with a key lever and a type-bar arranged to swing upwardly and rearwardly to printing position, of a connecting train comprising a bell-crank lever having an upwardly extending arm in rear of the type-bar, a thrust link connecting said arm to the type-bar, and connecting means between the key lever and the other arm of the bell-crank to actuate the latter and thereby cause said upwardly projecting arm to thrust the link forward and swing the type-bar up, said link and connected arm forming a toggle arranged to be straightened during the printing stroke and thereby bring the hub or body of the type-bar gradually to a position of rest before its type-carrying end reaches the printing point, while permitting said end to spring forward to the printing point, said connecting means between the key lever and bell-crank comprising an interponent lever having a sliding connection with the bell-crank and arranged so that the point of contact at which the driving power of the interponent lever is applied to the bell-crank moves toward the fulcrum of the bell-crank during the type stroke and thereby accelerates the speed of the bell-crank and type-bar relative to that of the key lever during the printing stroke.

15. In a typewriting machine, the combination with a swinging type-bar and a key lever, of a connecting train comprising a driving lever, a link connecting the latter with the type-bar, an interponent lever having its fulcrum in fixed position relative to that of the driving lever, said interponent lever having a sliding connection with the driving lever, the point of connection moving toward the fulcrum of the driving lever during the key stroke, and a link connecting the key lever with an arm of said interponent lever, said last-mentioned link and arm being moved, during the key stroke, toward a straight line position, whereby the speed of said interponent lever relative to that of the key lever is accelerated during the key stroke to accelerate the speed of the type-bar, said sliding connection serving to further accelerate the speed of the type-bar by accelerating the speed of the driving lever relative to that of the interponent lever.

16. In a typewriting machine, the combination with an upwardly and rearwardly swinging type-bar and a key lever extending forwardly from its pivot and located beneath the type-bar, of a connecting train between the key lever and type-bar comprising a bell-crank having an upstanding arm in rear of the type-bar fulcrum, a thrust link connecting said arm with the type-bar, said bell-crank having a rearwardly extending slotted arm, an interponent lever having a wrist working in said slot, and a link connecting said interponent lever with the key lever for actuating the interponent lever, the latter so arranged that said wrist moves toward the fulcrum of the bell-crank during the printing stroke to thereby accelerate the speed of the bell-crank relative to that of the interponent lever, said wrist being brought to the end of the slot before the type-carrying end of the type-bar reaches the printing point to thereby form a stop for the key lever and also stop the swinging movement of the hub of the type-bar while permitting said end thereof to spring forward to the printing point.

17. In a typewriting machine, the combination with an upwardly and rearwardly swinging type-bar and a key lever extending forwardly from its pivot and located beneath the type-bar, of a connecting train between the key lever and type-bar comprising a bell-crank having an upstanding arm in rear of the type-bar fulcrum, a thrust link connecting said arm with the type-bar, said bell-crank having a rearwardly extending slotted arm, an interponent lever having a wrist working in said slot, a link connecting said interponent lever with the key lever for actuating the interponent lever, the latter so arranged that said wrist moves toward the fulcrum of the bell-crank during the printing stroke to thereby accelerate the speed of the bell-crank relative to that of the interponent lever, said thrust link and connected arm of the bell-crank forming a toggle which is straightened during the printing stroke to thereby bring the hub or body of the type-bar gradually to a position of rest before its type-carrying end reaches the printing point while permitting said end to spring forward to the printing point, said wrist being brought to the end of its slot as the toggle reaches said straightened position, to thereby form a stop for the key lever, interponent lever and bell crank.

18. In a type-bar action for typewriting machines, the combination with a type-bar arranged to swing from a recumbent position to an upright position at the printing point, of a driving lever comprising an arm extending upwardly from its pivot, a thrust link connected to said arm above said pivot and extending forwardly therefrom and pivoted to the type-bar, a key lever beneath the type-bar, and an accelerating mechanism forming a driving connection between the key lever and said driving lever, said mechanism arranged to accelerate the speed of the driving lever relative to that of the key

411

lever during the key stroke, said thrust link and connected arm forming a toggle moved to a straight line position during the key stroke.

19. The combination with a pivoted type-bar, of a thrust link pivoted thereto to move at its point of connection with the type-bar about the type-bar pivot as a center, a driving lever having an arm pivoted to said link and substantially perpendicular thereto when the type-bar is in its normal position of rest, a key lever, and an accelerating lever actuated by the key lever and having a sliding connection with said driving lever arranged to accelerate the speed of the driving lever relative to that of the accelerating lever during the key stroke, said link and connected arm movable to a position in which they are substantially in line and the carrying end of the type-bar adjacent the printing point at the completion of the key stroke.

LYMAN R. ROBERTS.

Witnesses:
W. O. WESTPHAL,
DELOS G. HAYNES.

412

N. H. ANDERSON.

TYPE WRITING MACHINE.

APPLICATION FILED MAY 27, 1912.

1,261,751.

Patented Apr. 9, 1918.

4 SHEETS—SHEET 1.

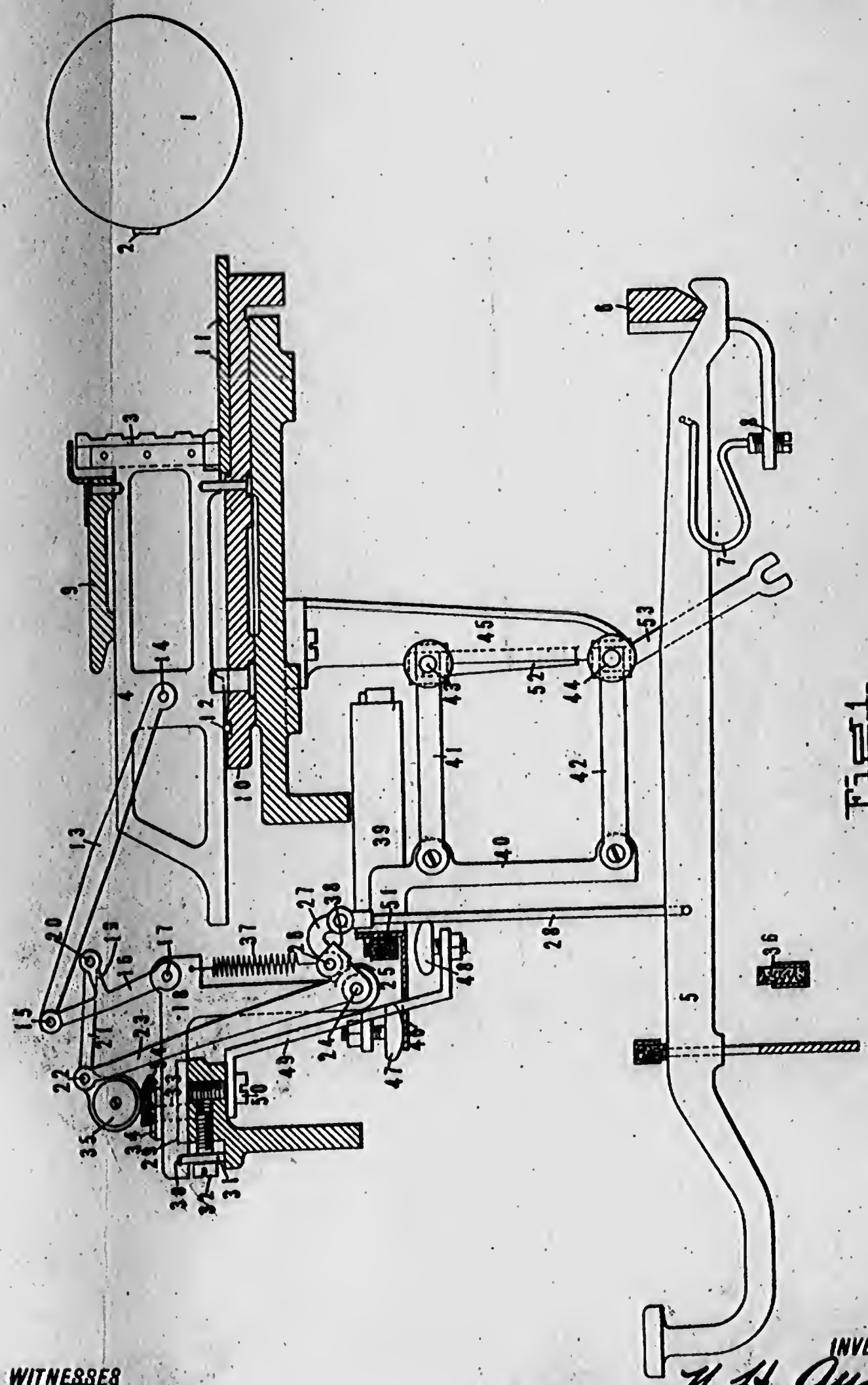

FIG. 1.

WITNESSES

Norman Perry

R. A. Blair.

INVENTOR

N. H. Anderson

BY

Duell, Coarfield & Duell

ATTORNEYS

413

N. H. ANDERSON.
TYPE WRITING MACHINE.
APPLICATION FILED MAY 27, 1912.

1,261,751.

Patented Apr. 9, 1918.
4 SHEETS—SHEET 2.

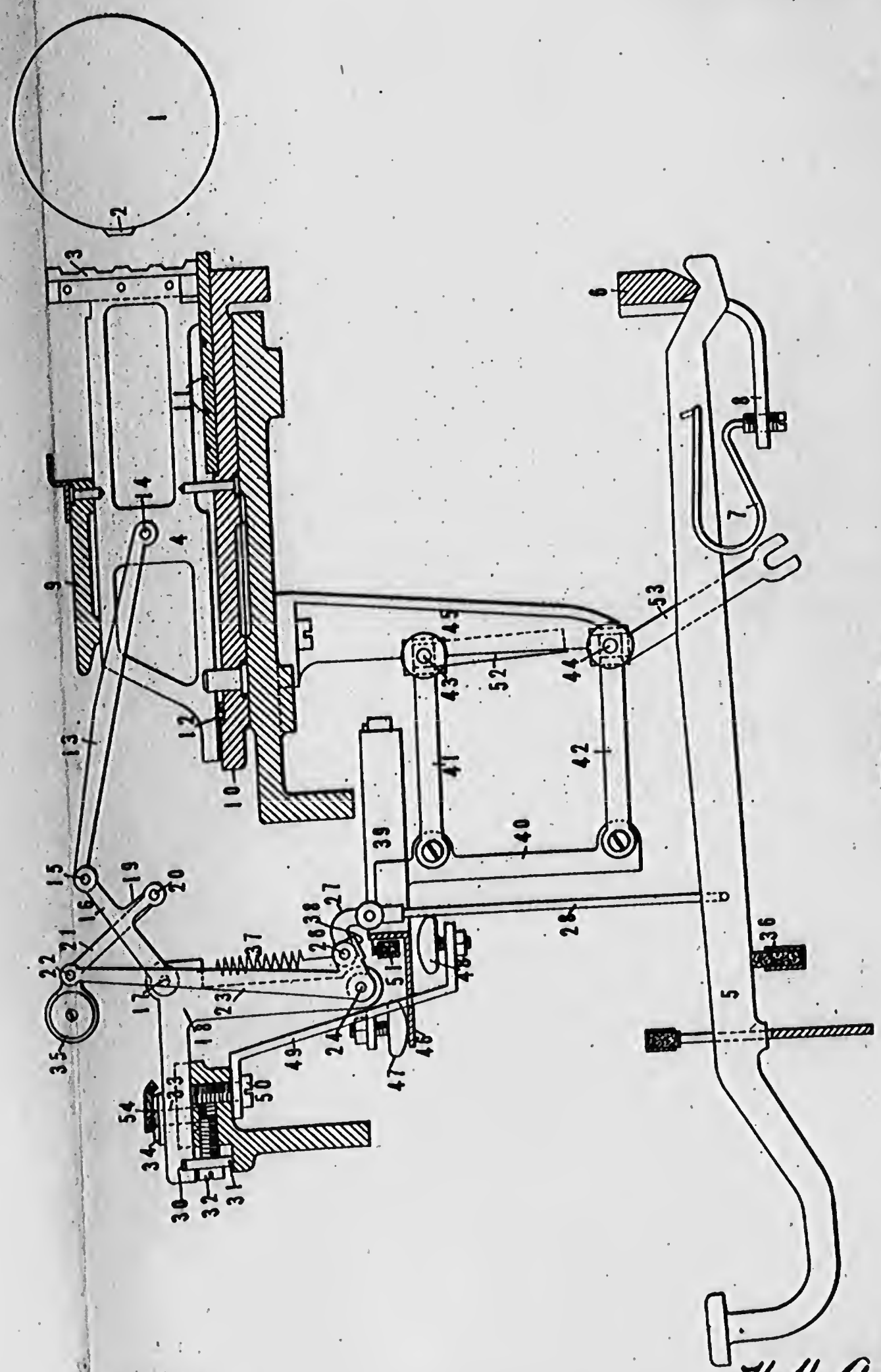

Fig. 2.

WITNESSES
M. V. Perry
T. A. Blair.

INVENTOR
N. H. Anderson
BY
Duell, Mansfield & Duell
ATTORNEYS

414

N. H. ANDERSON.
TYPE WRITING MACHINE.
APPLICATION FILED MAY 27, 1912.

1,261,751.

Patented Apr. 9, 1918.
4 SHEETS—SHEET 3.

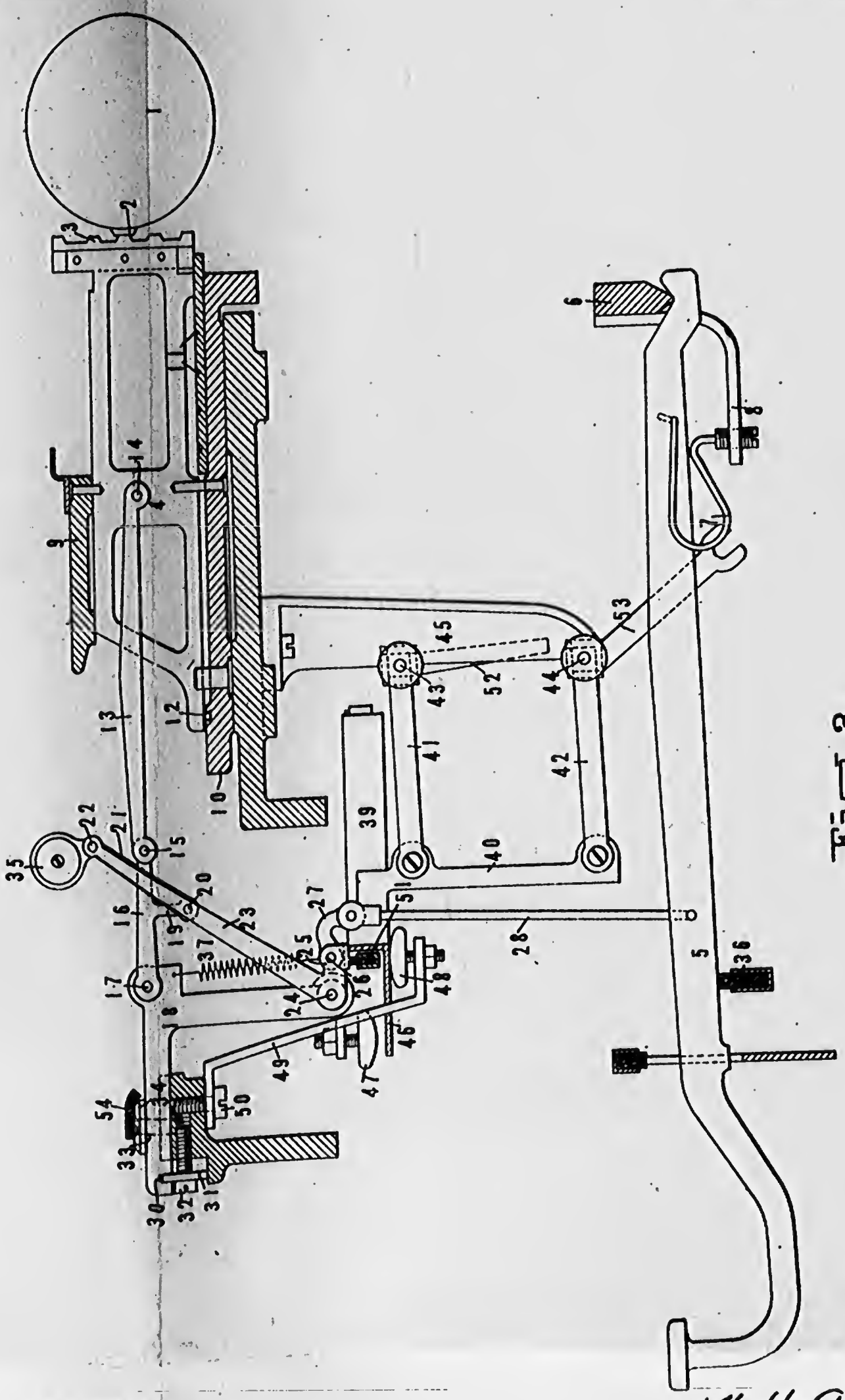

FIG. 3.

WITNESSES
Norris Perry
T. A. Blair

INVENTOR
N. H. Anderson
BY
Duell, Warfield & Duell
ATTORNEYS

415

N. H. ANDERSON.
TYPE WRITING MACHINE.
APPLICATION FILED MAY 27, 1912.

1,261,751.

Patented Apr. 9, 1918.
4 SHEETS—SHEET 4.

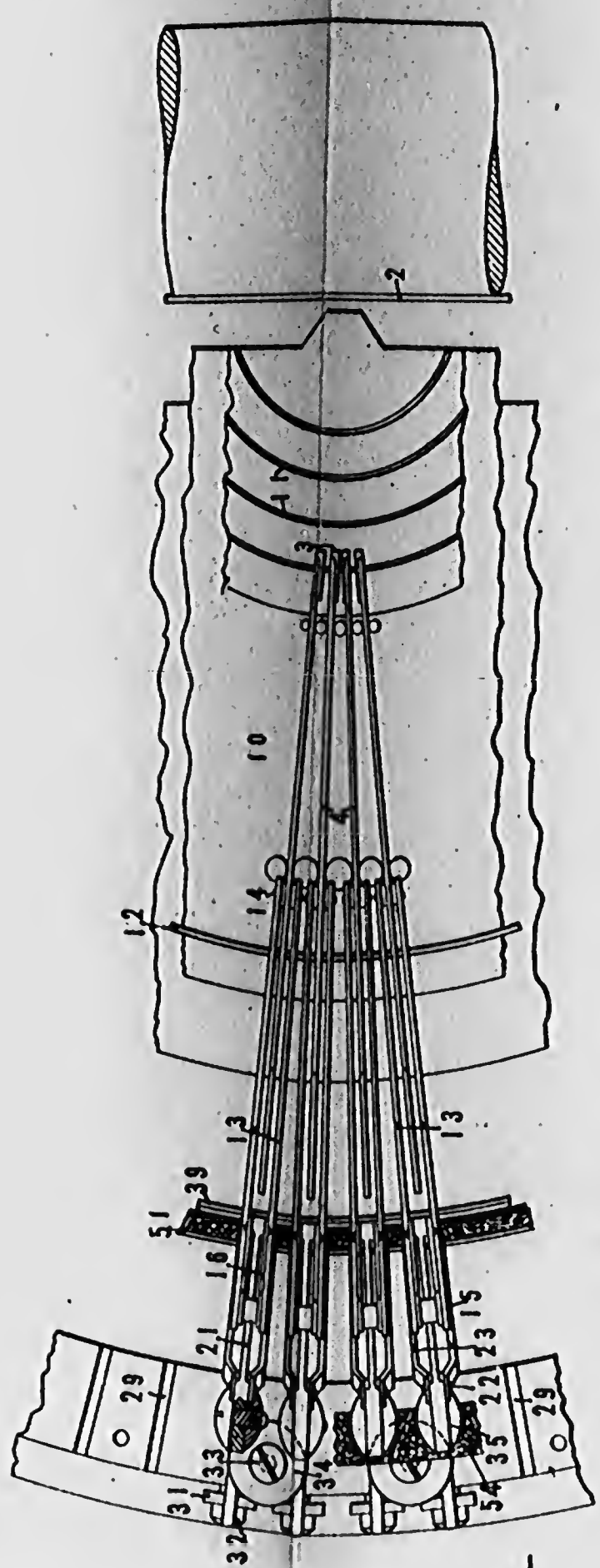

FIG. 4.

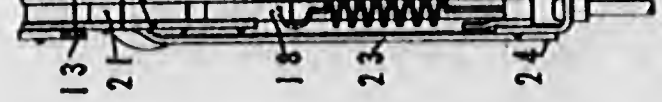

FIG. 5.

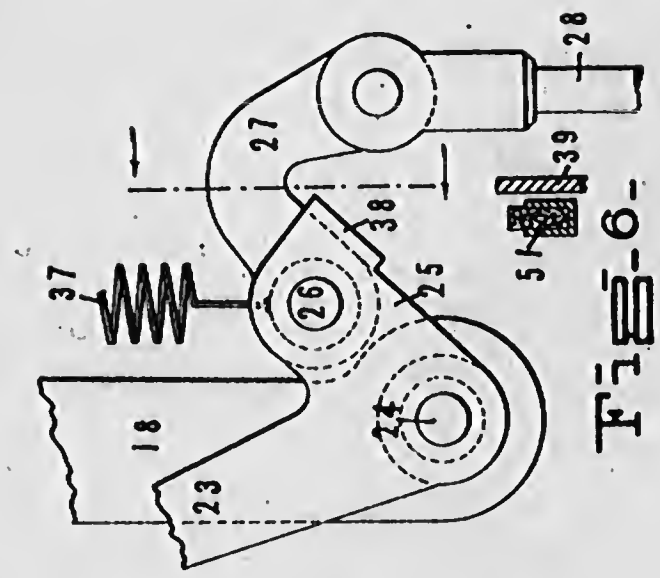

FIG. 6.

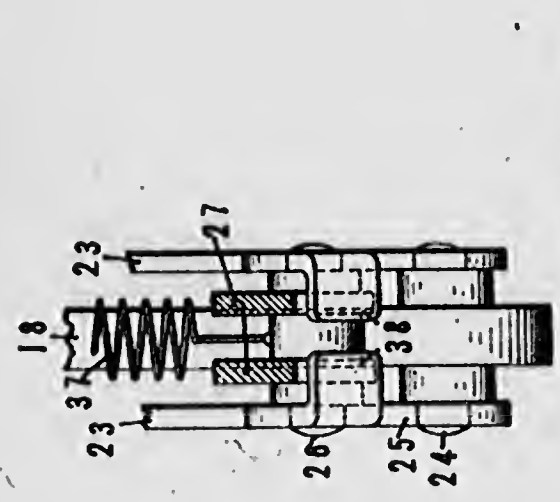

FIG. 7.

WITNESSES
Nordis Terry
T. A. Blair.

INVENTOR
N. H. Anderson
BY
Duell, Lonsfield & Duell
ATTORNEYS

UNITED STATES PATENT OFFICE.

NILS H. ANDERSON, OF MIDDLETOWN, CONNECTICUT, ASSIGNOR TO THE NOISELESS TYPEWRITER COMPANY, OF MIDDLETOWN, CONNECTICUT, A CORPORATION OF CONNECTICUT.

TYPE-WRITING MACHINE.

1,261,751. Specification of Letters Patent. Patented Apr. 9, 1918.

Application filed May 27, 1912. Serial No. 699,867.

To all whom it may concern:

Be it known that I, NILS H. ANDERSON, a citizen of the United States, residing at Middletown, in the county of Middlesex and State of Connecticut, have invented certain new and useful Improvements in Type-Writing Machines, of which the following is a full, clear, and exact description, such as will enable others skilled in the art to which it appertains to make and use the same.

This invention relates to typewriting machines, and with regard to certain more dominant features thereof, to type actions therefor.

One of the objects of the present invention is to provide a type action which will be simple and practical in construction, and durable and efficient in action. Another object is to provide a type action of the above character which will be peculiarly applicable to silently operating machines. Another object is to provide practical means for so mounting the parts as to enhance their ease of movement and reduce wear. Other objects will be in part obvious and in part pointed out hereinafter.

The invention accordingly consists in the features of construction, combinations of elements and arrangement of parts which will be exemplified in the construction hereinafter set forth, and the scope of the application of which will be indicated in the following claims.

In the accompanying drawings, wherein is shown one of various possible embodiments of this invention,

Figure 1 is a side elevation of a complete type action in normal position and such other parts of the machine as are necessary to show an application of the present invention.

Figs. 2 and 3 are similar views of the same type action in different positions.

Fig. 4 is a plan view showing a plurality of type actions in their radially disposed relation to the printing point.

Fig. 5 is a sectional end view of one of the parts of the type actuating mechanism.

Figs. 6 and 7 are enlarged views taken at right angles to each other of certain details.

Similar reference characters refer to similar parts throughout the different views of the drawings.

Referring now in detail to the accompanying drawings and more particularly to Fig. 1, which shows such parts of a complete typewriting machine as are necessary to obtain a clear understanding of the present invention, there is indicated at 1 a cylindrical platen roller which is adapted to be mounted in a longitudinally reciprocating platen carriage, not herein shown. Adjacent the front face of the platen roller is preferably positioned a flat metallic platen 2, with which type 3 on reciprocating type carriers 4 coact. Mounted fore and aft of the machine and in the lower part thereof are a plurality of key levers 5, only one of which is herein shown. The key levers are pivoted at their rear ends upon a fulcrum bar 6 and held upward thereagainst by return springs 7 adjustably mounted in a suitable support 8 in the frame of the machine. The type carrier is actuated from the key-lever 7 through the instrumentality of devices hereinafter more specifically described, although it may here be stated that intermediate each type carrier and its key lever is a system of linkage, adapted to move the type carrier to perform its functions by pressure in contradistinction to impact, thereby to effect the printing operation in a silent and noiseless manner.

The type carriers 4 are radially disposed with relation to the printing point, as shown more clearly in Fig. 4, and are mounted to slide back and forth between upper and lower guide plates 9 and 10, respectively. The lower guide plate 10 is provided, at its rearward part, with a plurality of concentrically disposed grooves 11 to collect any particles which may fall thereon when making erasures, and prevent the same from interfering with the free back and forth movement of the type carriers. These grooves also lessen the area of contact between the adjacent surfaces and thereby render the movement of the type carrier easier.

The forward part or heel of the type carrier rests upon a wire 12 which is embedded in a groove in the guide plate 10, as clearly shown in Fig. 1. This wire holds the heel of the type carrier slightly above the surface of the guide plate and thereby reduces the friction and wear on the moving parts.

The plate containing the grooves 11 is preferably made of a nickel alloy instead of steel, as the latter, under certain conditions, sweats and rusts, leaving a very thin film upon its upper surface which tends to

417

cause the type carriers to stick or move sluggishly when actuated.

Recurring to the devices between the type carrier and the key lever for actuating the former, a pair of links 13, preferably stamped from sheet metal, are pivoted at 14 to the opposite sides of each type carrier. The opposite ends of these links are pivotally connected at 15 with a second pair of links 16, which in turn are pivotally connected at their opposite ends 17 to the opposite sides of a relatively fixed block 18 mounted on the frame of the machine. The links 13 and 16 together constitute a toggle which positively limits the throw of the type carrier in its movement toward the printing plane, or platen.

The links 16 are provided, near their central part, with offset lugs 19, between the ends 20 of which is pivotally connected a single link 21. The opposite end of this link is in turn pivotally connected, at 22, between the longer arms 23 of a pair of elements such as bell crank levers which are fulcrumed at 24 on the opposite sides of the block 18. The shorter arms 25 of the bell crank lever have pivotally connected therewith, at 26, a pair of curved elements or links 27, the opposite ends of which are directly connected with a pull wire 28 attached to the key lever 5.

All of these links are preferably made from stamped sheet metal and are with the exception of link 21 arranged in pairs, as shown more clearly in Fig. 5. This arrangement not only increases the strength of the mechanism to withstand the powerful pressure exerted on the paper, but also provides a more even movement free from binding at their points of pivotal connection. To avoid confusion, these pairs of links will be considered as being single elements. It is thus seen that on depressing the key levers the pull wire 28 and the link 27 connected therewith will cause the bell crank lever to swing about its pivot 24 toward the position shown in Fig. 2. The movement of the bell crank lever will, through the connecting link 21, tend to straighten the toggle formed by the links 16 and 13, thereby moving the type carrier toward the printing position.

As the limited movement of the type carrier 4 on printing actuation of the key-lever is positively controlled by the straightening of the toggle formed by the links 13 and 16, the strength of impression may be accurately adjusted by moving the point 17, at which the link 16 is pivoted, toward and from the printing point, or plane. This may be conveniently done by mounting the block 18 in a radially disposed groove 29 (see Fig. 4) on the front wall of the machine. The forward part of the block is provided with a notch 30 engaged by a collar 31 on a threaded adjusting screw 32 engaging a threaded opening in the frame. It will thus be seen that as the screw 32 is rotated, the block 18 will be moved back or forth relatively to the printing point. In order to hold the block 18 in adjusted position, a set-screw 33 engages a tapped out hole between each adjacent pair of type actions, and is provided with a relatively large washer 34 adapted to engage the upper surface of the blocks 18, as clearly shown in Fig. 4.

As noiseless or silently operating machines perform the printing operation by pressure in contradistinction to impact, the time actually used in making the impression may be longer than that required in impact machines. In order to avoid a tendency to blur during the actual printing operation and for other reasons, it is desirable to provide, in the type action, preferably in the intermediate mechanism between the type carrier and the key lever, means which will accelerate the actual printing operation and withdraw the type from the surface of the paper, or printing plane before the escapement has time to permit movement of the carriage.

In order to accomplish this result and gain other advantages there is provided a weighted member 35, the same being preferably comprised in or mounted on a link 21, and slightly offset with relation to the knuckle of the toggle formed by link 21 and arm 23. The weighted member 35 is also slightly offset relative to the longitudinal axis of the link 21. This weight, under the normal operation of the device, as by printing actuation of the key-lever, will acquire a certain momentum, which momentum will operate to carry the weight rearwardly, or toward the printing plane, after the key-lever 5 has been arrested in its downward or printing actuation movement by a stop 36, the latter being positioned to arrest the printing actuation of the key-lever prior to printing impression. Thus after the downward movement of the key-lever is arrested by the stop 36 the momentum of the weight is expended to force the type carrier toward the printing plane from a point adjacent said plane, and thus also the toggle formed by the links 13 and 16 will be straightened. Hence it will be seen that the momentum of the weighted member 35 is expended in urging the carrier toward the printing plane for the latter portion of the stroke of the carrier toward said plane, the actual printing being in this manner effected.

According to a well known principle of mechanics, as the links of the toggle assume a straightened position, the relative movement of the ends of the links decreases in speed and the pressure exerted thereby is multiplied; consequently the type carrier

moves forward during the first part of its movement with an increasing speed, and during the last part with a decreasing speed, but with greatly increased pressure.

The momentum accumulator or weight 35, which is directly connected with the actuating mechanism, will swing upward, first into the position shown in Fig. 2, at which point the movement of the key lever is arrested, after which its momentum carries it into the position shown in Fig. 3, in which position the printing is concluded. Thus the momentum of the weight 35 is converted into straight line pressure of the type by the intermediate mechanism. When in final position the link 21 and arms 23 of the bell crank lever are also in a straight line, and in themselves form a second toggle which not only increases the pressure exerted by the type carrier, but also limits the movements of the movable parts.

In order to assist in urging the type carrier away from the printing plane and to completely restore the parts to normal position, there is provided between the pivot point 26 and the upper part of the adjusting block 18 a spiral spring 37 which exerts an upward pull upon the short arm of the bell crank lever. The restoring movement, however, is not entirely confined to the spring 37, for the parts forming the bell crank lever being made of resilient sheet metal possess more or less flexibility. Thus, as the momentum accumulator moves rearward into the position shown in Fig. 3, where it is arrested, there will be a certain rebound, materially aided by a felt stop in member 51, hereinafter described, to carry the toggles out of their straightened position and thus withdraw the type from the surface of the paper. In other words, the key lever may be held down and the type will perform their function and move a sufficient distance away from the platen to eliminate a blurring or second impression, due to a second and opposite rebound, and to permit other type to be moved toward the printing point without affecting the subsequent operation of the machine.

At this point it may be noted that the weight 35 has a certain turning movement about the pivot point 22 as the key lever is depressed. The force thus exerted is very slight at first, but as the action approaches the positions shown in Figs. 2 and 3, there is a very decided tendency for the weight to turn about the pivot 22, thereby assisting in the straightening of the toggles. This force may be increased by lengthening the distance from the center of the weight to the point 22. After the bell crank lever has been brought to rest, there is a reverse force brought into play to break the toggles due in part to the reversal of this condition. There is thus produced in this type of action a real live force due in part to the momentum of the weight 35 which is very different in its action from that of other forms of type actions.

The actuating mechanism between the key-lever and the type carrier is so constructed as to permit movement of the momentum device independently of the key-lever after the latter reaches its limit of downward movement. This is accomplished by permitting relative motion between power transmitting portions of said actuating mechanism, and in the present embodiment by providing a pair of bent-in ears or power transmitting portions 38 on the ends of the two parts constituting the bell crank lever, which ears respectively engage a certain, or power transmitting portion, of the two parts forming the curved link 27, thereby providing a loose connection, or lost motion device, in said actuating mechanism, the power transmitting portions or ears 38 being movable into and out of engagement with the power transmitting portions of the link 27. The spring 37 assists in moving said portions into engagement. Thus, as the bell crank lever is actuated on depression of the key lever and is subsequently acted upon by the momentum accumulator, the ears 38 will then move out of engagement with the under side of the link 27. In this manner the key lever may be held down to its limit of movement and the type carrier will complete its path of travel to effect the printing free from the direct impulse of the key-lever and will move out of engagement with the platen, regardless of whether or not the key lever is released, thus relieving the key lever of work during the pressure printing operation.

This loose connection, in the present embodiment, does not involve a disconnection of the parts, and consequently does not interfere with the rapid repetition of any single character or require a complete return of the key lever to normal position under such conditions of operation.

In order that the universal bar mechanism which controls the escapement mechanism, not herein shown, will be unaffected in its cycle of operation by the length of time during which the key lever may be inadvertently held in downward position, it is desirable to place the universal bar, indicated at 39, in operative relation to the intermediate mechanism between the key lever and the type action. This universal bar, which is in the form of an arc concentric to the type carriers, extends from one side of the machine to the other and in the path of travel of the ears 38 on the bell crank lever and at a sufficient distance therebelow to be actuated only during the movement of the bell crank lever from the position shown in Fig. 2 to that shown in Fig. 3, or while the

OSA
419

momentum accumulator is acting independently of the operation of the key lever, and the power transmitting portions of the link 27 and the ears 38 are moving from each other.

This universal bar 39 is supported upon two upright members 40 at opposite sides of the center of the machine, only one of which is herein shown, due to the sectional view. These members 40 are pivotally connected with horizontally disposed links 41 and 42 pivoted at 43 and 44, respectively, on depending brackets 45. This parallelogram construction provides a vertical movement for the members 40 and consequently an equal vertical movement of all of the portions of the universal bar 39 mounted thereon. If the links 41 alone were used they would have a simple pivotal movement about their point of support, so that the forward end of the universal bar would travel through a greater arc than the rear end.

Secured to the front part of the universal bar is a forwardly projecting member 46 adapted to engage upper and lower stops 47 and 48, respectively. These stops are adjustably mounted on a depending bracket 49 secured, by means of a screw 50, to the front wall of the frame of the machine to limit the up and down movement of the bar.

Concentrically disposed with relation to the universal bar is mounted a stop member 51 provided with a felt cushion. This stop is supported from the frame of the machine in any desired manner, and is adapted to take up the shock exerted by the momentum accumulator in its rearward movement. The stop also prevents overthrow of the toggles and allows for the resiliency of the bell crank lever to return the parts to normal position with the aid of the spring 37. It will be seen from Fig. 6 that as the bell crank lever swings rearward, the ears 38 will coact with the universal bar and actuate the same before being brought to rest by the fixed stop. In this manner a much lighter and more delicately acting universal bar mechanism may be employed than would otherwise be required to withstand the strains exerted by the intermediate mechanism of the type action.

Members 52 and 53 are parts of and connected with the line lock mechanism and escapement mechanism, respectively. These mechanisms form no part of the present invention, except in so far as they may enter into certain combinations, and therefore it is believed to be unnecessary to show the same or go into a detailed description of their operation. It is sufficient to state that the member 52 has an oscillating movement with each actuation of the universal bar and may coact with a stop to prevent this oscillation, when the stop is moved into the path of oscillation as the carriage reaches a predetermined point. As to the member 53, this is connected with the rocker member or other actuating part of the escapement mechanism in any desired manner.

The operation of this device is substantially as follows:—When the key lever 5 is depressed, the pull wire 28 will have a downward movement which in turn will cause the curved link 27 to move in the same direction. Due to the formation of the end of the bell crank lever as shown more clearly in Figs. 6 and 7, this downward movement will cause the bell crank to swing about its pivot point 24, thereby tensioning the spring 37 and causing the upper part of the bell crank lever to swing rearward toward the platen.

This rearward movement at first exerts a straight horizontal thrust on the link 21 which is connected at its opposite end with the lug 19 on the link 16 of the toggle between the adjusting block 18 and the type carrier. As the downward movement of the key lever continues, the mechanism assumes the position shown in Fig. 2, the link 21 instead of being thrust rearward is then being thrust downward, thereby to straighten the toggle formed by the links 13 and 16, at the same time straightening the toggle formed by the links 21 and 23. While these toggles are being straightened it is, of course, to be understood that the weight 35, carried by the link 21 and off-set with relation to the longitudinal axis thereof, is being swung upward and rearward, having a compound movement about the pivot point 24 and also the floating pivot point 20.

The momentum acquired by the movement of the weight in this manner constantly increases, for it will be noted that the effective radius, that is, the distance between the center of the weight and the pivot point 24, is constantly increasing. This increase of effective radius will cause an increase in the momentum which varies directly as the square of the effective radius. Thus the momentum accumulator takes up the energy applied to the key lever in operation and subsequently delivers the energy to the type carrier to perform its printing function after the movement of the key lever has been arrested by the stop 36.

Not only is the momentum increased due to the increase of the effective radius of the momentum accumulator, but it is also multiplied by the toggle arrangement of linkage. While the degree of impression is regulated to a certain extent according to the length of throw of the type carrier by the adjustment of the block 18, the striking of a key lever with a greater force, as when making a plurality of carbon copies, will be multiplied to some extent in an action of this kind, for the momentum of the momentum accumulator will increase according to the speed or force with which the key is struck,

As the momentum accumulator is free to continue its rearward movement after the key lever has been arrested in its downward movement, due to the loose connection between the bell crank lever and the link 27, it will swing rearward to the position shown in Fig. 3, thus straightening both sets of toggles and effecting the printing in a rapid and noiseless manner and with great pressure.

Its rearward movement will be stopped by two means, the coaction of the type with the platen and the coaction of the bent-in ears 38 with the stop member 51 mounted on the frame of the machine.

Immediately after being arrested, the resiliency of the arms 23 and the stop bar cushion will cause a slight rebound sufficient to break the toggles and thus carry the type out of contact with the paper. If the key lever is released immediately after being struck, as occurs in the normal operation of the machine, the spring 37 will return the parts to normal position.

A pad 54 mounted on the front wall of the machine will cushion the return movement of the momentum accumulator 35, thus noiselessly arresting the movement of the movable parts.

It is during the last part of the movement of the type action that the universal bar is actuated, that is, when the parts are moving from the position shown in Fig. 2 to that shown in Fig. 3. By reference to Fig. 6, it will be noted that the bent-in ears 38 contact with the universal bar 39 and press the same downward until arrested by the stop 51. As the ears 38 are raised out of contact with the stop 51 independently of the release of the key lever the universal bar is permitted to return to normal position, thus completing its cycle of operation whereby the escapement mechanism connected therewith through the link 53 may really be said to operate to space the carriage during the depression of the key lever, that is, while the key-lever is at the limit of its printing stroke, for it is quite clear that even if one key lever is held down, other key levers may be operated indefinitely.

Thus the means for actuating the escapement is operable independently of the return movement of the key-lever.

It is thus seen that this invention provides a simple and practical type action adapted to effect the printing operation in a rapid and noiseless manner, and accomplishes, among others, all of the objects and advantages above set forth.

As many changes could be made in the above construction and many apparently widely different embodiments of this invention could be made without departing from the scope thereof, it is intended that all matter contained in the above description or shown in the accompanying drawings shall be interpreted as illustrative and not in a limiting sense.

It is also to be understood that the language used in the following claims is intended to cover all of the generic and specific features of the invention herein described and all statements of the scope of the invention, which, as a matter of language, might be said to fall therebetween.

Having described my invention, what I claim as new and desire to secure by Letters Patent is:

1. In a typewriting machine, in combination, a platen, a type carrier to coact therewith, a key-lever for actuating the type carrier, and mechanism between the key-lever and the type carrier, including a momentum device acting through a pressure multiplying device positively limiting the range of movement of said type carrier.

2. In a typewriting machine, in combination, a platen, a reciprocating type carrier to coact therewith, a key-lever for actuating the type carrier, and mechanism between the key-lever and the type carrier, including a pivotally mounted momentum accumulator the momentum of which is converted into straight line pressure on the type carrier.

3. In a typewriting machine, in combination, a key-lever, a type carrier to be actuated thereby, means connected to a stationary point and to said carrier to positively limit the extent of the printing stroke of said carrier, and a weight operatively connected to said carrier.

4. In a typewriting machine, in combination, a key-lever, a type carrier to be actuated thereby, a platen, means to positively limit the extent of the printing stroke of said carrier independently of said platen, and a weight operatively connected to said carrier.

5. In a typewriting machine, in combination, a platen, a type carrier coacting therewith, a key-lever for actuating said type carrier, and intermediate mechanism adapted to limit the movement of said type carrier independently of said platen so positioned and arranged as to move said type carrier by pressure exerted by said mechanism through the major part of its path of travel and through the remaining part by the momentum acquired by the movement of said mechanism.

6. In a typewriting machine, in combination, a platen, a type carrier having a predetermined throw independently of the platen, a key-lever therefor having a limited path of travel, and means actuated by the key-lever to move the carrier to the limit of throw after the movement of the key-lever has been arrested.

7. In a typewriting machine, in combina-

tion, a platen, a type carrier having a predetermined throw independently of the platen, a key-lever therefor, and intermediate mechanism to take up the energy expended on the key-lever when operated and deliver it to the type-carrier after the movement of the key-lever has been arrested to move the carrier to its limit of throw.

8. In a typewriting machine, in combination, a type carrier, a finger-actuated member therefor, a toggle therebetween adapted to be partially straightened to move the carrier toward its printing position by the action of said member, and means for completing the movement of the carrier independently of the movement of the key-lever.

9. In a typewriting machine, in combination, a type carrier, a key-lever therefor having a limited path of travel, a toggle interposed between said parts adapted to be partially straightened to move the carrier toward its printing position by the action of said lever, and a loose connection between said toggle and the key-lever, whereby the toggle may continue its movement independently of the movement of the key-lever.

10. In a typewriting machine, in combination, a type carrier, a key-lever therefor, toggle mechanism interposed therebetween adapted to limit the movement of the type carriers toward the platen, a loose connection between the toggle and one of the parts, whereby the toggle may move to and from its straightened position independently of the movement of the part to which it is loosely connected.

11. In a typewriting machine, in combination, a type carrier, a key-lever for actuating said type carrier, mechanism therebetween including a weight adapted to move upwardly and then downwardly when the key-lever is actuated to cause said type carrier to engage the paper.

12. In a typewriting machine, in combination, a type carrier having a limited path of travel, a key-lever therefor, intervening mechanism adapted to limit the path of travel of the type carrier, means for arresting the movement of said key lever before the type carrier reaches the end of its path of travel, and a momentum accumulator associated with the intermediate mechanism for causing said type carrier to engage the paper, one of the parts of the intermediate mechanism being of resilient material to cause the momentum accumulator to rebound to carry the type from the paper.

13. In a typewriting machine, in combination, a type carrier, a key-lever therefor having a limited path of travel, toggle mechanism interposed between said parts for transmitting motion from one to the other, a momentum accumulator associated with said toggle mechanism adapted to move the type carrier through the last part of its path of travel by its momentum independently of the movement of the key-lever, and resilient means associated with said mechanism for withdrawing the type carrier from the printing point prior to the return movement of the key-lever.

14. In a typewriting machine, in combination, a type carrier having a limited path of travel to a normal printing plane, a key-lever therefor, means for arresting its downward movement, a toggle, one end of which is connected with said type carrier, a momentum accumulator associated with said toggle adapted to straighten the toggle after the key-lever has been arrested, and resilient means associated with said toggle for withdrawing the type carrier away from the printing plane before the return movement of the key-lever.

15. In a typewriting machine, in combination, a type carrier having a limited path of travel to a normal printing plane, a key-lever having a limited path of travel for actuating said type carrier, intermediate mechanism comprising a plurality of toggles for giving a predetermined rate of travel to said type carrier, and means for straightening said toggles to effect the printing after the key-lever has been arrested in its downward movement.

16. In a typewriting machine, in combination, a type carrier having a limited path of travel to a normal printing plane, a key-lever having a limited path of travel for actuating said type carrier, intermediate mechanism comprising a plurality of toggles for giving a predetermined rate of travel to said type carrier, means for straightening said toggles to effect the printing after the key-lever has been arrested in its downward movement, and spring means for returning the parts to normal position.

17. In a typewriting machine, in combination, a type carrier having a limited path of travel to a normal printing plane, a key-lever having a limited path of travel for actuating said type carrier, intermediate mechanism comprising a plurality of toggles for transmitting motion from one to the other, means for straightening said toggles to effect the printing after the key-lever has been arrested in its downward movement, and a plurality of separately acting means for returning the parts to normal position.

18. In a typewriting machine, in combination, a type carrier having a limited path of travel to a normal printing plane, a key-lever having a limited path of travel for actuating said type carrier, intermediate connecting mechanism comprising a plurality of toggles, means for straightening said toggles to effect the printing after the key-

lever has been arrested in its downward movement, spring means for returning the parts to normal position, and a loose connection between the toggles and the key-lever, whereby they move independently of said key lever.

19. In a typewriting machine, in combination, a type carrier, a key-lever having a limited path of travel for actuating said type carrier, intermediate connecting mechanism comprising a plurality of toggles, means for straightening one of said toggles to effect the printing after the key-lever has been arrested in its downward movement, spring means for returning the parts to normal position, and a universal bar adapted to be actuated by one of said parts.

20. In a typewriting machine, in combination, a type carrier, a key-lever for actuating said type carrier, a stop for arresting its downward movement, a return spring for said key-lever, toggle mechanism interposed between the key-lever and the type carrier for transmitting motion from one to the other, and a loose connection between said toggle mechanism and one of said first mentioned parts, whereby the toggle may be moved to and from straightened position independently of the movement of the key-lever.

21. In a typewriting machine, in combination, a type carrier, a key-lever for actuating said type carrier, a stop for arresting its downward movement, a return spring for said key-lever, a toggle interposed between the key-lever and the type carrier for transmitting motion from one to the other, a loose connection between said toggle mechanism and said key-lever, whereby the toggle may be moved to and from straightened position independently of the movement of the key-lever, and a momentum accumulator associated with the toggle for moving the toggle to straightened position independently of the movement of the key-lever.

22. In a typewriting machine, in combination, a type carrier having a limited path of travel to a normal printing plane, a key-lever for actuating said type carrier, means for arresting its downward movement, a return spring for said key-lever, toggle mechanism interposed between the key-lever and the type carrier for transmitting motion from one to the other, a loose connection between said toggle mechanism and one of said first mentioned parts, whereby the toggle may be moved to and from straightened position independently of the movement of the key-lever, a momentum accumulator associated with the toggle of said mechanism for moving the toggle to straightened position independently of the movement of the key-lever, and resilient means for withdrawing the type carrier from its printing position independently of the return movement of the key-lever.

23. In a typewriting machine, in combination, a type carrier, a key-lever for actuating said type carrier, a stop for arresting its downward movement, a return spring for said key-lever, toggle mechanism interposed between the key-lever and the type carrier for transmitting motion from one to the other, a loose connection between said toggle mechanism and said key-lever, whereby the toggle may be moved to and from straightened position independently of the movement of the key-lever, a momentum accumulator associated with the toggle of said mechanism for moving the toggle to straightened position independently of the movement of the key-lever, and a universal bar adapted to be actuated by said toggle mechanism.

24. In a typewriting machine, in combination, a type carrier having a limited path of travel to a normal printing plane, a key-lever for actuating said type carrier, and mechanism interposed between said parts for transmitting motion from one to the other including a plurality of toggles, one of which is secured to the type carrier at one end and to a relatively fixed part of the machine at the other end, the other toggle being directly connected with one of said links of the first mentioned toggle and adapted to straighten the same as it assumes straightened position itself.

25. In a typewriting machine, in combination, a type carrier, a key-lever for actuating said type carrier, a stop for arresting the downward movement of the key-lever, mechanism interposed between said key lever and carrier for transmitting motion from one to the other including a plurality of toggles, one of which is secured to the type carrier at the one end and to a relatively fixed part of the machine at the other end, the other toggle being connected with one of said links of the first mentioned toggle and adapted to straighten the same as it assumes straightened position itself after the key-lever has been arrested.

26. In a typewriting machine, in combination, a type carrier, a key-lever for actuating said type carrier, a stop for arresting the downward movement of the key-lever, mechanism interposed between said key lever and carrier for transmitting motion from one to the other including a plurality of toggles, one of which is secured to the type carrier at the one end and to a relatively fixed part of the machine at the other end, the other toggle being connected with one of said links of the first mentioned toggle and adapted to straighten the same as it assumes straightened position itself after the key-lever has been arrested, and a momentum accumulator

directly connected with one of said toggles for moving both of the toggles to straightened position.

27. In a typewriting machine, in combination, a type carrier having a limited path of travel to a normal printing plane, a key-lever for actuating said type carrier, a stop for arresting the downward movement of the key-lever, mechanism interposed between said parts for transmitting motion from one to the other including a plurality of toggles, one of which is directly connected with one of the links of the other toggle and adapted to straighten said toggle as it assumes straightened position itself, a momentum accumulator directly connected with one of said toggles for moving both of the toggles to straightened position after the key-lever has been arrested, and a loose connection between one of said toggles and said key-lever whereby an independent movement is permitted.

28. In a typewriting machine, in combination, a type carrier, a key-lever for actuating said type carrier, a stop for arresting the downward movement of the key-lever, mechanism interposed between said parts for transmitting motion from one to the other including a plurality of toggles, a momentum accumulator directly connected with one of said toggles for moving both of the toggles to straightened position after the key-lever has been arrested, and a universal bar adapted to be actuated by one of said parts.

29. In a typewriting machine, in combination, a type carrier adapted to move to a normal printing plane, a key-lever for actuating said type carrier, a stop for limiting the downward movement of the key-lever, intermediate mechanism for transmitting the momentum of the key-lever to the type carrier including a toggle between the type carrier and a fixed portion of the machine, and a second toggle including a bell-crank lever, one arm of which is connected with said key-lever, whereby as the key-lever is depressed said toggle will tend to assume a straightened position.

30. In a typewriting machine, in combination, a type carrier adapted to move to a normal printing plane, a key-lever for actuating said type carrier, a stop for limiting the downward movement of the key-lever, intermediate mechanism for transmitting the movement of the key-lever to the type carrier, including a toggle between the type carrier and a fixed portion of the machine and a second toggle connected with the first toggle and another portion of the machine, said second toggle including a bell-crank lever, one arm of which is connected with said key-lever, whereby as the key-lever is depressed said toggle will tend to assume a straightened position, and means associated with one of said toggles adapted to complete their movement to straightened position after the downward movement of the key-lever has been arrested.

31. In a typewriting machine, in combination, a type carrier adapted to move to a normal printing plane, a key-lever for actuating said type carrier, a stop for limiting the downward movement of the key-lever, intermediate mechanism for transmitting the movement of the key-lever to the type carrier, including two connected toggles, one toggle including a bell-crank lever, one arm of which is connected with said key-lever, whereby as the key-lever is depressed said toggles will tend to assume a straightened position, means associated with one of said toggles adapted to complete their movement to straightened position after the downward movement of the key-lever has been arrested, and a universal bar adapted to be actuated by one of said parts.

32. In a typewriting machine, in combination, a type carrier adapted to move to a normal printing plane, a key-lever for actuating said type carrier, a stop for limiting the downward movement of the key-lever, intermediate mechanism for transmitting the movement of the key-lever to the type carrier, including a toggle between the type carrier and a fixed portion of the machine and a second toggle connected therewith, said second toggle including a bell-crank lever, one arm of which is connected with said key-lever, whereby as the key-lever is depressed said toggle will tend to assume a straightened position, means associated with one of said toggles adapted to complete its movement to straightened position after the downward movement of the key-lever has been arrested, and a universal bar adapted to be actuated by one of the parts of one of said toggles only after said key-lever has been arrested.

33. In a typewriting machine, in combination, a type carrier adapted to move to a normal printing plane, a key-lever for actuating said type carrier, a stop for limiting the downward movement of the key-lever, intermediate mechanism for transmitting the movement of the key-lever to the type carrier, including a toggle between the type carrier and a fixed portion of the machine and a second toggle connected with the first toggle and another portion of the machine, said second toggle including a bell-crank lever, one arm of which is connected with said key-lever, whereby as the key-lever is depressed said toggle will tend to assume a straightened position, means associated with one of said toggles adapted to complete their movement to straightened position after the downward movement of the key-

lever has been arrested, a universal bar adapted to be actuated by one of the parts of one of said toggles, and a loose connection in said mechanism permitting said toggle to straighten and actuate the universal bar and return to flexed position independently of the movement of the key-lever.

34. In a typewriting machine, in combination, a type carrier, a key-lever for actuating said type carrier, means for arresting the downward movement of the key-lever, intermediate mechanism between the key-lever and the type carrier for transmitting motion from one to the other, said mechanism including a bell-crank lever, one arm of which is loosely connected with the key-lever, whereby they may move independently of each other, and a weight associated with the other part of said bell-crank lever adapted to accomplish an independent movement thereof to force the type carrier to printing position independently of the movement of the key-lever.

35. In a typewriting machine, in combination, a type carrier adapted to move to a normal printing plane, a key-lever for actuating said type carrier, means for arresting the downward movement of the key-lever, intermediate mechanism between the key-lever and the type carrier for transmitting motion from one to the other, said mechanism including a bell-crank lever, one arm of which is loosely connected with the key-lever, whereby they may move independently of each other, a weight associated with the other part of said bell-crank lever adapted to accomplish an independent movement thereof to force the type carrier to printing position independently of the movement of the key-lever, said last mentioned arm of said bell-crank lever being of resilient material, whereby the weight is permitted to rebound to withdraw the type carrier from the normal printing plane.

36. In a typewriting machine, in combination, a plurality of straight-thrust type carriers radially disposed with respect to the printing point, and a plate along which said type carriers are adapted to move, one of said parts having recesses transversely of the path of said carrier for reducing the contacting area between the adjacent surfaces of said plate and carriers.

37. In a typewriting machine, in combination, a plurality of straight-thrust type carriers radially disposed with respect to the printing point, a plate along which said type carriers are adapted to move, and means associated with one of said parts for reducing the contacting area between the adjacent surfaces of said plate and carriers, said means including a round member concentrically disposed with relation to the ends of the carriers along which the edges of the carriers are adapted to slide in their back and forth movement.

38. In a typewriting machine, in combination, a plurality of straight-thrust type carriers radially disposed with respect to the printing point, a plate along which said type carriers are adapted to move, and means associated with one of said parts for reducing the contacting area between the adjacent surfaces of said plate and carriers, said means including a round member concentrically disposed with relation to the ends of the carriers along which the edges of the carriers are adapted to slide in their back and forth movement, said plate having a plurality of concentric grooves adapted to catch dust and dirt collecting on said plate as well as to reduce the area of contact between the edges of the type carriers and the plate.

39. In a typewriting machine, in combination, a plurality of straight-thrust type carriers radially arranged with respect to a common printing point, a plate along which said type carriers are adapted to slide, said plate having a plurality of grooves therein for reducing the area of contact between the type carriers and the said plate.

40. In a typewriting machine, in combination, a plurality of radially disposed straight-thrust type carriers, a key-lever for each type carrier, independent mechanisms for transmitting motion from each key-lever to its type carrier, each including a toggle, one end of which is connected with a type carrier and the other end to an adjustably mounted part of the machine, a second toggle, one end of which is connected with said first toggle and the other end with said adjustable part, one link of said second toggle being in the form of a bell-crank lever and made of resilient material, connections between one arm of the bell-crank lever and the key-lever, and a weight operatively associated with the other end of said bell-crank lever adapted to move the toggles to straightened position due to the momentum acquired on moving the key-lever, said resilient arm adapted to aid in returning the parts to normal position, thereby withdrawing the type carrier from its printing position independently of the movement of the key-lever.

41. In a typewriting machine, in combination, a plurality of radially disposed straight-thrust type carriers, a key-lever for each type carrier, independent mechanisms for transmitting motion from each key-lever to its type-carrier, each including a toggle, one end of which is connected with a type carrier and the other end to an adjustably mounted part of the machine, a second toggle, one end of which is connected with said first toggle and the other end with said ad-

justable part, one link of said second toggle being in the form of a bell-crank lever and made of resilient material, connections between one arm of the bell crank lever and the key-lever, a weight operatively associated with the other end of said bell-crank lever adapted to move the toggles to straightened position due to the momentum acquired on moving the key-lever, said resilient arm adapted to aid in returning the parts to normal position, thereby withdrawing the type carrier from its printing position independently of the movement of the key-lever, and a connection between said bell-crank lever and the key-lever providing a lost motion device to permit the partial return movement of the type carriers.

42. In a typewriting machine, in combination, a plurality of radially disposed straight-thrust type carriers, a key-lever for each type carrier, independent mechanisms for transmitting motion from each key-lever to its type-carrier, each including a toggle, one end of which is connected with a type carrier and the other end to an adjustably mounted part of the machine, a second toggle, one end of which is connected with said first toggle and the other end with said adjustable part, one link of said second toggle being in the form of a bell-crank lever and made of resilient material, connections between one arm of the bell-crank lever and the key-lever, a weight operatively associated with the other end of said bell-crank lever adapted to move the toggles to straightened position due to the momentum acquired on moving the key-lever, said resilient arm adapted to aid in returning the weight to normal position, thereby withdrawing the type carrier from its printing position independently of the movement of the key-lever, a connection between said bell-crank lever and the key-lever providing a lost motion device to permit the partial return movement of the type carriers, and a universal bar adapted to be actuated by one of the arms of said bell-crank lever.

43. In a typewriting machine, in combination, a plurality of radially disposed straight-thrust type carriers, a key-lever for each type carrier, independent mechanisms for transmitting motion from each key-lever to its type-carrier, each including a toggle, one end of which is connected with a type carrier and the other end to an adjustably mounted part of the machine, a second toggle, one end of which is connected with said first toggle and the other end with said adjustable part, one link of said second toggle being in the form of a bell-crank lever and made of resilient material, connections between one arm of the bell-crank lever and the key-lever, means operatively associated with the other end of said bell-crank lever adapted to move the toggles to straightened position due to the momentum acquired for moving the key-lever, said resilient arm adapted to aid in returning said means to normal position, thereby withdrawing the type carrier from its printing position independently of the movement of the key-lever, a connection between said bell-crank lever and the key-lever providing a lost motion device to permit the partial return movement of the type carriers, and a universal bar adapted to be actuated by one of the parts of one of said toggles.

44. In a front strike typewriting machine, in combination, a type carrier, a key lever, operative connecting means therebetween, a universal bar positioned in and near the end of the path of travel of a part associated with said means, a stop for arresting the actuating movement of said key lever prior to the printing movement of said type carrier, and means utilizing only the force expended on said key lever prior to arrest of the latter for effecting printing by said type carrier thereafter and actuation of said universal bar, said universal bar being adapted for connection with an escapement mechanism.

45. In a front strike typewriting machine, in combination, a plurality of radially disposed type carriers, key levers, operative connecting means therebetween, a universal bar positioned in and near the path of travel of a part associated with said means, a stop for arresting the actuating movement of said key levers prior to the printing movement, and means utilizing only the force expended on said key levers prior to arrest of the latter for effecting printing by said type carrier thereafter and actuation of said universal bar, said universal bar being adapted for connection with an escapement mechanism.

46. In a front strike typewriting machine, in combination, a plurality of radially disposed rear moving type carriers, key levers, intermediate operative connection between said key levers and said type carriers, a U-shaped universal bar positioned in and near the path of travel of a part of said connections above said key levers, means for arresting the actuating movement of said key levers prior to the printing movement, and means movable by said key levers prior to arrest of the latter for effecting printing by said type carriers thereafter and actuation of said universal bar, said universal bar being adapted for connection with an escapement mechanism.

47. In a typewriting machine, in combination, a plurality of radially disposed horizontally movable type carriers, a member movable with each of said carriers, a universal bar extending transversely across the machine and curved to have a uniform rel-

ative position beneath each member, and a plurality of levers supporting said universal bar and insuring a substantially parallel movement of all parts thereof.

48. In a typewriting machine, in combination, a substantially rigid type carrier, a key-lever, and devices whereby on printing actuation of said key-lever, said type carrier is moved to the printing plane and thereafter assumes position away from the printing plane when the lever is at the limit of its printing stroke, said devices comprising means adapted to positively limit the throw of the carrier toward the printing plane.

49. In a typewriting machine, in combination, a type carrier, a key-lever, and devices whereby on printing actuation of said key-lever, said type carrier is moved to the printing plane and thereafter assumes position away from the printing plane when the key-lever is at the limit of its printing stroke, said devices including a pair of connected toggles one of which is operatively connected to said carrier, said toggles being arranged to move toward straightened position on printing actuation of said key-lever.

50. In a typewriting machine, in combination, a type carrier, a key-lever, and devices whereby on printing actuation of said key-lever, said type carrier is moved to the printing plane and thereafter assumes position away from the printing plane when the key-lever is at the limit of its printing stroke, said devices comprising a pair of connected toggles one of which is operatively connected to said carrier, and a spring connected to urge said carrier away from the printing plane.

51. In a typewriting machine, in combination, a type carrier, a key-lever, and devices whereby on printing actuation of said key-lever, said type carrier is moved to the printing plane and thereafter assumes position away from the printing plane when the key-lever is at the limit of its printing stroke, said devices comprising a pair of connected toggles one of which is operatively connected to said carrier, said toggles being arranged to move toward straightened position on printing actuation of said key-lever, and a spring connected to operate said toggles so as to move said carrier in a direction away from the printing plane.

52. In a typewriting machine, in combination, a type carrier, a key-lever, and devices whereby on printing actuation of said key-lever, said type carrier is moved to the printing plane and thereafter assumes position away from the printing plane when the key-lever is at the limit of its printing stroke, said devices including a pair of connected toggles one of which is operatively connected to said carrier and to the frame, and means adapted to adjust said point of connection to said frame relative to the printing plane.

53. In a typewriting machine, in combination, a type carrier, a key-lever, devices whereby on printing actuation of said key-lever said type carrier is moved to the printing plane, comprising a toggle operatively connected to said carrier, an element operatively connected to said toggle, and an element operatively connected to said key-lever, said two elements comprising power transmitting portions adapted to move toward and from each other, and to move from each other on printing actuation of said key-lever.

54. In a typewriting machine, in combination, a type carrier, a key-lever, devices whereby on printing actuation of said key-lever said type carrier is moved to the printing plane comprising a pair of toggles operatively connected to each other, one of which is operatively connected to said carrier, an element operatively connected to one of said toggles, and an element operatively connected to said key-lever, said two elements comprising power transmitting portions adapted to move toward and from each other, and to move from each other on printing actuation of said key-lever.

55. In a typewriting machine, in combination, a type carrier, a key-lever, and devices whereby on printing actuation of said key-lever said type carrier is moved to the printing plane, comprising means adapted to relieve the type carrier from the direct impulse of said key-lever prior to printing impression and force the type carrier to printing impression while so relieved, said means comprising an element operatively connected to said key-lever and an element operatively connected so said type carrier, said two elements comprising power transmitting portions adapted to move toward and from each other, one of said elements having a weight operatively connected thereto so as to expend momentum to move one of said power transmitting portions from the other power transmitting portion at a predetermined point in the path of movement of said carrier.

56. In a typewriting machine, in combination, a type carrier, a key-lever, devices whereby on printing actuation of said key-lever said type carrier is moved to the printing plane, comprising means adapted to relieve the type carrier from the direct impulse of said key-lever prior to printing impression and force the type carrier to printing impression while so relieved, said means comprising an element operatively connected to said key-lever and an element operatively connected to said type carrier, said two elements comprising power transmit-

427

ting portions adapted to move toward and from each other, one of said elements having a weight operatively connected thereto so as to expend momentum to move one of said power transmitting portions from the other power transmitting portion at a predetermined point in the path of movement of said carrier toward said printing plane.

57. In a typewriting machine, in combination, a type carrier, a key-lever, devices whereby on printing actuation of said key-lever said type carrier is moved to the printing plane, comprising a toggle operatively connected to said type carrier, an element operatively connected to said toggle, and an element operatively connected to said key-lever, said two elements comprising power transmitting portions adapted to move toward and from each other, and to move from each other on printing actuation of said key-lever, one of said elements having a weight operatively connected thereto so as to expend momentum to move one of said power transmitting portions from the other power transmitting portion at a predetermined point in the path of movement of said carrier toward said printing plane.

58. In a typewriting machine, in combination, a type carrier, a key-lever, an escapement operating member, devices whereby on printing actuation of said key-lever said type carrier is moved to the printing plane, comprising an element operatively connected to said type carrier, an element operatively connected to said key-lever, said elements having power transmitting portions adapted to move toward and from each other, and means whereby the movement of said elements from each other causes operation of said escapement operating member.

59. In a typewriting machine, in combination, a type carrier, a key-lever, a universal bar, means adapted to limit the printing stroke of said key-lever, and devices whereby on printing actuation of said key-lever said type carrier is moved to the printing plane, comprising a weight adapted to expend momentum and thereby cause the operation of the universal bar after the printing actuation of said key-lever.

60. In a typewriting machine, in combination, a type carrier, a key-lever, a universal bar, means adapted to limit the printing stroke of said key-lever, and devices whereby on printing actuation of said key-lever said type carrier is moved to the printing plane, comprising a weight adapted to expend momentum and thereby cause the operation of the universal bar after the printing actuation of said key-lever and before the return movement thereof.

61. In a typewriting machine, in combination, a type carrier, a key-lever, a universal bar, means adapted to limit the printing stroke of said key-lever, devices whereby on printing actuation of said key-lever said type carrier is moved to the printing plane, comprising an element operatively connected to said type carrier, an element operatively connected to said key-lever, said elements having power transmitting portions adapted to move toward and from each other, and a weight operatively connected to the element connected to said type carrier adapted to expend momentum and thereby cause the operation of the universal bar after the printing actuation of said key-lever.

62. In a typewriting machine, in combination, a type-carrier, a key-lever, a universal bar, means adapted to limit the printing stroke of said key-lever, devices whereby on printing actuation of said key-lever said type carrier is moved to the printing plane, comprising an element operatively connected to said type carrier, an element operatively connected to said key-lever, said elements having power transmitting portions adapted to move toward and from each other, and a weight operatively connected to the element connected to said type carrier adapted to expend momentum and thereby cause the operation of the universal bar after the printing actuation of said key-lever and before the return movement thereof.

63. In a typewriting machine, in combination, a type carrier, a key-lever, and devices whereby on printing actuation of said key-lever said type carrier is moved to the printing plane and caused to approach said plane from a point closely adjacent thereto with a decreasing velocity and under increasing leverage, comprising means arranged to acquire momentum by said actuation and to expend momentum to urge said type carrier toward said printing plane for a portion of the stroke of said carrier toward said plane.

64. In a typewriting machine, in combination, a type carrier, a key-lever, and devices whereby on printing actuation of said key-lever said type carrier is moved to the printing plane and caused to approach said plane from a point closely adjacent thereto under increasing leverage, comprising means arranged to acquire momentum by said actuation and to expend momentum to urge said type carrier toward said printing plane for a portion of the stroke of said carrier toward said plane.

65. In a typewriting machine, in combination, a type carrier, a key-lever, devices whereby on printing actuation of said key-lever said type carrier is moved to the printing plane, comprising a pair of connected toggles one link of which is operatively connected to said type carrier, and means arranged to acquire momentum by said actu-

ation and to expend momentum to urge said type carrier toward said printing plane for a portion of the stroke of said carrier toward said plane.

66. In a typewriting machine, in combination, a type carrier, a key-lever, devices whereby on printing actuation of said key-lever said type carrier is moved to the printing plane, comprising a toggle one link of which is operatively connected to said type carrier and another to the frame, means adapted to adjust said point of connection to said frame relatively to the printing plane, and means arranged to acquire momentum by said actuation and to expend momentum to urge said type carrier toward said printing plane for a portion of the stroke of said carrier toward said plane.

67. In a typewriting machine, in combination, a type carrier, a key-lever, devices whereby on printing actuation of said key-lever said type carrier is moved to the printing plane, comprising a pair of connected toggles, one link of one of which is operatively connected to said carrier and another to the frame, means adapted to adjust said point of connection to said frame relatively to the printing plane, and means arranged to acquire momentum by said actuation and to expend momentum to urge said carrier toward said printing plane for a portion of the stroke of said carrier toward said plane.

68. In a typewriting machine, in combination, a type carrier, a key-lever, devices whereby on printing actuation of said key-lever said type carrier is moved to the printing plane, comprising a toggle, one link of which is connected to said carrier and the other to the frame, a second toggle, one link of which is connected to a link of the first mentioned toggle and the other to the frame, and means arranged to acquire momentum by said actuation and to expend momentum to urge said type carrier toward said printing plane for a portion of the stroke of said carrier toward said plane.

69. In a typewriting machine, in combination, a type carrier, a key-lever, devices whereby on printing actuation of said key-lever said type carrier is moved to the printing plane, comprising a toggle, one link of which is connected to said carrier and the other to the frame, a second toggle, one link of which is connected to a link of the first mentioned toggle and the other to the frame, said first mentioned toggle being arranged to give an increasing followed by a decreasing velocity to said type carrier as the latter moves toward the printing plane, and means arranged to acquire momentum by said actuation and to expend momentum to urge said type carrier toward said printing plane for a portion of the stroke of said carrier toward said plane.

70. In a typewriting machine, in combination, a type carrier, a key-lever, devices whereby on printing actuation of said key-lever said type carrier is moved to the printing plane, comprising a lever, and a weight so connected to said lever as to move in a path increasing in radius for a portion of the stroke of said type carrier toward the printing plane.

71. In a typewriting machine, in combination, a type carrier, a key-lever, devices whereby on printing actuation of said key-lever said type carrier is moved to the printing plane, comprising a toggle, and a weight connected to and offset from the knuckle of said toggle.

72. In a typewriting machine, in combination, a type carrier, a key-lever, devices whereby on printing actuation of said key-lever said type carrier is moved to the printing plane, comprising a toggle, one link of which is connected to said carrier, a second toggle one link of which is connected to a link of said first mentioned toggle and the other to the frame, and a weight connected to a link of said second toggle.

73. In a typewriting machine, in combination, a type carrier, a key-lever, and devices whereby on printing actuation of said key-lever said type carrier is moved to the printing plane, comprising a pair of toggles, one of which is operatively connected to said type carrier, a weight connected to one of said toggles, and operative connections between one of said toggles and said key-lever permitting a movement of said toggles in a direction to effect printing independent of movement of said key-lever.

74. In a typewriting machine, in combination, a type carrier, a key-lever, and devices whereby on printing actuation of said key-lever said type carrier is moved to the printing plane, comprising means arranged to acquire momentum by said actuation and to expend momentum to urge said type carrier toward said printing plane for a portion of the stroke of said carrier toward said plane, said momentum acquiring means being resiliently supported.

75. In a typewriting machine, in combination, a type carrier, a key-lever, and devices whereby on printing actuation of said key-lever said type carrier is moved to the printing plane, comprising means arranged to acquire momentum by said actuation and to expend momentum to urge said type carrier toward said printing plane for a portion of the stroke of said carrier toward said plane, said momentum acquiring means being resiliently supported, and means adapted to cause rebound of said momentum acquiring means.

76. In a typewriting machine, in combination, a type carrier, a key-lever, and devices

whereby on printing actuation of said key-lever said type carrier is moved to the printing plane, comprising means arranged to acquire momentum by said actuation and to expend momentum to urge said type carrier toward said printing plane for a portion of the stroke of said carrier toward said plane, said momentum acquiring means being resiliently supported, and a stop in the path of said resilient supporting means.

77. In a typewriting machine, in combination, a type carrier, a key-lever, and devices whereby on printing actuation of said key-lever said type carrier is moved to the printing plane, comprising means arranged to acquire momentum by said actuation and to expend momentum to urge said type carrier toward said printing plane for a portion of the stroke of said carrier toward said plane, and levers with which said momentum means is associated so as to cause an increasing leverage from a point outside the printing plane to said plane.

78. In an apparatus of the character described, in combination, a type carrier, a key-lever, an escapement, devices whereby on printing actuation of said key-lever said type carrier is moved to the printing plane comprising means arranged to acquire momentum by said actuation and to expend momentum to urge said type carrier toward said printing plane for a portion of the stroke of said carrier toward said plane, means adapted to relieve the type carrier from the direct impulse of said key-lever prior to printing impression and force the type carrier to printing impression while so relieved, and means adapted to actuate said escapement when said key-lever is at the limit of its printing stroke.

79. In a typewriting machine, in combination, a movable type carrier, energy storing means, an actuating key, and operative connecting means between said elements to effect simultaneously, upon operation of said key, a storage of energy in said first-mentioned means and a quick transposition of said type carrier to a position adjacent its printing plane with a gradual reduction of the momentum of the latter during the final portion of said transposition thereof.

80. In a typewriting machine, in combination, a movable type carrier, energy storing means, an actuating key, and operative connecting means between said elements to effect simultaneously, upon operation of said key, an increasing storage of energy in said first-mentioned means and a quick transposition of said type carrier to a position adjacent its printing plane with a gradual dissipation of substantially all the momentum of the latter during the final portion of said transposition thereof.

81. In a typewriting machine, in combination, a movable type carrier, energy storing means, an actuating key, and operative connecting means between said elements to effect simultaneously a storage of energy in said first-mentioned means and a quick transposition of said type carrier to a position adjacent its printing plane with a gradual dissipation of momentum of the latter during the final portion of said transposition thereof and thereafter to convert such stored energy into printing movement of said type carrier.

82. In a typewriting machine, in combination, a movable type carrier, energy storing means, an actuating key, and operative connecting means between said elements to effect, upon operation of said key, a storage of energy in said first-mentioned means and a quick transposition of said type carrier to a position adjacent its printing plane with a gradual dissipation of substantially all the momentum of the latter during the final portion of said transposition thereof and uninterruptedly thereafter to convert said stored energy into printing movement of said type carrier independently of said key.

83. In a typewriting machine, in combination, a movable type carrier, energy storing means other than said type carrier, an actuating key to effect a storage of energy in said means, and means to convert gradually substantially all of such stored energy into relatively slow printing movement of said type carrier.

84. In a typewriting machine, in combination, a movable type carrier, and means to effect a printing movement thereof, said means including a momentum accumulator associated with said type carrier for effecting a relatively short movement of the latter during a relatively long movement of said momentum accumulator.

85. In a typewriting machine, in combination, a normally retracted type carrier, and operating means to effect printing movement thereof, said means including a momentum accumulator having a speed-reducing and power-increasing operative connection with said type carrier.

86. In a typewriting machine, in combination, an actuating key, a substantially rigid type carrier, and operating means to effect a continuous movement thereof to its printing plane, said means including a momentum accumulator having a lost-motion connection with said actuating key and having a power-increasing leverage connection with said type carrier during final travel of the latter.

87. In a typewriting machine, in combination, a platen, a substantially rigid type carrier, an actuating key for the latter, and operative connecting means between said key and said type carrier to effect printing movement of the latter to a limit determined

substantially independently of said platen and of said key, said means including a momentum accumulator associated with said key and said type carrier in an operative relation to store energy during a predetermined movement of the former and to expend such energy to move the latter independently of said key.

88. In a pressure-printing typewriting machine, in combination, a movable type carrier, and means to effect a quick transposition thereof to a position adjacent its printing plane and with a gradual dissipation of substantially all the momentum thereof during the final portion of said transposition, said means including a momentum accumulator associated with said type carrier for effecting a continued printing movement thereof.

89. In a pressure-printing typewriting machine, in combination, a movable type carrier, a momentum accumulator other than said type carrier, and means to effect simultaneously an increasing momentum of said accumulator and a quick transposition of said type carrier to a position adjacent its printing plane with a gradual dissipation of momentum of said type carrier during the final portion of said transposition thereof.

90. In a typewriting machine, in combination, a movable type carrier, an actuating key having its travel limited independently of said type carrier, an operative connection between said key and said type carrier to effect a quick transposition of the latter through the major portion of its travel toward the printing plane and with a gradual reduction of the momentum thereof during the final portion of said transposition, said connection including means to effect printing movement of said type carrier after said actuating key reaches its limit of travel, and escapement operating means positioned to be actuated during the printing movement of said type carrier effected by said first mentioned means.

91. In a typewriting machine, in combination, a movable type carrier, means utilizing only manual force to effect printing movement thereof after the arrest of an actuating key, and escapement operating means operable during the printing movement of said type carrier and substantially independently of the momentum of the latter.

92. In a pressure-printing typewriting machine, in combination, a movable type carrier, operating means, including an actuating key, to effect printing movement of said type carrier by utilizing only the force expended on said key and permit a partial retraction thereof from the printing plane independently of said actuating key, and escapement operating means operable during the printing movement of said type carrier and substantially independently of the momentum of the latter.

93. In a typewriting machine, in combination, a platen, a movable type carrier, an actuating key for said type carrier having its movement limited independently of the latter and prior to the printing movement of the same, and means to limit the printing movement of said type carrier substantially independently of said platen and of said key.

94. In a typewriting machine, in combination, a platen, a movable type carrier, an actuating key for said type carrier having its movement limited independently of the latter and prior to the printing movement of the same, means to limit the printing movement of said type carrier substantially independently of said platen and of said key, and means to effect printing movement of said type carrier substantially independently of the momentum thereof.

95. In a typewriting machine, in combination, a type carrier, an actuating key therefor having its movement arrested independently of said type carrier and prior to the printing movement of the latter, and means to insure a relatively short, slow and forcible printing movement of said type carrier after the arrest of movement of said key and substantially independently of the momentum of said type carrier.

96. In a typewriting machine, in combination, a key lever having a limited depression, a type carrier, means for moving the type carrier from the key lever at a gradually increasing, thence at a gradually decreasing rate, and means for relieving the key lever from work during the final travel of the type, said means comprising a plurality of power multiplying devices and a member for effectively actuating said devices after the movement of the key lever has been arrested.

97. In a typewriting machine, in combination, a key lever, a type carrier, means for moving the type carrier from the key lever at a gradually increasing and thence at a gradually decreasing rate, means for arresting the movement of the key lever before the printing moment, and means including a lost motion device between the key lever and the type for permitting the printing to take effect subsequent to the arrest of the key lever.

98. In a typewriting machine, in combination, a type carrier, a key lever, devices whereby on printing actuation of said key lever said type carrier is moved to the printing plane comprising a pair of connected toggles, and a weight connected to one of said pairs so as to initially move in a direction toward the printing plane.

99. In a typewriting machine, in combination, a type carrier, a key lever, devices whereby on printing actuation of said key lever said type carrier is moved to the printing plane comprising a pair of toggles, one link of one pair being connected to the type carrier and the other link of the same pair being connected to the other toggle at a point intermediate the ends of said link, and a weight connected to said other toggle so as to initially move toward the printing plane.

100. In a typewriting machine, in combination, a type carrier, a key lever, a universal bar, means adapted to limit the printing stroke of said key lever, devices whereby on printing actuation of said key lever said type carrier is moved to the printing plane, comprising an element operatively connected to said type carrier, an element operatively connected to said key lever, said elements having power transmitting portions adapted to move toward and from each other, and a weight operatively connected to the element connected to said type carrier adapted to expend momentum and thereby cause the operation of the universal bar after the printing actuation of said key lever.

101. In a typewriting machine, in combination, a type carrier, a weight, a key adapted to move said type carrier to near the printing plane, actuating means of initial low power ratio between said key and said weight for imparting movement to the latter, and actuating means of high power ratio between said weight and said type carrier for completing the stroke of the latter by said weight.

102. In a typewriting machine, in combination, a type carrier, a weight, a key, mechanism between said key and said type carrier for moving the latter to the printing plane, said mechanism including means of substantially constant low power ratio between said key and said weight for imparting movement to the latter, and actuating means of increasing power ratio between said weight and said type carrier for completing the stroke of the latter by said weight.

103. In a typewriting machine, in combination, a type carrier, means including an energy storing member for moving the type toward the printing plane with a power ratio which increases substantially to infinity as the printing plane is reached, and supplemental means to absorb the momentum of said weight when the power ratio has become high.

104. In a typewriting machine, in combination, a type carrier, a key, means to permit said key to move said type carrier to near the printing plane, means for completing the movement of the type carrier to the printing plane, said last-mentioned means being adapted to impart a return impulse to said key during the return movement of said carrier.

105. In a typewriting machine, in combination, a type carrier, a key lever, and an operative connection between said parts to insure instant transmission of initial motion from the latter to the former and to permit final movement of the type to print independently of the latter, said connection including a toggle having links movable to straightened position in a line substantially parallel with the direction of final movement of the type to print.

106. In a typewriting machine, in combination, a type carrier, a key lever having a depression limited prior to movement of the type to print, and an operative connection between said elements to effect movement of said type carrier toward printing position, said connection including a toggle having a thrust link pivoted to said type carrier and having its links when straightened disposed substantially parallel to the final movement of the type to print, said parts mentioned including means to store energy during depression of said key lever and to expend such energy after arrest of said key lever to effect printing of the type.

107. In a typewriting machine, in combination, a platen, a type carrier having a type movable to print, a key lever, and operative connecting means between said type carrier and key lever to actuate and limit movement of the former, said parts including means to store energy during actuation of said key lever and to expend such energy substantially independently of the latter to move said type to print, said connecting means including a toggle and a bell crank lever having one arm connected with said toggle and another arm connected with said key lever.

108. In a typewriting machine, in combination, a platen, a type carrier having a type movable toward the former to print, a key lever for said type carrier, and means to transmit movement of said key lever to insure quick transposition of said type to a position adjacent said platen, to store energy during said movement and to insure the expenditure of such energy to move the type to print, said means including a toggle having a thrust link pivoted to said type carrier and another pivoted to a fixed part of the machine, said toggle when straightened being disposed substantially parallel to the direction of final movement of the part of said type carrier to which said first link is connected.

109. In a typewriting machine, in combination, a platen, a type carrier having a type thereon movable toward the platen to print,

a key lever having its movement limited prior to the printing action of said type, and power-transmitting and position-controlling means for said type carrier including a toggle having one link connected to the latter and another to a stationary part of the machine and adapted for straightening to limit the movement of that portion of the type carrier to which said link is connected independently of said platen and of said key lever.

In testimony whereof I affix my signature, in the presence of two witnesses.

NILS H. ANDERSON.

Witnesses:
EDWARD U. CLARKE,
E. H. RUSSELL.

N. H. ANDERSON.
TYPE WRITING MACHINE.
APPLICATION FILED AUG. 6, 1913.

1,261,752.

Patented Apr. 9, 1918.

4 SHEETS—SHEET 1.

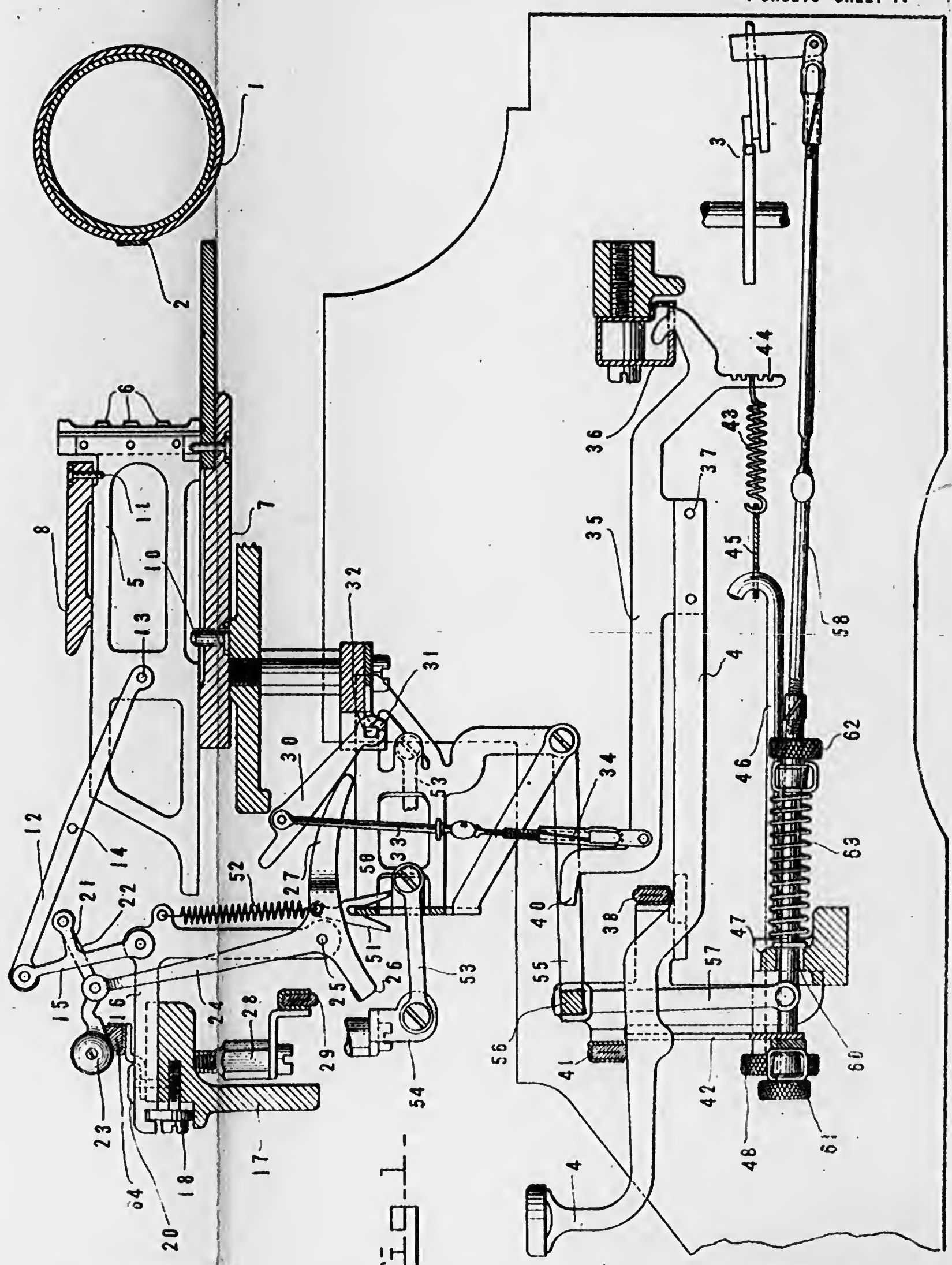

Fig. 1.

WITNESSES:
Eric B. Kramer.
Jesse A. Holton.

INVENTOR
N. H. Anderson
BY
Duell, Barfield & Duell
ATTORNEYS

434

N. H. ANDERSON.

TYPE WRITING MACHINE.

APPLICATION FILED AUG. 6, 1913.

1,261,752.

Patented Apr. 9, 1918.

4 SHEETS—SHEET 2.

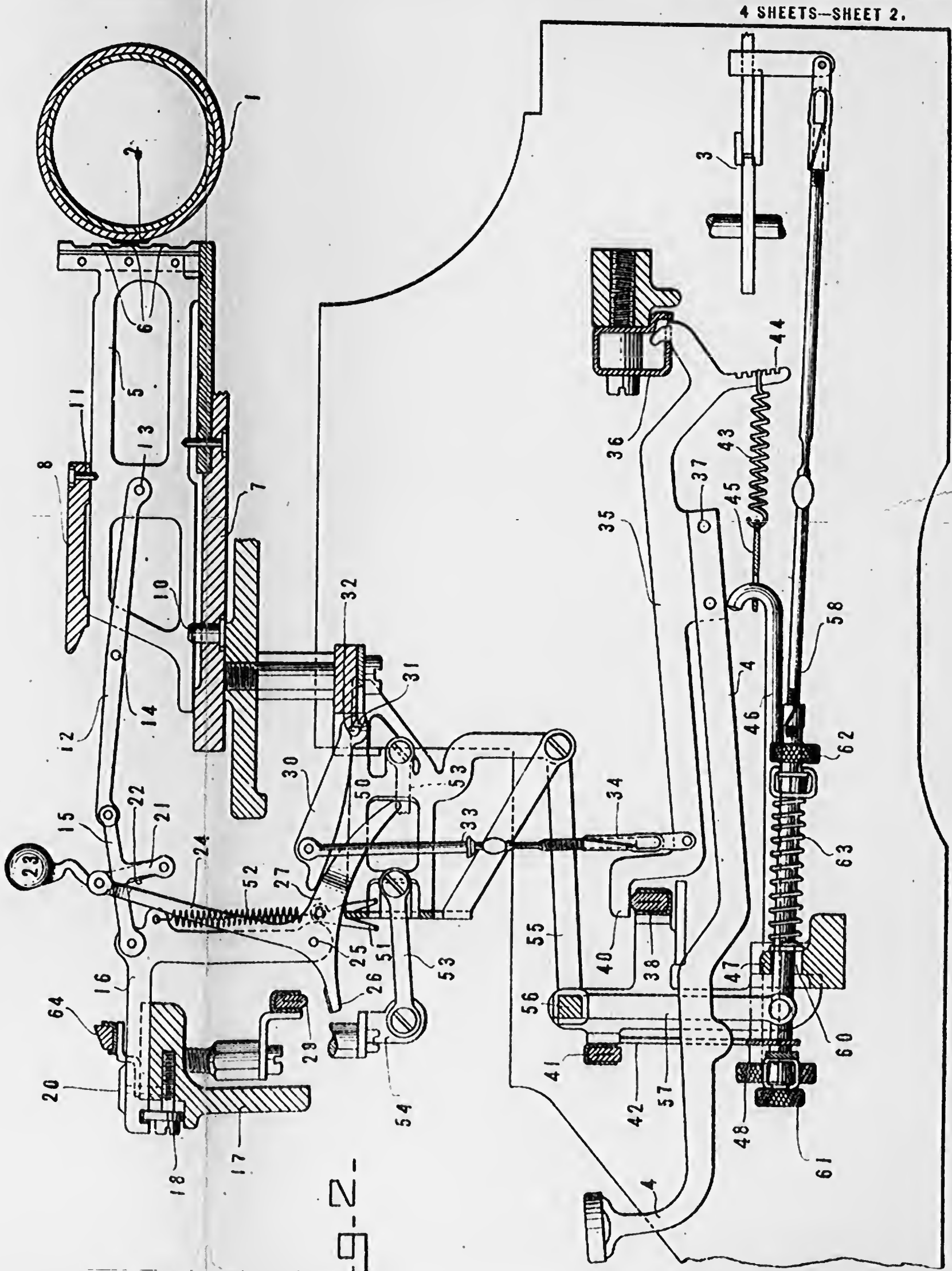

Fig. 2.

WITNESSES:

Eric B. Kramer

Jesse A. Holton

INVENTOR

N. H. Anderson

BY

Duell, Mansfield & Duell

ATTORNEYS

N. H. ANDERSON.
TYPE WRITING MACHINE.
APPLICATION FILED AUG. 6, 1913.

1,261,752.

Patented Apr. 9, 1918.
4 SHEETS--SHEET 3.

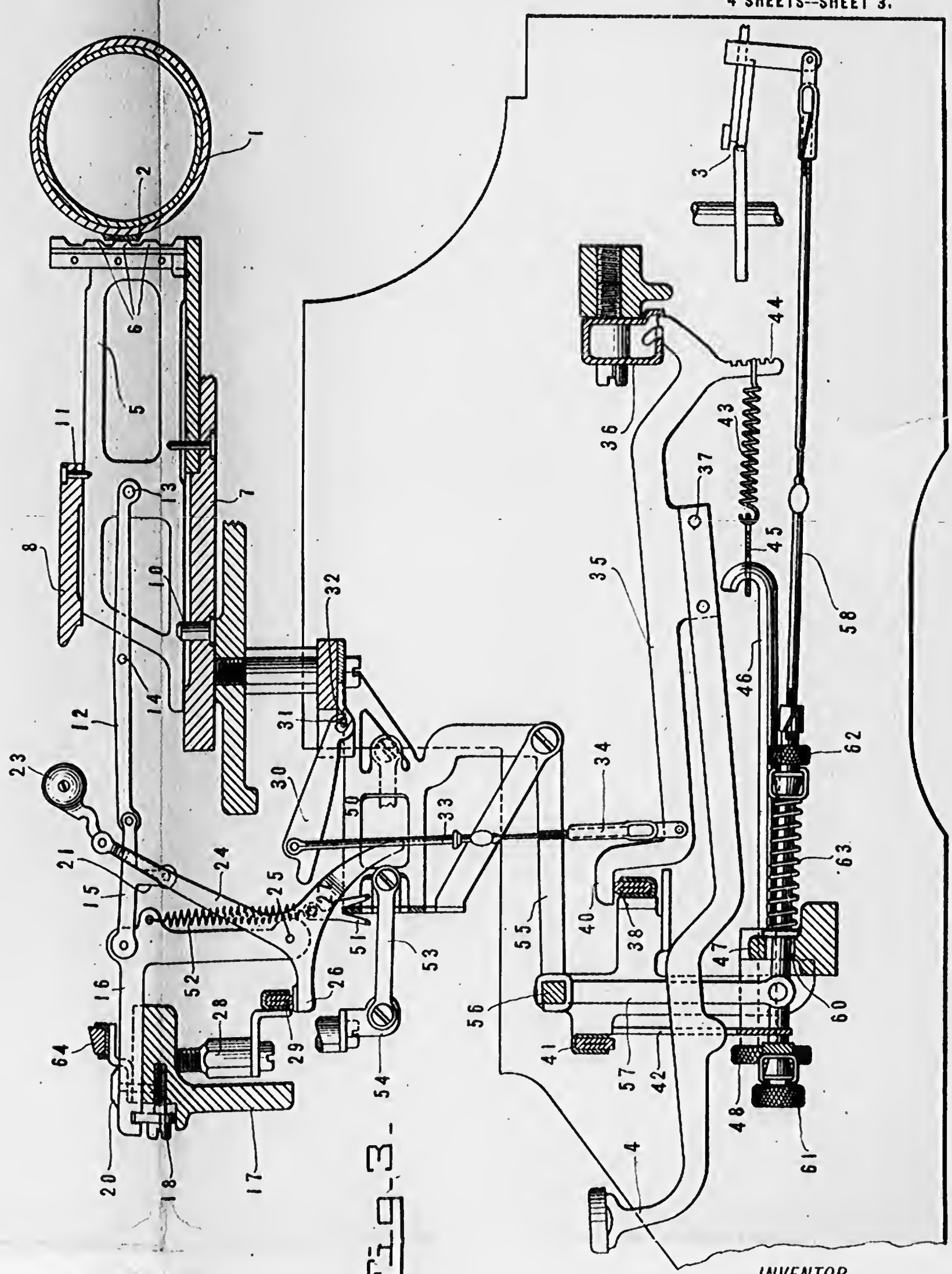

Fig. 3.

WITNESSES:
Eric B. Kramer.
Jesse G. Holton.

INVENTOR
N. H. Anderson
BY
Duell, Warfield & Duell
ATTORNEYS

436

N. H. ANDERSON.
TYPE WRITING MACHINE.
APPLICATION FILED AUG. 6, 1913.

1,261,752.

Patented Apr. 9, 1918.
4 SHEETS—SHEET 4.

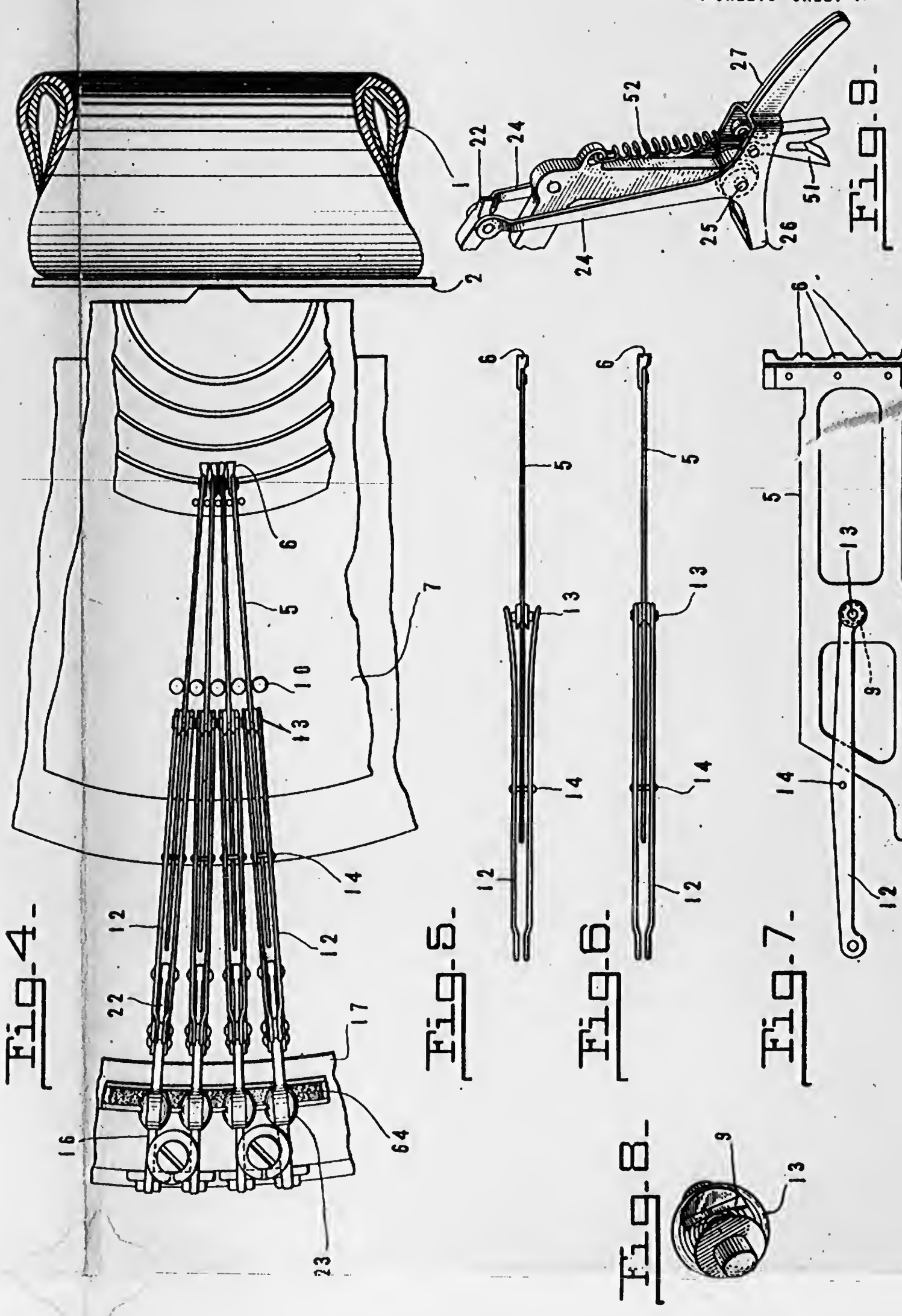

Witnesses:
Eric B. Kramer.
Jesse A. Holton.

H. H. Anderson Inventor
By his Attorneys
Duell Warfield & Duell

UNITED STATES PATENT OFFICE.

NILS H. ANDERSON, OF MIDDLETOWN, CONNECTICUT, ASSIGNOR TO THE NOISELESS TYPEWRITER COMPANY, OF MIDDLETOWN, CONNECTICUT, A CORPORATION OF CONNECTICUT.

TYPE-WRITING MACHINE.

1,261,752. Specification of Letters Patent. Patented Apr. 9, 1918.

Application filed August 6, 1913. Serial No. 783,331.

To all whom it may concern:

Be it known that I, NILS H. ANDERSON, a citizen of the United States, residing at Middletown, in the county of Middlesex and State of Connecticut, have invented certain new and useful Improvements in Type-Writing Machines, of which the following is a full, clear, and exact description, such as will enable others skilled in the art to which it appertains to make and use the same.

This invention relates to typewriting machines, and with regard to certain more dominant features thereof, to type actions and associated and co-acting parts thereof.

One of the objects of the present invention is to provide a type action of simple and practical construction which will be durable and efficient in action. Another object is to provide a type action of the above character having a desirable touch and capable of being operated at high speed. Another object is to provide a type action of the above first mentioned character which will be comparatively noiseless in operation. A further object is to provide practical means for mounting and connecting the various parts so as to enhance their ease of movement and reduce wear. Other objects will be in part obvious and in part pointed out hereinafter.

The invention accordingly consists in the features of construction, combinations of elements and arrangement of parts which will be exemplified in the construction hereinafter set forth, and the scope of the application of which will be indicated in the following claims.

In the accompanying drawings wherein is shown one of the various possible embodiments of this invention,

Figure 1, 2 and 3 are elevational views of a type action and co-acting parts sufficient in detail to understand the application of the present invention, in normal, intermediate, and printing positions, respectively;

Fig. 4 is a plan view showing a plurality of type actions in their radially disposed relation to the printing point;

Figs. 5, 6 and 7 are detail views showing the manner of connecting the type bar to the actuating mechanism.

Fig. 8 is a detail perspective view of a pivot member, and

Fig. 9 is a detail perspective view of a part of the type action.

Similar reference characters refer to similar parts throughout the several views of the drawings.

Referring now in detail to the accompanying drawings, and more particularly to Fig. 1, a cylindrical platen roller 1, here shown diagrammatically in section, is provided with a flat metallic platen 2. The platen roller is mounted in any suitable form of vertically shiftable carriage, not herein shown, movable in the well-known manner from right to left, under the action of an escapement mechanism 3 operated at each actuation of the machine. Each key-lever 4 is connected with a type carrier 5 mounted to slide back and forth relatively to the platen by means of suitable pressure multiplying and speed controlling elements as will now be described in detail.

The type carrier is provided at its rear end with three type 6 for printing different case characters when co-acting with the flat platen 2 as the carrier slides rearwardly between a base-plate 7 and a top plate 8 in the upper rear part of the machine. The carrier is held and guided in its movement by upwardly and downwardly projecting pins 10 and 11, mounted in the bottom and top plates respectively. To the central part and at either side of the type carrier is connected a pair of substantially flat sheet metal links 12 of more or less resilient material which are adapted to be snapped over a central pivot member 13, as clearly shown in Fig. 8. The pivotal connection between the type action and the type carrier comprises what might be termed a ball and socket connection, that is, the type carrier is provided with a central opening having a single flattened side within which is placed the spherical pivotal member 13, having a notch 9 cut in one side to engage the flattened side of the opening in the type carrier, thus to prevent lateral removal thereof when assembled. The pivotal member is also provided with a stud at each side thereof adapted to engage openings in the ends of the duplex links 12 which are

sprung into position thereover in the manner shown in Figs. 5 and 6. This form of connection permits a slight amount of angular movement between the parts of the type action and more specifically between the connecting links 12 and the type carrier itself, as well as providing a more simple form of connection permitting greater ease and a less expense in assembling and changing parts.

The links 12 are connected at their central portion by means of a stud 14 to prevent spreading and are also provided with a pivotal connection at their opposite ends with a pair of links 15, the opposite ends of which are in turn pivotally mounted upon an L-shaped bracket 16 mounted on a front plate 17 of the frame of the machine.

This bracket is capable of adjustment in a fore and aft direction by means of a set-screw 18 engaging a tapped-out recess in the front wall and is held in adjustment by means of a vertically disposed clamp screw 20 engaging a similarly tapped-out recess intermediate adjacent actions, as clearly shown in Fig. 4. By loosening the clamp-screw 20 between any two adjacent actions, the adjusting screw 18 of either action may be turned in one direction or the other to vary the limit of throw of the type carrier, thus regulating the pressure with which the type co-acts with the paper carried by the platen. As the links connecting the bracket and the type carrier form a toggle which assumes extended position, as shown in Fig. 3, when the type action is actuated, the limit of throw of any type carrier can thus be positively adjusted and the pressure of all the type actions made uniform, thus producing a typewritten page which will be conspicuous for its absence of extremely heavy or light printed characters.

The link 15 is composed of two parts, one upon each side of the bracket, and each part is provided with an off-set portion 21 to which is pivotally connected the rearward arm 22 of a momentum acquiring means, preferably a momentum accumulator weight 23, which arm in turn, is pivotally connected near its middle to the upper arm 24 of a sub-lever, preferably a bell-crank lever. This bell-crank lever is composed of two parts mounted on either side of the bracket 16 and pivoted at 25 on the lower part thereof as shown clearly in Fig. 9.

This bell-crank lever is provided with two arms 26 and 27 extending forward and rearward, respectively, from the pivot 25. The forward arm 26 is adapted to co-act with a pad 29 of felt or other suitable semi-resilient material mounted upon a support 28 in the front wall 17 of the machine when the type action is moved to printing position. The rear arm 27, which is the longer of the two, is provided with an upper convex surface and is adapted to coact with a second sub-lever 30 pivotally mounted at its rear end 31 on a transverse wire 32 having a relatively fixed position in the frame of the machine.

It will, of course, be understood that the wire 32, upon which the sub-lever 30 is mounted, is common to all of the type actions. As herein shown, wire 32, upon which the open forked end 31 of the lever 30 is mounted, is reduced or flattened on one side. This form of construction facilitates the assembling or removal of the lever, for it will be clear from the drawings that by swinging the lever 30 downwardly into a vertical position, after removing the action and disconnecting the pull wire, the reduced or flattened portion of the wire 32 will then occupy a relative position parallel to one of the straight sides of the open end, thus permitting the lever 30 to drop away therefrom.

Near the forward end of the lever 30 is pivotally connected a pull wire 33 provided with a suitable adjustable connecting means or clip 34, the lower end of which is connected with the body portion of the key-lever 4.

It will thus be seen that as the key-lever 4 is depressed, or moved on its printing actuation stroke, the lever 30 and rear arm 27 of the bell crank sub-lever will have a rocking or heel and toe action, the points of contact, or power transmitting portions, of the sub-levers progressively approaching the fulcrum of the bell crank lever. Such form of connection has several material advantages; for instance the point of initial engagement between these parts when the action is in normal position provides a relatively large leverage for the bell crank lever, which moves the type carrier toward the printing position, thus producing an easy and desirable initial touch. However, as the key-lever continues its downward movement under the touch of the operator, the point of contact between the lever 30 and the bell crank lever arm 27 moves toward the pivot point 25, thus reducing the leverage on the bell crank lever, but increasing its rate of movement, thereby materially increasing the manifolding properties of the action as a whole.

In order to further increase the pleasantness of touch in an action of this character, the key-lever is composed of two parts, one of which 35 is of relatively heavy material and is pivotally mounted at its rear end to a fulcrum bar 36. The other 4 is of relatively light material and is riveted or otherwise secured at 37 to the under side of the main portion 35 of the key-lever. The downward movement of the key-lever is limited by a pad 38 of felt or other semi-resilient

material positioned to receive and arrest the forward end 40 of the member 35. The upward movement of the key-lever is limited by a similar pad 41 mounted at the top of a comb member 42 adapted to guide the key-lever 4 in its up and down movement. It will thus be seen that as the key-lever 4 is depressed, the body portion 35 co-acts with the stop 38 and its movement is arrested. The key itself, however, being mounted upon the part 4 of relatively lighter material presents a certain resiliency to the finger of the operator which renders the rapidly repeated operations less tiresome.

A return spring 43 is adjustably connected to a downwardly projecting lug 44 on the under side of the key-lever. The other key-levers (not shown) are provided with similar springs, all of which are connected to a single yoke 45 which in turn is connected by means of a link 46 to a fixed portion 47 of the front part of the frame. By turning a holding nut 48 on the forward end of the connecting link 46 the tension of all the key-levers may be simultaneously regulated.

As these several features regarding the key-lever construction and adjustment form no part of the present invention specifically, except in so far as certain features co-act with the type action as a whole, it is thought to be unnecessary to describe the same more in detail, as they will form the subject-matter of one or more separate applications.

Instead of positioning the universal bar beneath the key-levers, as in many forms of front-strike machines, it is in this embodiment positioned in the upper front part of the machine whereby it may be actuated directly by similar elements in each type action. As herein shown, the universal bar comprises a frame 50 in the form of an arc and is positioned just below and in rear of the pivot point 25 of each bell crank lever. A fork or yoke 51 is swiveled on the rearwardly extending arm 27 near the point of connection of a return spring 52 of each bell-crank lever and normally rests slightly above but straddling the universal bar. The universal bar is pivotally supported by means of a plurality of arms 53 of substantially the same length connected to depending brackets 54 from the frame of the machine. The lower part of the universal bar frame is pivotally supported at the ends of three arms 55 of substantially the same length, only one of which is herein shown, connected respectively with either end and the center of a universal rock shaft 56. The rock shaft is provided with a downwardly extending arm 57 connected at its lower end with an adjustable pull wire 58 extending fore and aft of the machine; the rear end of the pull wire being connected with the rocker member of the escapement mechanism 3. The pull wire 58 passes freely through an opening 60 in the transverse beam 47 of the frame of the machine as well as the comb 42 for the key-levers. A self-locking adjusting nut 61 is provided at the forward end of the pull wire for adjusting the distance between the fork and universal bar, and another 62 at a point in the rear of the beam, between which second nut 62 and beam 47 is coiled a spiral return spring 63. By means of these adjusting means the relation of the universal bar 56 to the bell crank lever may be regulated as well as the proper timing of the escapement mechanism and tension of the action as a whole. However, as these features form no part of the present invention specifically, except in so far as they co-act with the type action, a more detailed description of the various features and advantages is believed to be unnecessary.

The operation of the present device is substantially as follows:

Assuming a machine to be in normal position, as shown in Fig. 1, as the key-lever 4 is depressed, or printingly actuated, movement is transmitted to the pull wire 33 connected with the body portion 35 of the key-lever to the forward end of the lever 30 which in turn rocks downwardly upon the upper curved surface of the rear arm 27 of the bell crank-lever. This movement causes the upper end of the bell crank arm 24 to swing rearward on its printing movement about its pivotal point of support 25, which in turn carries the rear arm 22 of the momentum accumulator rearward and downward. As the movement continues, the toggle formed by the links 15 and 12 moves toward straightened position, as shown in Fig. 2. Likewise the rear arm 22 of the momentum accumulator and the upper or longer arm 24 of the bell crank lever assume a partially extended reverse toggle. As soon as the parts reach the position shown in Fig. 2, the downward movement of the body portion 35 of the key-lever is arrested by the semi-resilient pad 38 engaging the forward end thereof, which of course, arrests the key-lever proper in a silent and resilient manner. As this action takes place so rapidly under the normal staccato touch, the weighted end 23 of the momentum accumulator or energy-storing means acquires a certain amount of momentum or force, depending partially on the length of its swinging radius, in rearward and downward direction to complete the printing operation by forcing the type carrier to the printing plane, as shown in Fig. 3, that is, with the type in contact with the paper carried by the platen. It will be noted that at this point the toggles formed by the links 12 and 15 as well as the reverse toggle formed by the rearwardly extending arm 22 of the momentum accumulator and the upwardly extending arm 24 of

the bell crank lever assume a straightened positions. It will also be noted that in the position shown in Fig. 3, the power transmitting portion of the rear arm 27 of the bell crank lever has moved out of contact with the power transmitting portion of the lever 30 and has placed the spiral return spring 52 under tension; there is therefore nothing to prevent the momentum accumulator from performing its natural tendency to rebound from stop bar 29 with the assistance of this return spring, to carry the type immediately out of engagement with the platen regardless of the release of the key-lever. It is during the final movement, that is, while the carrier is moving from the position shown in Fig. 2 to that shown in Fig. 3, or while movement of the type carrier is effected by the energy stored in weight 23, that the fork 51 carried by the rear arm 27 of the bell crank lever coacts with the universal bar 50 to urge the same downward. This downward movement of the universal bar will, through its connecting mechanism, rotate the universal rock shaft 56, which in turn, through the pull wire 58, actuates the dog rocker of the escapement mechanism 3. Owing to its mounting the universal bar will have a slight movement longitudinal of the sub-lever, or arm 27, and the element 51, being movably connected to said sub-lever will readily follow this longitudinal movement and be retained in pressing position, thus dispensing with substantial friction between the universal bar and this sub-lever during actuation of the escapement.

The escapement mechanism which is preferably of the "reverse" style, that is, with the fixed dog normally in engagement with the teeth, will complete its operation on the down stroke of the key lever when normally operated, thus permitting the carriage to move a letter space distance from the right to left. The movement of the type from the position shown in Fig. 2 to that shown in Fig. 3, and return, is almost instantaneous and yet being pressure-operated by means of toggles and power multiplying devices interposed between the type carrier and the key lever, its operation is substantially noiseless.

When the key-lever is released the parts naturally return to the position shown in Fig. 1, under the action of the several return springs 43, 52 and 63 which all co-act one with the other to produce the desired result.

A pad 64 is provided on the upper surface of the front wall of the machine having an upwardly and rearwardly inclined upper surface co-acting with an inclined surface of the under side of the momentum accumulator weight 23 adapted to cushion its return and prevent a rebound thereof. The center of the weight 23 does not move in the arc of a circle, due to its compound pivotal connections and the path of travel of the final portion of its return movement is in a substantially straight line at a very slight angle to the upper surface of this pad. Referring to Fig. 1, it will be seen that the weight 23, will be translated initially toward the printing plane as soon as the arm 24 is actuated on its printing stroke, said weight being so disposed relative to the pivotal connecting point 15 as to initially translate in a rearward direction. The angle between the link 22 and the arm 24 is an obtuse angle, so that the type assumes position closer to the platen at the time the weight is in its most effective forcing position than it would be if said angle were acute initially.

It will be noted that the various parts comprising the present embodiment of the invention are so constructed and connected as to cause a minimum amount of wear; the various cushioning and spring devices for arresting the movement of such movable parts produce, in their co-action with the other parts, a machine which is substantially silent in its operation.

It is thus seen that this invention provides a practical and simple construction which is durable and highly efficient in action and one that is adapted to accomplish, among others, all of the objects and advantages above set forth.

As many changes could be made in the above construction and many apparently widely different embodiments of this invention could be made without departing from the scope thereof, it is intended that all matter contained in the above description or shown in the accompanying drawings shall be interpreted as illustrative and not in a limiting sense.

Having described my invention, what I claim as new and desire to secure by Letters Patent is:

1. In a typewriting machine, in combination, a platen, a type carrier adapted to coact therewith, a key lever and intermediate mechanism for actuating said type carrier, said mechanism including two levers with a shifting point of contact, a universal bar in the path of travel of one of said levers, and means adapted to effect printing and carry said levers out of contact one with the other whereby the universal bar is actuated.

2. In a typewriting machine, in combination, a platen, a type carrier adapted to coact therewith, a key lever for actuating said type carrier, and intermediate mechanism between said lever and said type carrier comprising a toggle, a bell crank lever connected therewith having a rearwardly extending arm and a lever adapted to have a rocking engagement therewith as the key lever is depressed.

3. In a typewriting machine, in combination, a platen, a type carrier adapted to coact therewith, a key lever for actuating said type carrier, intermediate mechanism between said lever and said type carrier comprising two members having a rocking engagement with each other as the key lever is depressed, and means adapted to carry said members out of engagement with each other during the printing operation.

4. In a typewriting machine, in combination, a platen, a type carrier adapted to coact therewith, a key lever for actuating said type carrier, intermediate mechanism between said key lever and said type carrier comprising two members having a rocking engagement with each other as the key lever is depressed, and a momentum accumulator coacting with one of said members adapted to carry one of said members out of engagement with its coacting member during the printing moment.

5. In a typewriting machine, in combination, a platen, a type carrier adapted to coact therewith, finger-actuated means for operating said type carrier, and intermediate mechanism between said type carrier and said finger-actuated means for transmitting motion from one to the other, said intermediate mechanism comprising a bell crank lever, a member adapted to have a rocking engagement therewith as the finger-actuating means is depressed, and a plurality of toggles interposed between said bell crank lever and said type carrier adapted to assume extended position at the printing moment.

6. In a typewriting machine, in combination, a platen, a type carrier adapted to coact therewith, finger-actuated means for operating said type carrier, and intermediate mechanism between said type carrier and said finger actuated means adapted to transmit motion from one to the other, said intermediate mechanism comprising a lever, a member adapted to have a rocking engagement therewith as the finger-actuating means is depressed, a plurality of toggles interposed between said lever and said type carrier adapted to assume straightened position during the printing moment, and means for returning the said parts to normal position.

7. In a typewriting machine, in combination, a platen, a type carrier adapted to coact therewith, finger-actuated means for operating said type carrier, and intermediate mechanism between said type carrier and said finger-actuated means adapted to transmit motion from one to the other, said intermediate mechanism comprising a bell crank lever, a member adapted to have a rocking engagement therewith as the finger-actuated means is depressed, a plurality of toggles interposed between the pivot point of said bell crank lever and said type carrier adapted to assume straightened position during the printing moment, and means adapted to withdraw the type carrier from its printing position independently of the release of the finger-actuated means.

8. In a typewriting machine, in combination, a type carrier, a key lever having a body portion and an actuating portion of different degrees of resiliency, intermediate connections between the body portion of said key lever and said type carrier, and a resilient stop adapted to engage the body portion of said key lever for arresting its downward movement prior to the printing moment.

9. In a typewriting machine, in combination, a type carrier, a key lever having a body portion and an actuating portion of different degrees of resiliency, connections between the body portion of said key lever and said type carrier adapted to gradually increase and then decrease the rate of movement of the carrier, and a resilient stop adapted to engage the actuating portion of said key lever adapted to arrest its return to normal position.

10. In a typewriting machine, in combination, a type carrier, a key lever having a body portion and an actuating portion of different degrees of resiliency, a toggle between the body portion of said key lever and said type carrier, and separate stops adapted to engage the body portion and the actuating portion of said key lever on its downward and upward movement, respectively.

11. In a typewriting machine, in combination, a type carrier, a key lever, intermediate mechanism therebetween comprising a bell crank lever, an actuating member having rocking engagement with one arm of said bell crank lever, and a resilient stop adapted to co-act with another arm for silently arresting its movement as the key lever is depressed.

12. In a typewriting machine, in combination, a type carrier, a key lever, intermediate mechanism therebetween comprising a bell crank lever, an actuating member having rocking engagement with one arm of said bell crank lever, a resilient stop adapted to co-act with another arm for silently arresting its movement as the key lever is depressed, a universal bar positioned in the path of travel of one of said arms as it oscillates, and means for adjusting its position toward and from the normal position of said arm.

13. In a typewriting machine, in combination, a type carrier, a key lever, a bell crank lever interposed therebetween operatively connected with both, a universal bar in the path of travel of one of the arms of said bell crank lever adapted to be actuated thereby, and a swiveled contact member carried by said bell crank lever for directly actuating said universal bar.

14. In a typewriting machine, in combination, a type carrier, a key lever, a bell crank lever interposed therebetween and connected with both, a universal bar in the path of travel of one of the arms of said bell crank lever adapted to be actuated thereby, and a swiveled fork carried by one arm of said bell crank lever normally resting above said universal bar.

15. In a typewriting machine, in combination, a type carrier, a key lever, a lever interposed therebetween and connected with both, a universal bar in the path of travel of one of the arms of said lever adapted to be actuated thereby, and a fork carried by one of said arms of said lever engaging both sides and top of said universal bar during the printing moment.

16. In a typewriting machine, in combination, a key lever, a type carrier, means for moving the type from the key lever at a gradually increasing, thence at a gradually decreasing rate, and means for relieving the key from work during the final travel of the type carrier, said means comprising two coacting members, and means adapted to carry said members out of engagement after the movement of the key lever has been arrested and to urge the type into engagement with the paper.

17. In a typewriting machine, in combination, a platen, an escapement mechanism for controlling the letter spacing thereof, a type carrier adapted to coact with the paper carried by said platen, a key lever for actuating said type carrier, means for moving the type from the key-lever at a gradually increasing and thence at a gradually decreasing rate, a universal bar directly associated with said means, and means for actuating said universal bar in effecting printing after the movement of the key lever has been arrested.

18. In a typewriting machine, in combination, a platen, escapement mechanism for controlling its letter spacing movement, a type carrier adapted to coact with said platen, a key lever, means for moving the type carrier from the key lever at a gradually increasing and thence at a gradually decreasing rate, means for arresting the key lever prior to the printing moment, and means for relieving the key from further work during the final travel of the type and for actuating the escapement mechanism independently of the subsequent movement of the key lever.

19. In a typewriting machine, in combination, a type carrier, a key-lever, devices whereby on printing actuation of said key-lever said type carrier is moved to the printing plane including a toggle the links of which are operatively connected with said parts and lie at an obtuse angle when said toggle is at the beginning of its printing stroke, and a weight connected to one of said links.

20. In a typewriting machine, in combination, a type carrier, a key-lever, devices whereby on printing actuation of said key-lever said type carrier is moved to the printing plane including a toggle the links of which are operatively connected with said parts and lie at an obtuse angle when said toggle is at the beginning of its printing stroke, and a weight pivotally connected to one of said links as to initially move toward the printing plane.

21. In a typewriting machine, in combination, a type carrier, a key-lever, and devices including a momentum acquiring means whereby on printing actuation of said key-lever, said type carrier is moved to the printing plane, and thereafter assumes a position away from the printing plane when the key-lever is at the limit of its printing stroke, comprising a sub-lever to which said momentum acquiring means is connected and a sub-lever connected to said key-lever, said sub-levers coöperating to transmit varying force on printing actuation of said key-lever.

22. In a typewriting machine, in combination, a type carrier, a key-lever, and devices including a momentum acquiring means whereby on printing actuation of said key-lever, said type carrier is moved to the printing plane, and thereafter assumes a position away from the printing plane when the key-lever is at the limit of its printing stroke, comprising a sub-lever to which said momentum acquiring means is connected and a sub-lever connected to said key-lever, said sub-levers coöperating to transmit decreasing force on printing actuation of said key-lever.

23. In a typewriting machine, in combination, a type carrier, a key-lever, and devices including a momentum acquiring means whereby on printing actuation of said key-lever, said type carrier is moved to the printing plane, and thereafter assumes a position away from the printing plane when the key-lever is at the limit of its printing stroke, comprising a sub-lever to which said momentum acquiring means is connected and a sub-lever connected to said key-lever, said sub-levers coöperating to transmit increasing rate of movement to the first mentioned sub-lever on printing actuation of said key-lever.

24. In a typewriting machine, in combination, a type carrier, a key-lever, and devices including a momentum acquiring means whereby on printing actuation of said key-lever, said type carrier is moved to the printing plane, and thereafter assumes a position away from the printing plane when the key-lever is at the limit of its printing stroke, comprising a sub-lever to which said

momentum acquiring means is connected and a sub-lever connected to said key-lever, said sub-levers having progressively rolling contact to transmit decreasing force on printing actuation of said key-lever.

25. In a typewriting machine, in combination, a type carrier, a key-lever, devices including a momentum acquiring means whereby on printing actuation of said key-lever, said type carrier is moved to the printing plane, and thereafter assumes a position away from the printing plane when the key-lever is at the limit of its printing stroke, a bell crank lever to one arm of which said momentum acquiring means is connected, and a sub-lever connected to said key-lever and disposed to actuate said bell crank lever by contacting the other arm of said bell crank lever progressively toward the fulcrum of said bell crank lever.

26. In a typewriting machine, in combination, a type carrier, a key-lever, devices including a momentum acquiring means whereby on printing actuation of said key-lever, said type carrier is moved to the printing plane, and thereafter assumes a position away from the printing plane when the key-lever is at the limit of its printing stroke, a bell crank lever to one arm of which said momentum acquiring means is connected, and a sub-lever, fulcrumed independently of said bell crank lever, connected to said key-lever and disposed to actuate said bell crank lever by contacting the other arm of said bell crank lever progressively toward the fulcrum of said bell crank lever.

27. In a typewriting machine, in combination, a type carrier, a key-lever, devices whereby on printing actuation of said key-lever said type carrier is moved to the printing plane, comprising means adapted to relieve the type carrier from the direct impulse of said key-lever prior to printing impression, said means comprising a pair of levers respectively operatively connected to said type carrier and said key-lever, the levers of said pair comprising power transmitting portions adapted to move toward and from each other, and a spring adapted to move the lever of said pair which is connected to said type carrier in a direction to cause said portions of said two levers to engage.

28. In a typewriting machine, in combination, a type carrier, a key-lever, devices whereby on printing actuation of said key-lever said type carrier is moved to the printing plane, comprising means adapted to relieve the type carrier from the direct impulse of said key-lever prior to printing impression, said means comprising a pair of sub-levers respectively operatively connected to said type carrier and said key-lever, the levers of said pair comprising power transmitting portions adapted to move toward and from each other, and a spring adapted to move the lever of said pair which is connected to said type carrier in a direction opposed to its printing movement.

29. In a typewriting machine, in combination, a type carrier, a key-lever, and devices whereby on printing actuation of said key-lever said type carrier is moved to the printing plane, comprising means adapted to relieve the type carrier from the direct impulse of said key-lever prior to printing impression, said means comprising a sub-lever connected to said type carrier and a sub-lever connected to said key-lever, said sub-levers coöperating to transmit increasing rate of movement to the first mentioned sub-lever on printing actuation of said key-lever.

30. In a typewriting machine, in combination, a type carrier, a key-lever, and devices whereby on printing actuation of said key-lever said type carrier is moved to the printing plane, comprising means adapted to relieve the type carrier from the direct impulse of said key-lever prior to printing impression, said means comprising a sub-lever connected to said type carrier and a sub-lever connected to said key-lever, said sub-levers coöperating to transmit increasing rate of movement to the first mentioned sub-lever on printing actuation of said key-lever, one of said sub-levers being mounted to move out of contact with the other.

31. In a typewriting machine, in combination, a type carrier, a key-lever, and devices whereby on printing actuation of said key-lever said type carrier is moved to the printing plane, comprising a pair of toggles operatively connected to each other, one of which is operatively connected to said carrier, a pair of levers one of which is connected to one of said toggles and the other to said key-lever, the levers of said pair comprising power transmitting portions adapted to move toward and from each other, and to move from each other on printing actuation of said key-lever.

32. In a typewriting machine, in combination, a type carrier, a key-lever, devices whereby on printing actuation of said key-lever said type carrier is moved to the printing plane, comprising a pair of toggles operatively connected to each other, one of which is operatively connected to said carrier, a pair of levers one of which is connected to one of said toggles and the other to said key-lever, the levers of said pair comprising power transmitting portions adapted to move toward and from each other, and to move from each other on printing actuation of said key-lever, and a spring adapted to move said portion of said lever connected to said toggle toward said other portion.

33. In a typewriting machine, in combination, a type carrier, a key-lever, devices where-

by on printing actuation of said key-lever said type carrier is moved to the printing plane, comprising a pair of toggles operatively connected to each other, one of which is operatively connected to said carrier, a pair of levers one of which is connected to one of said toggles and the other to said key-lever, the levers of said pair comprising power transmitting portions adapted to move toward and from each other, and to move from each other on printing actuation of said key-lever, and a weight operatively connected to one of said toggles so as to expend momentum to move one of said power transmitting portions from the other power transmitting portion at a predetermined point in the path of movement of said carrier toward said printing plane.

34. In a typewriting machine, in combination, a type carrier, a key-lever, devices whereby on printing actuation of said key-lever said type carrier is moved to the printing plane, comprising means adapted to relieve the type carrier from the direct impulse of said key-lever prior to printing impression, said means comprising a pair of sub-levers respectively operatively connected to said type carrier and said key-lever, the levers of said pair comprising power transmitting portions adapted to move toward and from each other, and a momentum acquiring means connected to said first mentioned sub-lever adapted to force the type carrier to printing impression while so relieved.

35. In a typewriting machine, in combination, a type carrier, a key-lever, devices whereby on printing actuation of said key-lever said type carrier is moved to the printing plane, comprising means adapted to relieve the type carrier from the direct impulse of said key-lever prior to printing impression, said means comprising a pair of sub-levers respectively operatively connected to said type-carrier and said key-lever, the levers of said pair comprising power transmitting portions adapted to move into and out of engagement with each other, and a momentum acquiring means connected to said first mentioned sub-lever adapted to force the type carrier to printing impression while so relieved.

36. In a typewriting machine, in combination, a type carrier, a key-lever, devices whereby on printing actuation of said key-lever said type carrier is moved to the printing plane, comprising means adapted to relieve the type carrier from the direct impulse of said key-lever prior to printing impression, said means comprising a pair of sub-levers respectively operatively connected to said type carrier and said key-lever, the levers of said pair comprising power transmitting portions adapted to move toward and from each other, a spring adapted to move the lever of said pair which is connected to said type carrier in a direction opposed to its printing movement, and a momentum acquiring means connected to said first mentioned sub-lever adapted to force the type carrier to printing impression while so relieved.

37. In a typewriting machine, in combination, a type carrier, a key-lever, devices whereby on printing actuation of said key-lever said type carrier is moved to the printing plane, comprising means adapted to relieve the type carrier from the direct impulse of said key-lever prior to printing impression, said means comprising a pair of sub-levers respectively operatively connected to said type carrier and said key-lever, the levers of said pair comprising power transmitting portions adapted to move toward and from each other, a spring adapted to move the lever of said pair which is connected to said type carrier in a direction to cause said portions of said two sub-levers to engage, and a momentum acquiring means connected to said first mentioned sub-lever adapted to force the type carrier to printing impression while so relieved.

38. In a typewriting machine, in combination, a type carrier, a key-lever, devices whereby on printing actuation of said key-lever said type carrier is moved to the printing plane, comprising means adapted to relieve the type carrier from the direct impulse of said key-lever prior to printing impression, said means comprising a sub-lever connected to said type carrier and a sub-lever connected to said key-lever, said sub-levers coöperating to transmit increasing rate of movement to the first mentioned sub-lever on printing actuation of said key-lever, and a momentum acquiring means connected to said first mentioned sub-lever adapted to force the type carrier to printing impression while so relieved.

39. In a typewriting machine, in combination, a type carrier, a key-lever, devices whereby on printing actuation of said key-lever said type carrier is moved to the printing plane, comprising means adapted to relieve the type carrier from the direct impulse of said key-lever prior to printing impression, said means comprising a sub-lever connected to said type carrier and a sub-lever connected to said key-lever, said sub-levers coöperating to transmit increasing rate of movement to the first mentioned sub-lever on printing actuation of said key-lever, one of said sub-levers being mounted to move out of contact with the other, and a momentum acquiring means connected to said first mentioned sub-lever adapted to force the type carrier to printing impression while so relieved.

40. In a typewriting machine, in combination, a type carrier, a key-lever, an escape-

ment, devices whereby on printing actuation of said key-lever said type carrier is moved to the printing plane, comprising a lever operatively connected to said carrier, a lever operatively connected to said key-lever, said two levers having portions adapted to move toward and from each other, and means adapted to arrest the printing actuation of said key-lever and thereby cause one of said portions to move from the other and operate the escapement.

41. In a typewriting machine, in combination, a type carrier, a key-lever, an escapement, devices whereby on printing actuation of said key-lever said type carrier is moved to the printing plane, comprising a lever operatively connected to said carrier, a lever operatively connected to said key-lever, said two levers having portions adapted to move toward and from each other, and a stop adapted to arrest the printing actuation of said key-lever and thereby cause one of said portions to move from the other and operate the escapement.

42. In a typewriting machine, in combination, a type carrier, a key-lever, an escapement, devices whereby on printing actuation of said key-lever said type carrier is moved to the printing plane, means adapted to actuate said escapement after the key-lever is at the limit of its printing stroke, comprising a lever forming a part of said actuating means, and a universal bar movable longitudinally of one arm of said lever, said lever carrying a relatively movable element adapted to move said universal bar.

43. In a typewriting machine, in combination, a type carrier, a key-lever, an escapement, devices whereby on printing actuation of said key-lever said type carrier is moved to the printing plane, means adapted to actuate said escapement after the key-lever is at the limit of its printing stroke, comprising a lever forming a part of said actuating means, and a universal bar movable longitudinally of one arm of said lever, said lever carrying a swiveled element adapted to move said universal bar.

44. In a typewriting machine, in combination, a type carrier, a key-lever, an escapement, devices whereby on printing actuation of said key-lever said type carrier is moved to the printing plane, means adapted to actuate said escapement after the key-lever is at the limit of its printing stroke, comprising a lever forming a part of said actuating means, and a universal bar movable longitudinally of one arm of said lever, said lever carrying a relatively movable element adapted to move said universal bar, said movable element comprising a fork adapted to straddle said universal bar.

45. In a typewriting machine, in combination, a type carrier, a key-lever, devices including a momentum acquiring means whereby on printing actuation of said key-lever, said type carrier is moved to the printing plane, and thereafter assumes a position away from the printing plane when the key-lever is at the limit of its printing stroke, comprising a sub-lever to which said momentum acquiring means is connected and a sub-lever connected to said key-lever, said sub-levers coöperating to transmit varying force on printing actuation of said key-lever, and means adapted to arrest said key lever prior to printing impression by said type carrier.

46. In a typewriting machine, in combination, a type carrier, a key-lever, an escapement, devices including a momentum acquiring means whereby on printing actuation of said key-lever, said type carrier is moved to the printing plane, and thereafter assumes a position away from the printing plane when the key-lever is at the limit of its printing stroke, comprising a sub-lever to which said momentum acquiring means is connected, a sub-lever connected to said key-lever, said sub-levers coöperating to transmit varying force on printing actuation of said key-lever, and means adapted to actuate said escapement when said key-lever is at the limit of its printing stroke.

47. In a typewriting machine, in combination, a type carrier, a key-lever, devices whereby on printing actuation of said key-lever, said type carrier is moved to the printing plane, and thereafter assumes a position away from the printing plane when the key-lever is at the limit of its printing stroke, comprising a sub-lever to which said momentum acquiring means is connected, a sub-lever connected to said key-lever, said sub-levers coöperating to transmit increasing rate of movement to the first mentioned sub-lever on printing actuation of said key-lever, and a momentum acquiring device comprising a weight operatively connected to said type carrier so as to initially move toward the printing plane.

48. In a typewriting machine, in combination, a type carrier, a key-lever, a sub-lever operatively connected to said type carrier, a sub-lever operatively connected to said key-lever, said sub-levers coöperating to transmit increasing rate of movement to the first mentioned sub-lever on printing actuation of said key-lever, a weight operatively connected to said first mentioned sub-lever, and means whereby the printing actuation of said key-lever is arrested prior to printing impression, said sub-levers being adapted to operate so as to relieve the type carrier from the direct impulse of said key-lever prior to printing impression.

49. In a typewriting machine, in combination, a type carrier, a key-lever, a sub-lever operatively connected to said type carrier, a sub-lever operatively connected to said

key-lever, said sub-levers coöperating to transmit increasing rate of movement to the first mentioned sub-lever on printing actuation of said key-lever, a weight operatively connected to said first mentioned sub-lever, and means whereby the printing actuation of said key-lever is arrested prior to printing impression, said sub-levers being adapted to operate so as to relieve the type carrier from the direct impulse of said key-lever prior to printing impression and said weight being connected to force the type carrier to printing impression while so relieved.

50. In a typewriting machine, in combination, a type carrier, a key-lever, an escapement, a sub-lever operatively connected to said type carrier, a sub-lever operatively connected to said key-lever, said sub-levers coöperating to transmit increasing rate of movement to the first mentioned sub-lever on printing actuation of said key-lever, a weight operatively connected to said first mentioned sub-lever, means whereby the printing actuation of said key-lever is arrested prior to printing impression, said sub-levers being associated so as to relieve the type carrier from the direct impulse of said key-lever prior to printing impression and said weight being connected to force the type carrier to printing impression while so relieved, and means adapted to actuate said escapement after said key-lever is at the limit of its printing stroke.

51. In a typewriting machine, in combination, a plurality of radially disposed type actions, a member carried by each of said actions, a universal bar extending transversely across the machine and curved to have a uniform relative position beneath each member, a plurality of arms supporting said universal bar and insuring a substantially parallel movement of all parts thereof, a universal rock shaft, some of said first-mentioned arms being connected therewith, and means connected through said universal rock shaft for adjusting the relative position of the universal bar.

52. In a typewriting machine, in combination, a plurality of radially disposed type actions, a member carried by each of said actions, a universal bar extending transversely across the machine and curved to have a uniform relative position beneath each member, a plurality of arms supporting said universal bar and insuring a substantially parallel movement of all parts thereof, a universal rock shaft, some of said first-mentioned arms being connected therewith, an escapement mechanism, and intermediate connections between the escapement mechanism and the universal bar.

53. In a typewriting machine, in combination, a plurality of radially disposed type actions, a member carried by each of said actions, a universal bar extending transversely across the machine and curved to have a uniform relative position beneath each member, a plurality of arms supporting said universal bar and insuring a substantially parallel movement of all parts thereof, a universal rock shaft, some of said first-mentioned arms being connected therewith, an escapement mechanism, intermediate connections between the escapement mechanism and the universal bar, and a return spring associated with said intermediate connections.

54. In a typewriting machine, in combination, a plurality of radially disposed type actions, a member carried by each of said actions, a universal bar extending transversely across the machine and curved to have a uniform relative position beneath each member, a plurality of arms supporting said universal bar, a universal rock shaft, some of said first-mentioned arms being connected therewith, an escapement mechanism, intermediate connections between the escapement mechanism and the universal bar, and a return spring coiled about said connections and coacting against a relatively fixed part of the machine at one end thereof.

55. In a typewriting machine, in combination, a plurality of radially disposed type actions, a universal bar extending transversely across the machine and curved to have a uniform relative position with respect to each action, a plurality of arms supporting said universal bar and insuring a substantially parallel forward movement of all parts thereof, a universal rock shaft, some of said first-mentioned arms being connected therewith, a reverse escapement mechanism, intermediate connections between the escapement mechanism and the universal bar, a return spring coiled about said connection and coacting against a relatively fixed part of the machine at one end thereof, and means for adjusting the tension of said spring comprising a self-locking adjusting nut.

56. In a typewriting machine, in combination, a plurality of radially disposed type actions, a curved universal bar extending transversely across the machine and operatively associated with said type actions, a plurality of arms supporting said universal bar, a universal rock shaft, some of said first-mentioned arms being connected therewith, an escapement mechanism, intermediate connections between the escapement mechanism and the universal bar, a return spring coiled about said connection and coacting against a relatively fixed part of the machine at one end thereof, and means for regulating the timing of the escapement mechanism with respect to the movement of the universal rock shaft.

57. In a typewriting machine, in combi-

nation, an escapement mechanism, a movable type carrier, energy-storing means other than said type carrier, an actuating key having a limited movement to effect a storage of energy in said means, and means to convert said stored energy into printing movement of said type carrier and actuation of said mechanism after arrest of movement of said key.

58. In a typewriting machine, in combination, an escapement mechanism, a movable type carrier, energy-storing means other than said type carrier, an actuating key having a limited depression, and operative connecting means between said elements to effect a storage of energy in said energy-storing means upon depression of said key and to convert such stored energy into printing movement of said type carrier and actuation of said mechanism after depression of said key to its limit, said connecting means including a lost motion device between said key and said type carrier and a second lost motion device between said type carrier and said escapement mechanism.

59. In a typewriting machine, in combination, a movable type carrier, an actuating key therefor, and operative connecting means between said elements including two sub-levers having rocking engagement with each other, one of said sub-levers having a pull connection with said key and the other having a thrust connection with said type carrier.

60. In a typewriting machine, in combination, a movable type carrier, an actuating key therefor, operative connecting means between said elements including two sub-levers having rocking engagement with each other and one having a pull connection with said key and the other having a thrust connection with said type carrier, and means to limit movement of said sub-levers successively.

61. In a typewriting machine, in combination, a movable type carrier, an actuating key therefor, operative connecting means between said elements including two pivoted sub-levers having rocking engagement with each other, and means to adjust the axis of rotation of one of said sub-levers relative to the other.

62. In a typewriting machine, in combination, a movable type carrier, an actuating key therefor, operative connecting means between said elements comprising two pivoted sub-levers having rocking engagement with each other and one having a pull connection with said key and the other having a thrust connection with said type carrier, and means to adjust the axis of rotation of said sub-lever having a thrust connection relative to the other.

63. In a typewriting machine, in combination, a movable type carrier, an actuating key therefor, and operative connecting means between said elements comprising two fore and aft extending sub-levers having a rocking contact with each other and one having a pull connection with said key and the other having a thrust connection with said type carrier, the points of contact of said sub-levers during operation assuming a substantially horizontal travel toward the axis of said sub-lever having the thrust connection with said type carrier.

64. In a typewriting machine, in combination, a movable type carrier, an actuating key, and operative connecting means between said elements to insure movement of said type carrier to its printing limit with a gradual reduction of its momentum during the final portion of its travel, said means including two members having rocking engagement with each other during operation of said key.

In testimony whereof I affix my signature, in the presence of two witnesses.

NILS H. ANDERSON.

Witnesses:
JOS. T. LAWTON,
EDWARD A. WILCOX.

448

G. G. GOING.

TYPE WRITING MACHINE.

APPLICATION FILED APR. 6, 1916.

1,282,410. Patented Oct. 22, 1918.

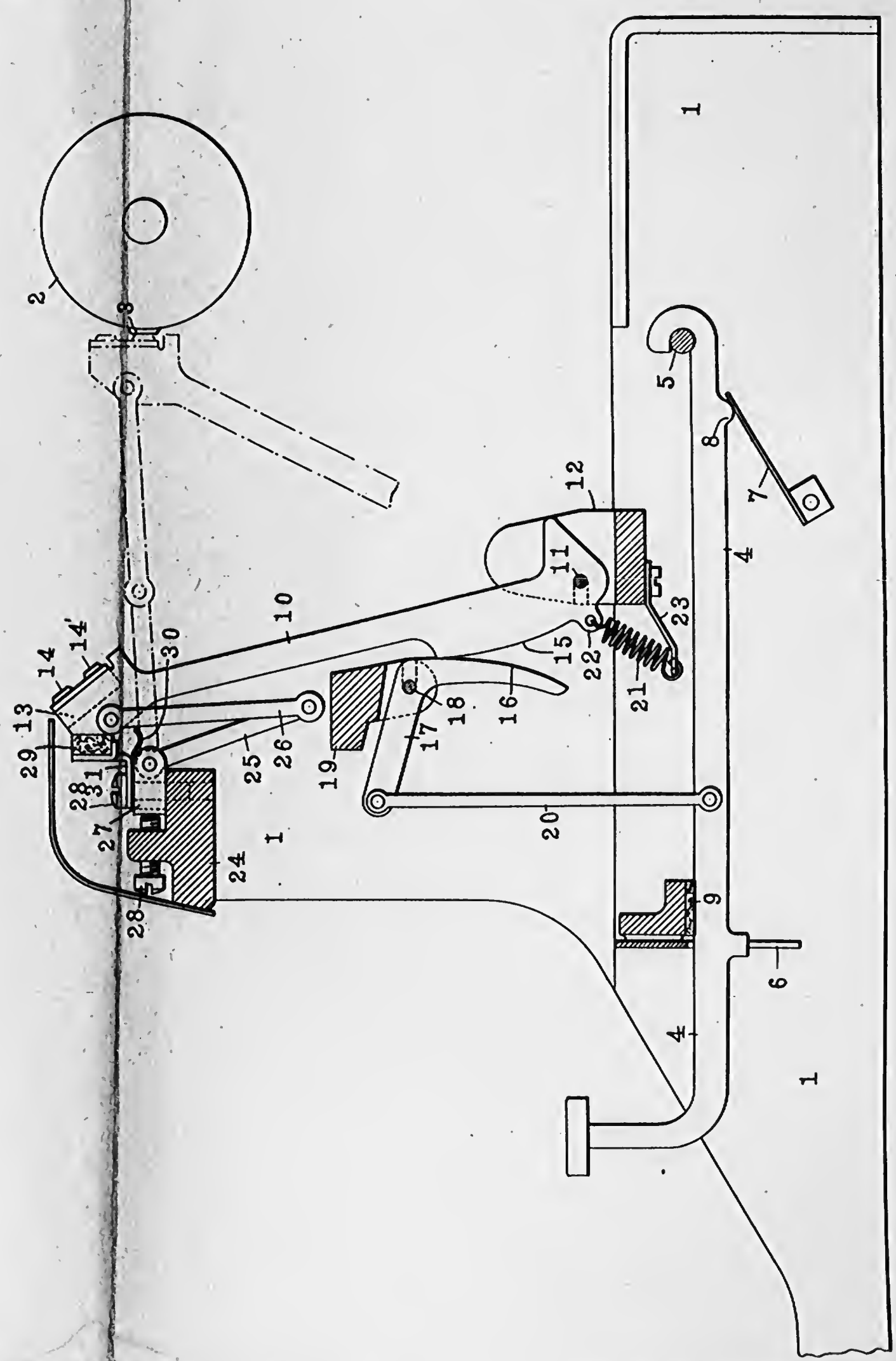

WITNESSES

C. F. Volk

M. A. Meyer.

INVENTOR

G. G. Going

BY

Dull Warfield & Dull

ATTORNEYS

449

UNITED STATES PATENT OFFICE.

GEORGE GOULD GOING, OF MIDDLETOWN, CONNECTICUT, ASSIGNOR TO THE NOISELESS TYPEWRITER COMPANY, OF MIDDLETOWN, CONNECTICUT, A CORPORATION OF CONNECTICUT.

TYPE-WRITING MACHINE.

1,282,410. Specification of Letters Patent. Patented Oct. 22, 1918.

Application filed April 6, 1916. Serial No. 89,262.

To all whom it may concern:

Be it known that I, GEORGE GOULD GOING, a citizen of the United States, residing at Middletown, in the county of Middlesex and State of Connecticut, have invented certain new and useful Improvements in Type-Writing Machines, of which the following is a full, clear, and exact description, such as will enable others skilled in the art to which it appertains to make and use the same.

This invention relates to typewriting machines, and more particularly to improved type actions therefor.

One of the objects of the invention is to provide a simplified and reliable type action adapted to transmit movement from a finger key lever to a type carrier to effect substantially silent printing.

A further object is to provide a practical and efficient train of connections between a key lever and a pivoted type carrier and to associate therewith means independent of the key lever and paper platen to limit printing movement of the type carrier and to permit rapid operation of the machine.

Other objects and advantages will in part be noted hereinafter in connection with the description of the accompanying drawing, which illustrates a typical embodiment of the invention.

The invention accordingly consists in the features of construction, combinations of elements and arrangement of parts which will be exemplified in the construction hereinafter set forth, and the scope of the application of which will be indicated in the following claims.

Referring more particularly to the drawing, there is represented a typewriting machine frame 1, having at its fore part a keyboard and at its upper rear part a paper roll 2, mounted on a traveling carriage adapted for longitudinal line movement and limited vertical shifting to permit different case printing. A flat metal platen 3 is arranged adjacent the platen roll 2 in the horizontal plane of the axis of the latter, and associated mechanism is employed to carry the paper rearward below the roll and upward in advance thereof over the face of the platen in such a manner that the printing is effected on the paper against the platen 3 as a backing. This structure of the paper roll and platen is a characteristic of the Noiseless typewriter, for which the embodiment of the invention shown in the drawing is particularly applicable, although it is to be understood that features of the invention are as well susceptible of use with various other styles of machines.

The finger-key levers 4 are disposed horizontally at the base of the machine and provided with character caps in the key-board, and are pivoted at their rear ends on one or more cross bars 5 or other suitable devices adjacent the rear of the machine. The key levers are guided vertically in a comb member 6 adjacent the keyboard, and leaf springs 7, suitably mounted, are arranged to engage cam lugs 8 adjacent the pivotal axis of the key levers and normally urge the latter to elevated position against a cushioning stop 9 extending across the machine adjacent the comb member 6. The type carriers are disposed radially about a central printing point and each comprises a bar 10 pivoted at its lower end on an axis 11 associated with a segment support 12. The bar 10 carries at its upper end a type piece 13 having preferably two type characters 14 and 14′ for different case printing. The forward lower edges of the type carriers are curved at 15 for engagement by a complementary curved cam edge 16 of the lower arm of a bell crank lever 17 pivoted at 18 on an axis associated with a cross beam 19 of the machine. The fore horizontal arm of the bell crank lever 17 is pivotally connected to a pull wire 20 extending vertically and attached at its lower end to the key lever 4. The type carrier is normally urged to retracted position by a tension spring 21 extended between an offset lug 22 of the type carrier and a bracket arm 23 secured to the segment 12.

There is provided at the fore part of the machine, preferably in horizontal alinement with the platen roll 2, a curved cross brace 24, and a connection therefrom to the free end of the type carrier is employed to limit movement of the latter when actuated to effect printing. This connection, as shown, comprises two links 25 and 26 pivoted together and attached at their ends to the type carrier adjacent the type piece 13 and to a

block 27 mounted for longitudinal adjustment on the cross frame 24. The links 25 and 26 are designed to be straightened as an extended toggle, when the type carrier is moved to print, and the protracted or printing limit of the type carrier is therefore established independently of the platen and the key lever. Such limit, also, may be readily adjusted through the medium of adjusting screws 28 associated with the blocks 27. A cushioning pad 29 is mounted above the cross brace 24, and a leaf spring 30 is clamped between the pad bracket 31 and the block 27, for a purpose described hereinafter. The upper fore corner of the type carrier is preferably beveled to abut flatly with the face of the pad 29.

The position of the parts at rest is that shown in the drawing, the key lever being urged upward by spring 7 and the type carrier being urged away from the platen by spring 21. Upon depression of the key lever to effect printing, movement is transmitted through link 20 and pivoted bell crank lever 17 to the type carrier, the engaging edges of the bell crank lever and type carrier having a rolling or creeping point of contact in such a relation that upon depression of the key lever the speed of the type carrier is progressively increased. As the type carrier swings toward the platen, links 25 and 26 assume straightened position and positively limit the rearward throw of the type at a point sufficient to insure proper impression, but to prevent the type carrier impacting with the paper with a noisy hammer blow. Overthrow of the toggle 25, 26 is prevented by engagement of the link 25 closely adjacent its fixed axis with the leaf spring 30, the latter also tending to insure an immediate breaking of the toggle and return of the type carrier to retracted position.

A suitable escapement mechanism for the traveling carriage is, of course, provided for actuation by a universal bar associated with the key levers, or some moving part in the type action, and by a space bar. The various other conventional features and devices are also, of course, incorporated in the machine.

As many changes could be made in the above construction and many apparently widely different embodiments of this invention could be made without departing from the scope thereof, it is intended that all matter contained in the above description or shown in the accompanying drawings shall be interpreted as illustrative and not in a limiting sense.

Having described my invention, what I claim as new and desire to secure by Letters Patent, is:—

1. In a typewriting machine, in combination, a platen, a pivoted type carrier, a key lever, an operative connection between said type carrier and said lever to move the former to effect printing, and means independent of said connection to limit the printing stroke of said type carrier without impact and substantially independently of said platen.

2. In a typewriting machine, in combination, a platen, a pivoted type carrier, a key lever, an operative connection between said type carrier and said lever to move the former to effect printing, and means independent of said connection to limit the printing stroke of said type carrier without impact and substantially independently of said platen and of said lever.

3. In a typewriting machine, in combination, a platen, a pivoted type carrier mounted to swing to print against said platen but normally urged away from the latter, a rigid member arranged on the side of said type carrier away from said platen, a connection between said member and said type carrier to limit movement of the latter toward said platen, and means independent of said connection to actuate said type carrier to print.

4. In a typewriting machine, in combination, a platen, a pivoted type carrier mounted to swing toward said platen but normally urged away from the latter, a rigid member arranged on the side of said type carrier away from said platen, a toggle connection between said member and said type carrier which, when straightened, limits movement of the latter toward said platen, and operating means to move said type carrier to print independently of said connection.

5. In a typewriting machine, in combination, a platen, a pivoted type carrier, means comprising a toggle having one member attached to said type carrier adjacent its free end for limiting movement thereof toward said platen, and operating means including a member to transmit force to said type carrier adjacent its axis of motion.

6. In a typewriting machine, in combination, a platen, a pivoted type carrier, means including a toggle to limit the printing stroke of said type carrier substantially independently of said platen, and resilient means, comprising a leaf spring normally out of engagement with the links of said toggle, associated for contact with said toggle to prevent overthrow of the latter.

7. In a typewriting machine, in combination, a platen, a pivoted type carrier, a key lever, an operative connection between said type carrier and said lever including a member to transmit force from the latter to the former adjacent its axis of motion, and a toggle including a link attached to said type carrier adjacent its free end, said toggle when straightened determining the limit of the printing stroke of said type carrier.

8. In a typewriting machine, in combination, a platen, a pivoted type carrier, a rigid

member on the side of said type carrier away from said platen, a toggle device comprising pivotally connected links attached to said type carrier and said member, said links when extended being disposed substantially horizontally, means to permit adjustment of said device for varying the printing stroke of said type carrier, and operating means for said type carrier independent of said device.

9. In a typewriting machine, in combination, a platen, a pivoted type carrier movable thereagainst to print, a key lever, a bell crank lever having its axis of motion in a horizontal plane above the axis of said type carrier and having a depending rearward moving arm in rocking contact with the latter, a vertically disposed pull wire connecting the other arm of said bell crank lever with said key lever, and resilient means coactive with said carrier adjacent its axis tending to urge the same away from said platen.

10. In a typewriting machine, in combination, a platen, a rigid type carrier, a key lever, an operative connection between said type carrier and said lever to move the former to effect printing, and means independent of said connection and of said platen to positively limit the printing stroke of said type carrier.

11. In a typewriting machine, in combination, a platen, a rigid type carrier, a key lever, an operative connection between said type carrier and said lever to move the former to effect printing, and a toggle having one link connected to a stationary part and independent of said connection to limit the printing stroke of said type carrier.

12. In a typewriting machine, the combination set forth in claim 11 further constructed and arranged so that said toggle when straightened extends substantially parallel to the direction of the final movement of the type to print.

13. In a typewriting machine, in combination, a platen, a rigid, pivoted type carrier, a key lever, an operative connection between said type carrier and said key lever to move the former to effect printing, and means comprising a toggle independent of said connection to limit the printing stroke of said type carrier.

14. In a typewriting machine, in combination, a platen, a pivoted type carrier, a key lever, an operative connection between said lever and said type carrier adjacent the axis of motion of the latter, and means independent of said connection pivoted to said type carrier adjacent its free end for limiting movement thereof toward said platen.

15. In a typewriting machine, a platen, a rigid, pivoted type carrier, a key lever, an operative connection between said type carrier and said lever, and a toggle independent of said connection having one link pivoted to a stationary part and another link pivoted to said type carrier and arranged so that the links when straightened extend at substantially right angles to said type carrier.

16. In a typewriting machine, a type action including, in combination, a pivoted type carrier normally disposed in retracted position and adapted to swing toward the platen to effect printing, a key lever, an operative train of connection between said lever and carrier to swing the latter at accelerating speed toward the platen, and a toggle connected to said carrier and movable by the latter to extended position for silently limiting the movement of said carrier toward the platen.

17. In a typewriting machine, a type action including, in combination, a pivoted type carrier normally disposed in retracted position and adapted to swing toward the platen to effect printing, a key lever, an operative train of connection between said lever and carrier to swing the latter at accelerating speed toward the platen and permit return movement of said lever independently of said carrier, and a toggle connected to said carrier and movable by the latter to extended position for silently limiting the movement of said carrier toward the platen.

In testimony whereof I affix my signature, in the presence of two witnesses.

GEORGE GOULD GOING.

Witnesses:

D. B. WESTIN,

ERENA K. ALLEN.

G. G. GOING.

TYPE WRITING MACHINE.

APPLICATION FILED MAY 25, 1817.

1,289,731. Patented Dec. 31, 1918.

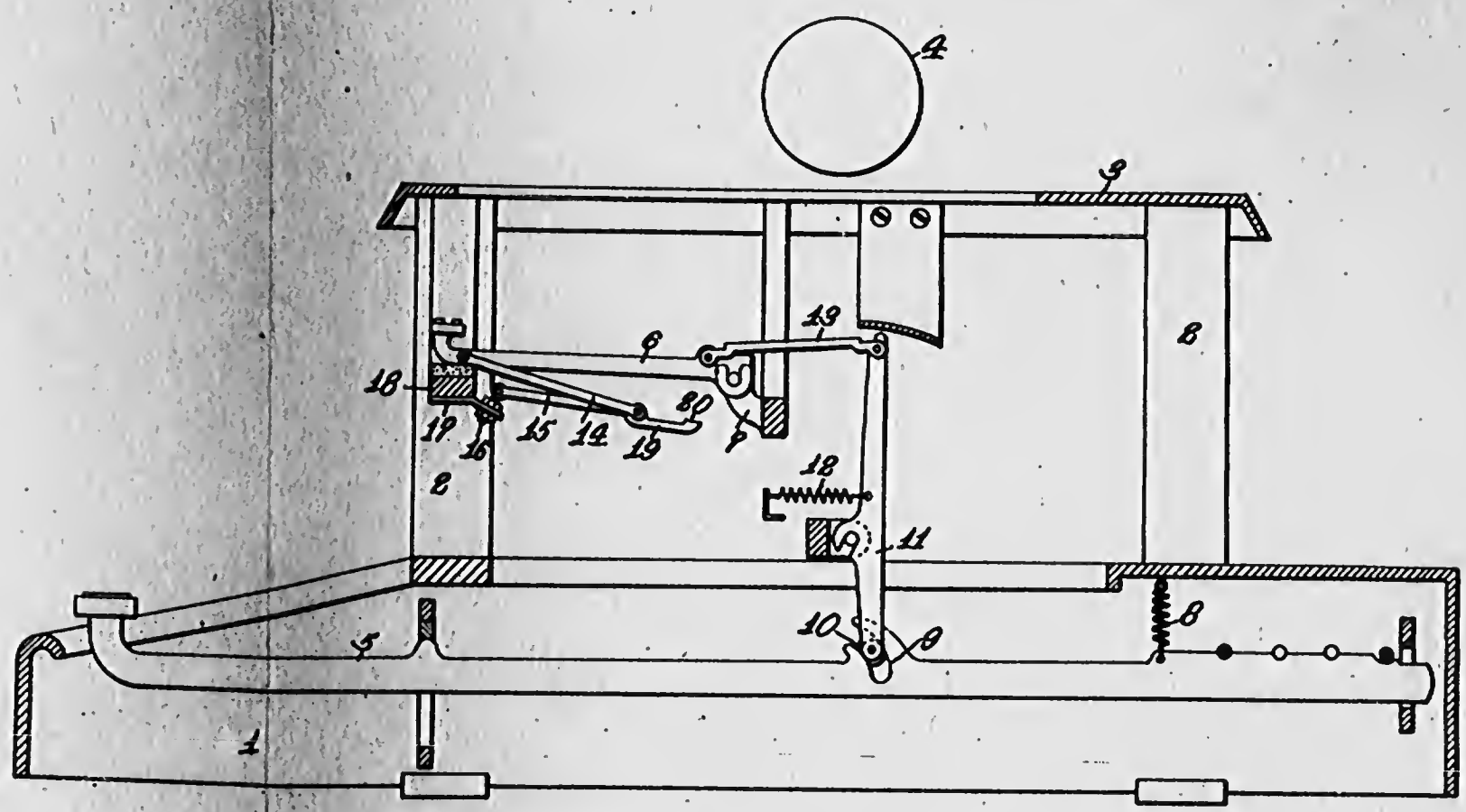

Fig. 1.

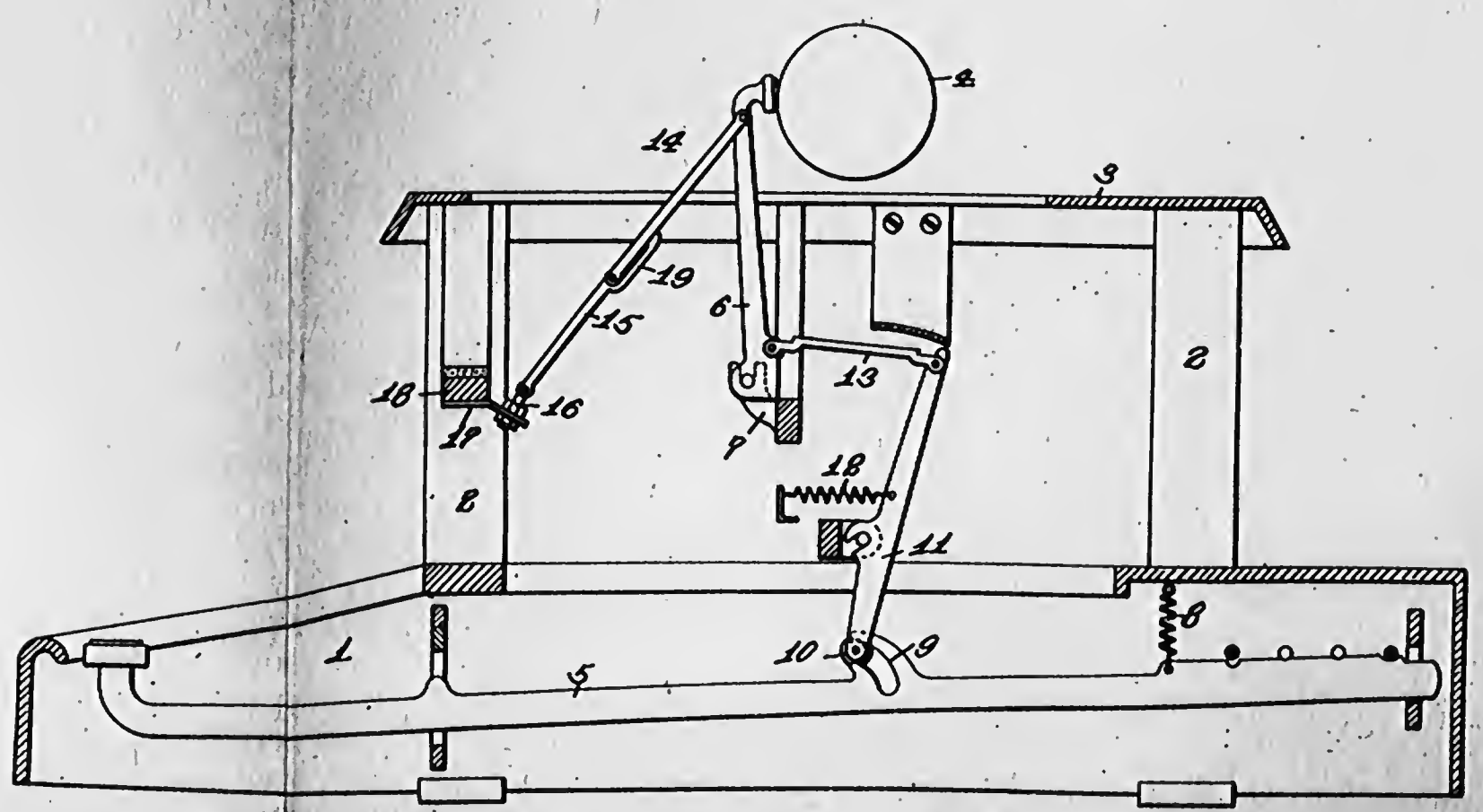

Fig. 2.

INVENTOR

G. G. Going

BY

Dull, Warfield & Dull

ATTORNEY

UNITED STATES PATENT OFFICE.

GEORGE G. GOING, OF MIDDLETOWN, CONNECTICUT, ASSIGNOR TO THE NOISELESS TYPEWRITER COMPANY, OF MIDDLETOWN, CONNECTICUT, A CORPORATION OF CONNECTICUT.

TYPE-WRITING MACHINE.

1,289,731. Specification of Letters Patent. Patented Dec. 31, 1918.

Application filed May 25, 1917. Serial No. 170,860.

To all whom it may concern:

Be it known that I, GEORGE GOULD GOING, a citizen of the United States, residing at Middletown, in the county of Middlesex and State of Conn., have invented certain new and useful Improvements in Type-Writing Machines, of which the following is a full, clear, and exact description, such as will enable others skilled in the art to which it appertains to make and use the same.

This invention relates to typewriting machines, and more particularly to improved type actions thereof.

One of the objects of the invention is to provide simple and practical means, applicable to various styles of typewriters, for materially reducing the noise of impact of a type carrier when impelled to effect printing.

A further object is to provide devices, comprising few parts and capable of cheap manufacture, for limiting the printing strokes of the type carriers substantially independently of the platen.

The subject-matter shown and claimed in the present application includes features disclosed and claimed more broadly in the present applicant's co-pending application filed April 6, 1916, Serial No. 89,262 and allowed March 26, 1918. The present improvement is directed more particularly to the means for preventing overthrow of a type bar restraining toggle, as hereinafter set forth, while the earlier filed application is directed more broadly to the combination in which the type bars are restrained in their movement toward the platen by means independent of the connection between the key levers and type bars and through which movement of the latter toward the platen is initiated.

Other objects and advantages will be in part noted hereinafter in connection with the following description of the accompanying drawing, which illustrates a typical embodiment of the invention, and in which—

Figure 1 is a side view of certain of the typewriter parts, and showing one type action; and

Fig. 2 is a similar view, showing the parts in printing position.

In the structure illustrated, the typewriter frame includes a base 1, upright standards 2 and a top plate 3. A platen roll 4, arranged on a suitable carriage, is positioned above the frame and arranged, by any of the suitable well-known constructions, for letter-spacing travel and vertical case-shifting. The other common accessory features of the machine, such as ribbon feeding mechanism, carriage release, etc., are, of course, present.

The type actions comprise a bank of key levers 5 pivoted at the rear of the machine and each connected by a train of levers to actuate type carriers 6 pivoted on a supporting segment 7. Each key lever 5 is normally urged upward to Fig. 1 position by a coil spring 8 and thereby, through the medium of a cam slot 9 and roller 10 fixed in the lower end of a rocking lever 11, allows said lever to assume vertical position aided by a return spring 12. A short link 13 is pivoted to the upper end of lever 11 and to the pivoted type bar 6 adjacent the axis of the latter. The construction described is such that, on depression of the key lever, the cam edge of the slot 9 forces the lever 11 to swing clockwise and thereby swing the type carrier against the platen to effect printing. By proper design of the cam slot the action may insure acceleration of the type bar in its movement to combine the desirable features of easy touch and quick action.

For the purposes of this invention there is also provided a connection between the type bar and a stationary part of the machine operative to control the printing limit when the type bar is swung to impression. As shown, a pair of pivotally connected links 14 and 15 are respectively pivoted to the type bar adjacent the type head and to an adjustable bolt 16 rigidly mounted on plate 17, in turn fixed to the type bar rest segment 18. The links mentioned, it will be noted, are not included in the power transmitting connection between the type bar and the key lever, but act in the manner of a toggle when the key lever is depressed to assume extended position, and thereby positively limit the forward swing of the type bar without impact between relatively moving parts. Furthermore, due to the convenient and accurate capability of adjustment of the bolt 16, the toggle links may be readily positioned to, in operation, stop the type bar at a point after the printing is effected but before the expenditure of its momentum by abrupt impact against the platen backing. The link 15 is also provided with an extended portion 19 having an overturned or offset extremity

454

20 disposed to engage the link 14 when the toggle is extended. The portion 19 preferably possesses slight resiliency, so that as the toggle links swing to extension, overthrow of the latter is prevented and at the same time slight spring is imparted to the portion 19, whereby an immediate breakage of the toggle joint is insured and initial return impulse imparted to the type bar. For the latter function it will be noted that the offset extremity 20 of the extension 19 would be disposed in a plane such that its engagement by the link 14 is effected slightly in advance of the complete extension of the toggle links.

It will be noted that the normal horizontal disposition of the type bars 6 in their retracted positions allows a maximum arc for the basket pad 18 below the type heads and therefore gives room to accommodate a full set of type bars and also allows a 90 degree swing of the latter to accelerate in their movement to print. At the same time the disposition and arrangement of the toggle links 14, 15 renders the type action free while operating effectively to limit the throw of the type bars.

As many changes could be made in the above construction and many apparently widely different embodiments of this invention could be made without departing from the scope thereof, it is intended that all matter contained in the above description or shown in the accompanying drawing shall be interpreted as illustrative and not in a limiting sense.

It is also to be understood that the language used in the following claims is intended to cover all of the generic and specific features of the invention herein described and all statements of the scope of the invention, which, as a matter of language, might be said to fall therebetween.

Having described my invention, what I claim as new and desire to secure by Letters Patent is:

1. In a typewriting machine, in combination, a platen; a type bar pivotally mounted therebelow, normally disposed in recumbent substantially horizontal position and free to swing through substantially 90 degrees to effect printing; operating means, including a key lever, to swing said type bar; and toggle links pivoted to said type bar and to a stationary part of the machine and acting when extended to determine the printing stroke of said type bar; said links when folded being disposed below and substantially parallel with said type bar, and when extended being disposed at substantially a 45 degree angle thereto.

2. In a typewriting machine, in combination, a platen, a pivoted type bar, a key lever, an operative connection between said type bar and said key lever for imparting movement to the former from the latter to effect printing, toggle links pivoted to said type bar and a stationary part of the machine and acting, when extended, to limit the printing stroke of said type bar substantially independently of said platen, and means carried by said links to prevent overthrow thereof.

3. In a typewriting machine, in combination, a platen, a pivoted type bar, a key lever, an operative connection between said type bar and said key lever for imparting movement to the former from the latter to effect printing, toggle links pivoted to said type bar and a stationary part of the machine and acting, when extended, to limit the printing stroke of said type bar substantially independently of said platen, and means carried by said links to prevent overthrow thereof and to impart initial return movement to said type bar.

4. In a typewriting machine, in combination, a type action including a pivoted type bar, means comprising a pair of pivotally connected links with extremities pivoted to said type bar adjacent its free end and to a stationary part of the machine for limiting the printing stroke of said type bar, and an element carried by one of said links and positioned for engagement with the other when said links approach extended position.

5. In a typewriting machine, in combination, a platen, a type action including a pivoted type bar, a link pivoted to said type bar adjacent its free end, a link pivoted to a stationary part of the machine, said links being pivoted together as a toggle, and a resilient extension on one of said links having a portion for engagement with the other link when said links are extended to prevent overthrow thereof and to effect breakage of the toggle joint.

In testimony whereof I affix my signature.

G. G. GOING.

455

N. H. ANDERSON.

TYPE WRITING MACHINE.

APPLICATION FILED OCT. 8, 1909.

1,312,820.

Patented Aug. 12, 1919.

11 SHEETS—SHEET 1.

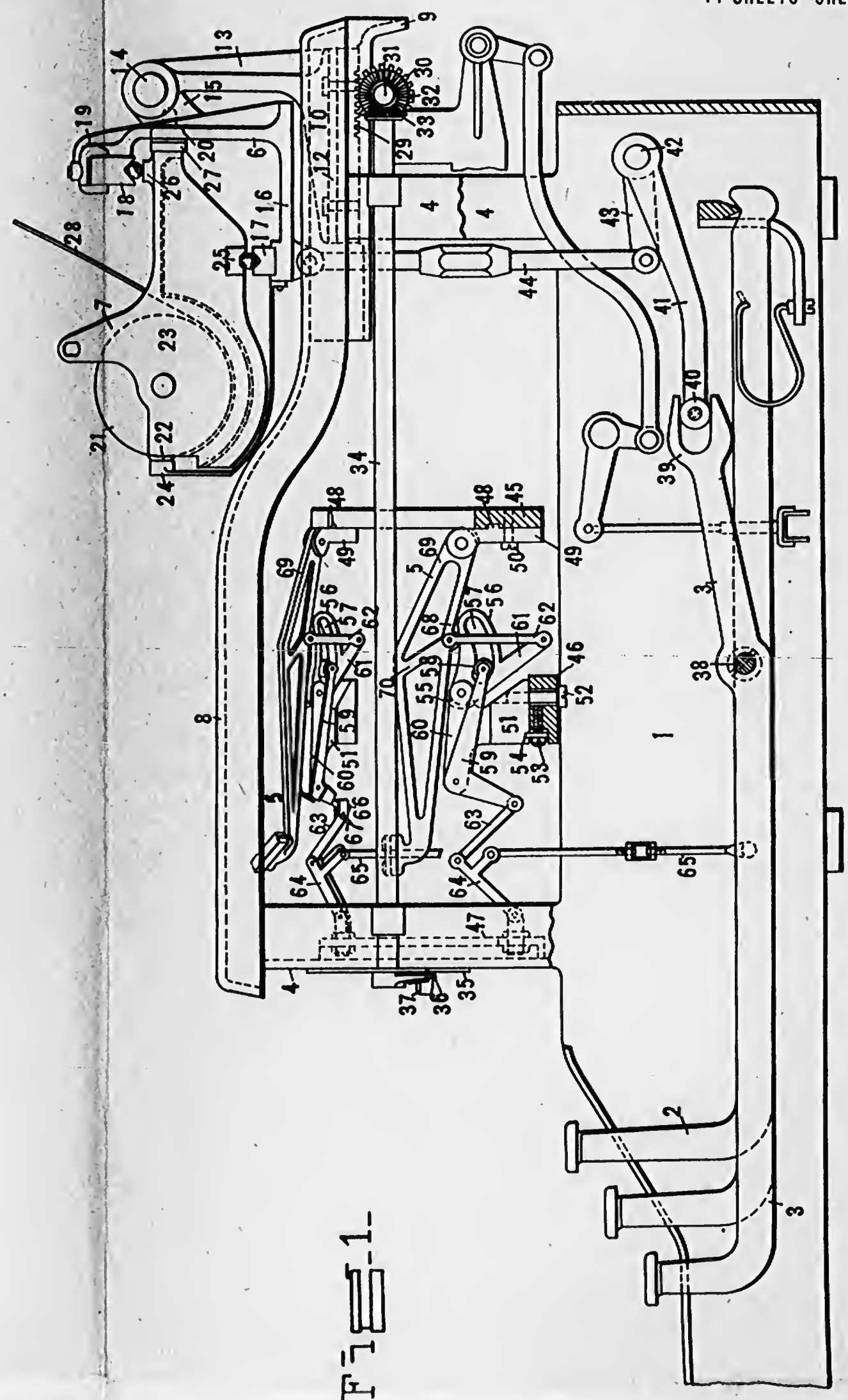

FIG. 1.

WITNESSES

Norris Perry

Wm H Brown

INVENTOR

N. H. Anderson

BY

Duell, Wayfield & Duell

ATTORNEYS

456

N. H. ANDERSON.

TYPE WRITING MACHINE.

APPLICATION FILED OCT. 8, 1909.

1,312,820.

Patented Aug. 12, 1919.

11 SHEETS—SHEET 2.

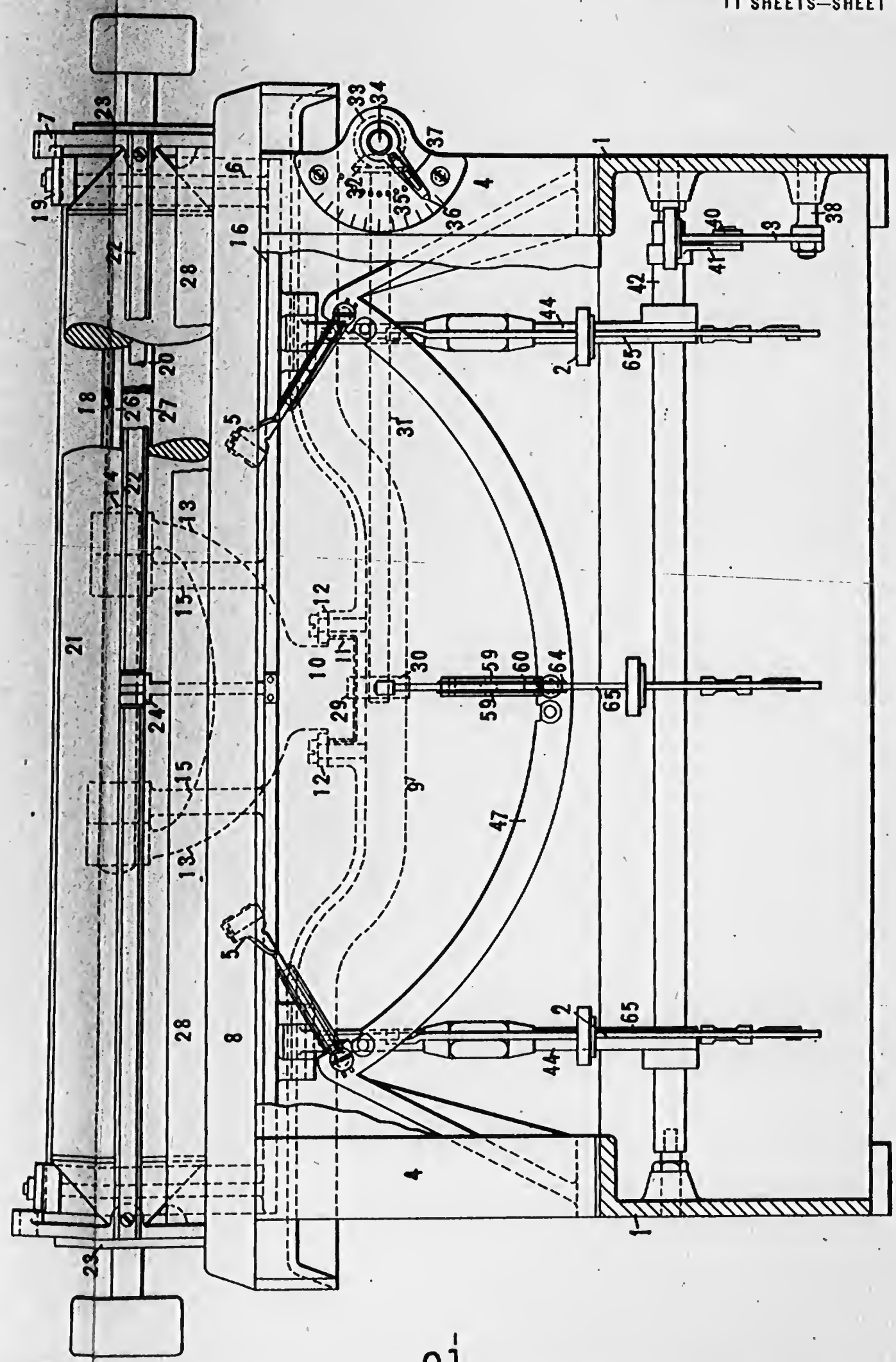

Fig. 2.

WITNESSES

Norris Rice

Wm H Brown

INVENTOR

N. H. Anderson.

BY

Duell, Wayfield Duell

ATTORNEYS

N. H. ANDERSON.
TYPE WRITING MACHINE.
APPLICATION FILED OCT. 8, 1909.

1,312,820.

Patented Aug. 12, 1919.
11 SHEETS—SHEET 3.

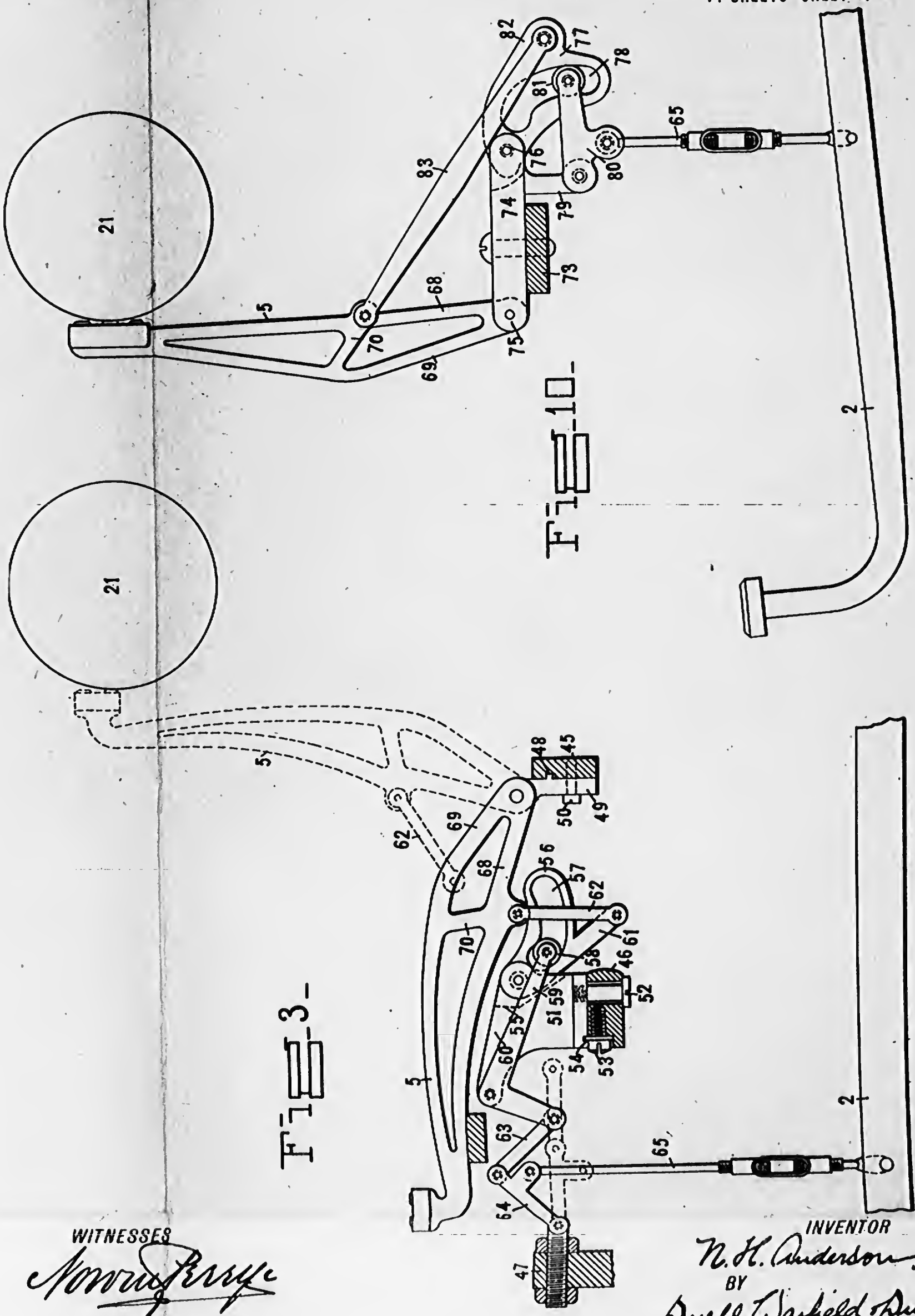

FIG. 10.

FIG. 3.

WITNESSES
Norris Bryce
Wm H Brown

INVENTOR
N. H. Anderson
BY
Duell, Wayfield & Duell
ATTORNEYS

458

N. H. ANDERSON.

TYPE WRITING MACHINE.

APPLICATION FILED OCT. 8, 1909.

1,312,820. Patented Aug. 12, 1919.

11 SHEETS—SHEET 4.

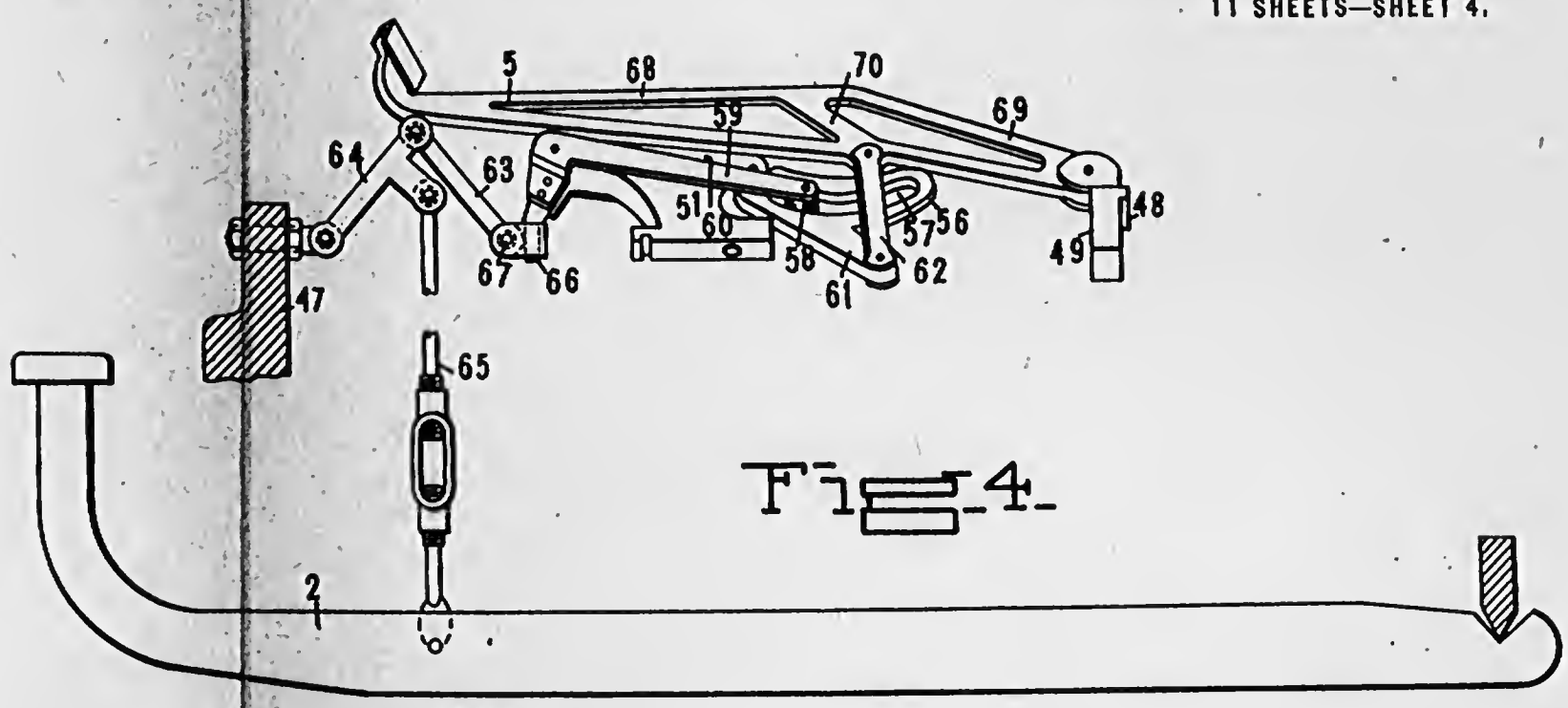

Fig. 4.

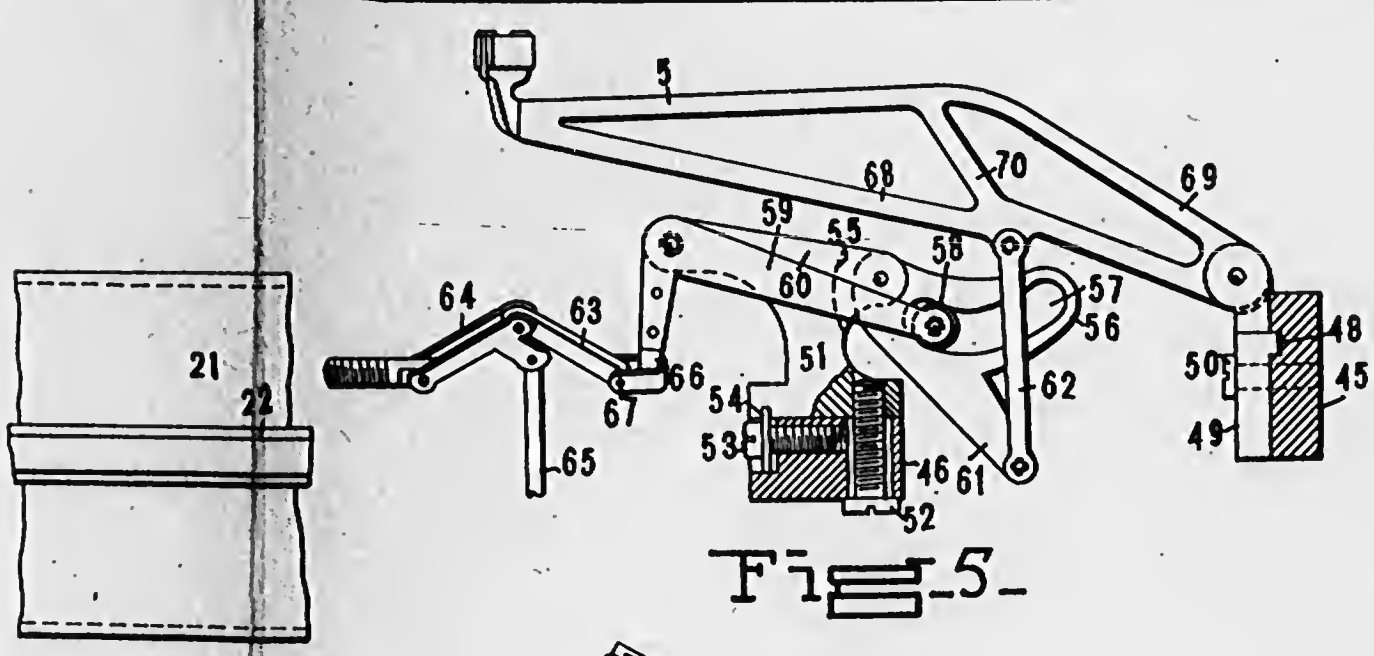

Fig. 5.

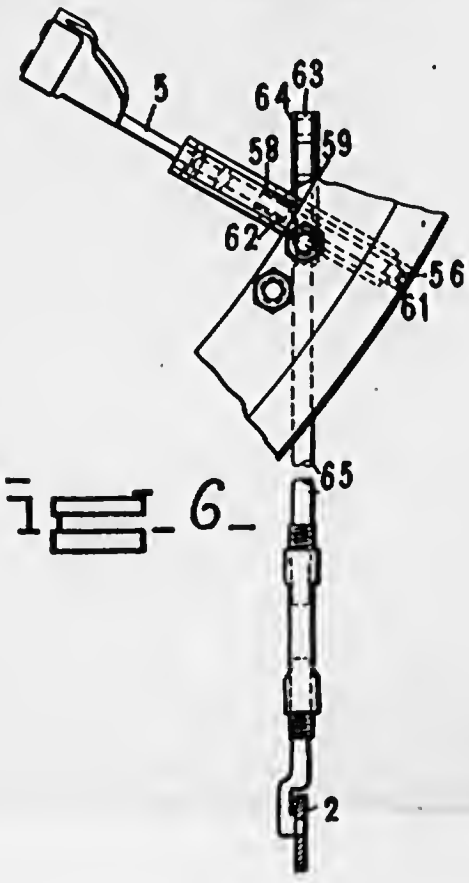

Fig. 6.

WITNESSES

Norman Rupp

Wm H Brown

INVENTOR

N. H. Anderson

BY

Duell, Wayfield & Duell

ATTORNEYS

459

N. H. ANDERSON.

TYPE WRITING MACHINE.

APPLICATION FILED OCT. 8, 1909.

1,312,820.

Patented Aug. 12, 1919.

11 SHEETS—SHEET 5.

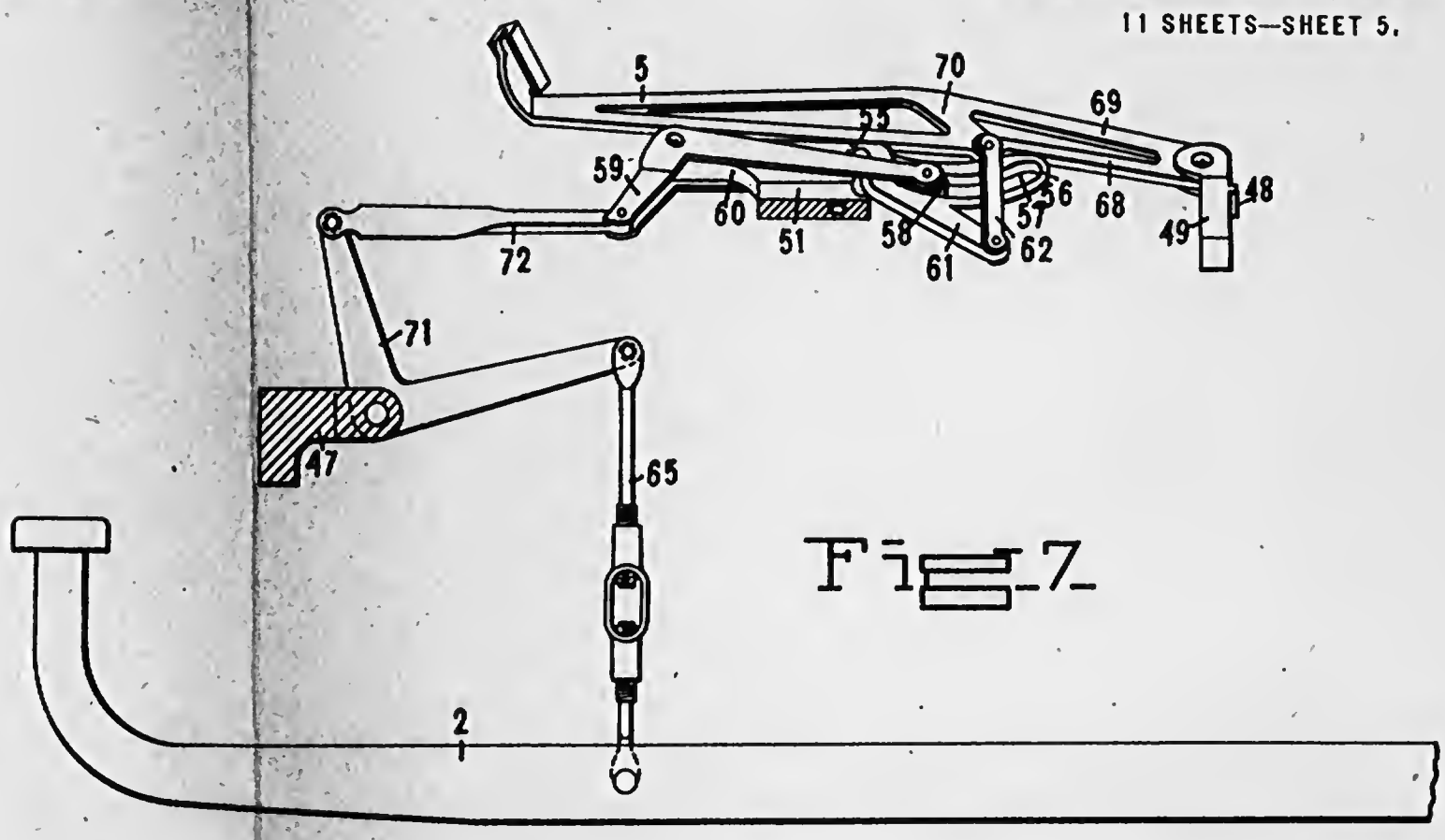

Fig. 7.

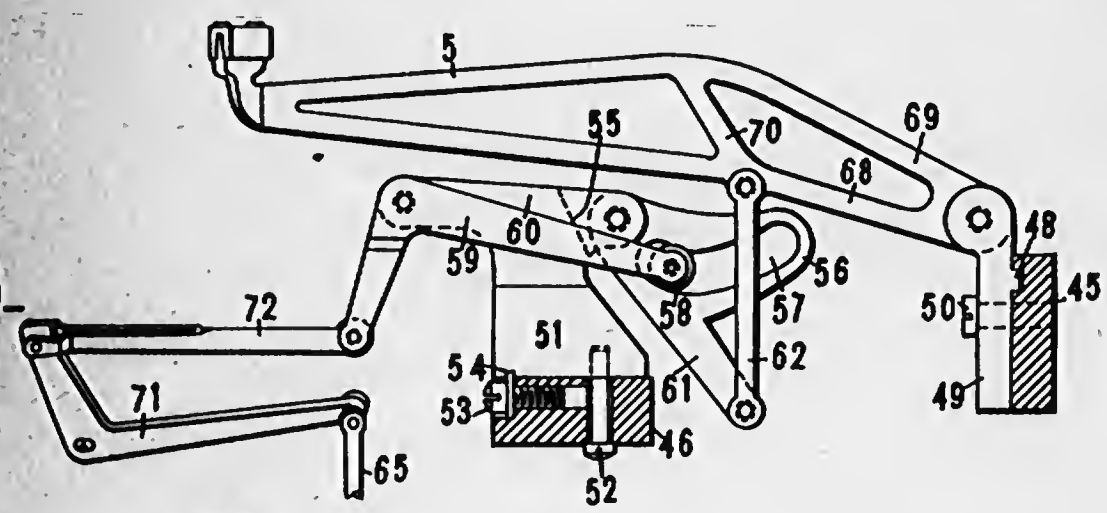

Fig. 8.

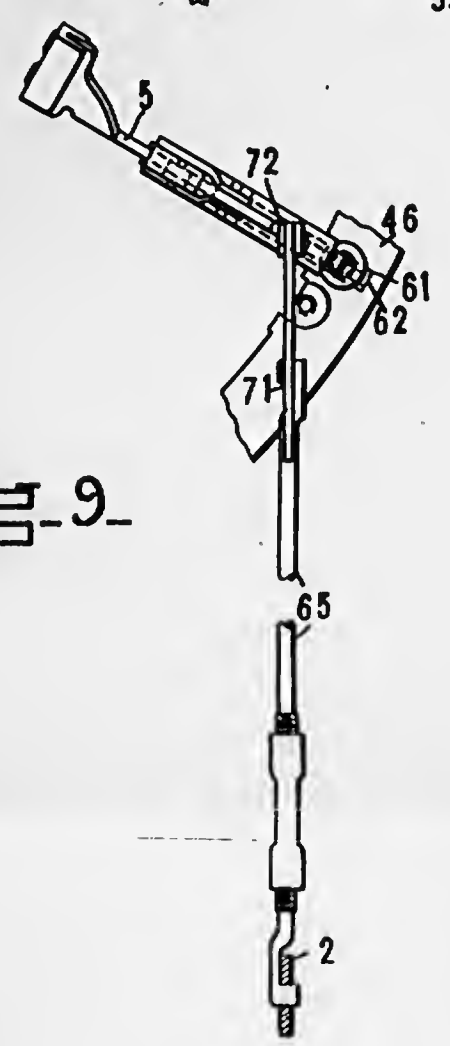

Fig. 9.

WITNESSES

Norris Perry

Wm. H. Brown

INVENTOR

N. H. Anderson

BY

Duell, Warfield & Duell

ATTORNEYS

460

N. H. ANDERSON.

TYPE WRITING MACHINE.

APPLICATION FILED OCT. 8, 1909.

1,312,820.

Patented Aug. 12, 1919.

11 SHEETS—SHEET 6.

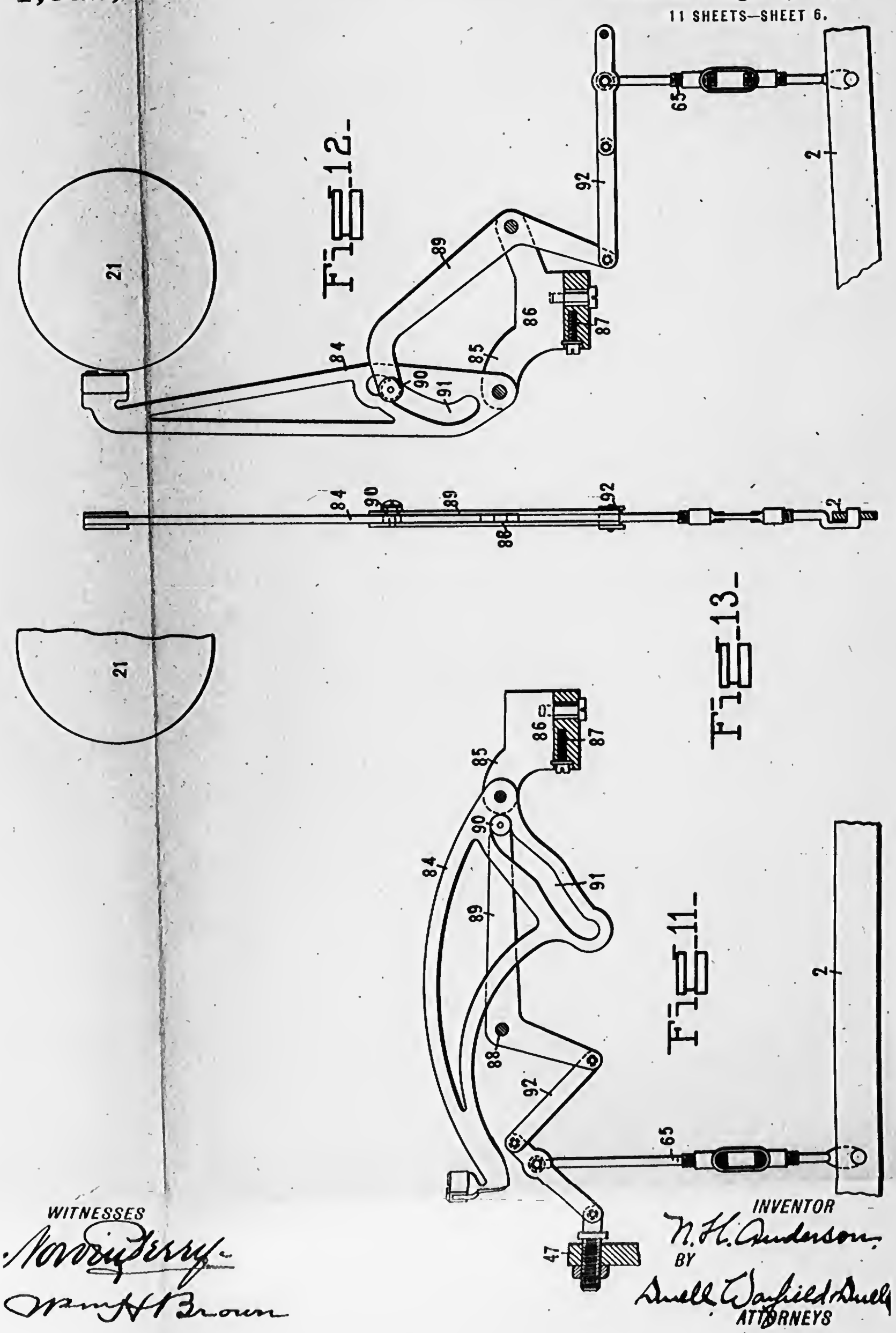

FIG. 12.

FIG. 13.

FIG. 11.

WITNESSES

INVENTOR

N. H. Anderson

BY

Duell, Warfield & Duell

ATTORNEYS

461

N. H. ANDERSON.

TYPE WRITING MACHINE.

APPLICATION FILED OCT. 8, 1909.

1,312,820.

Patented Aug. 12, 1919.

11 SHEETS—SHEET 7.

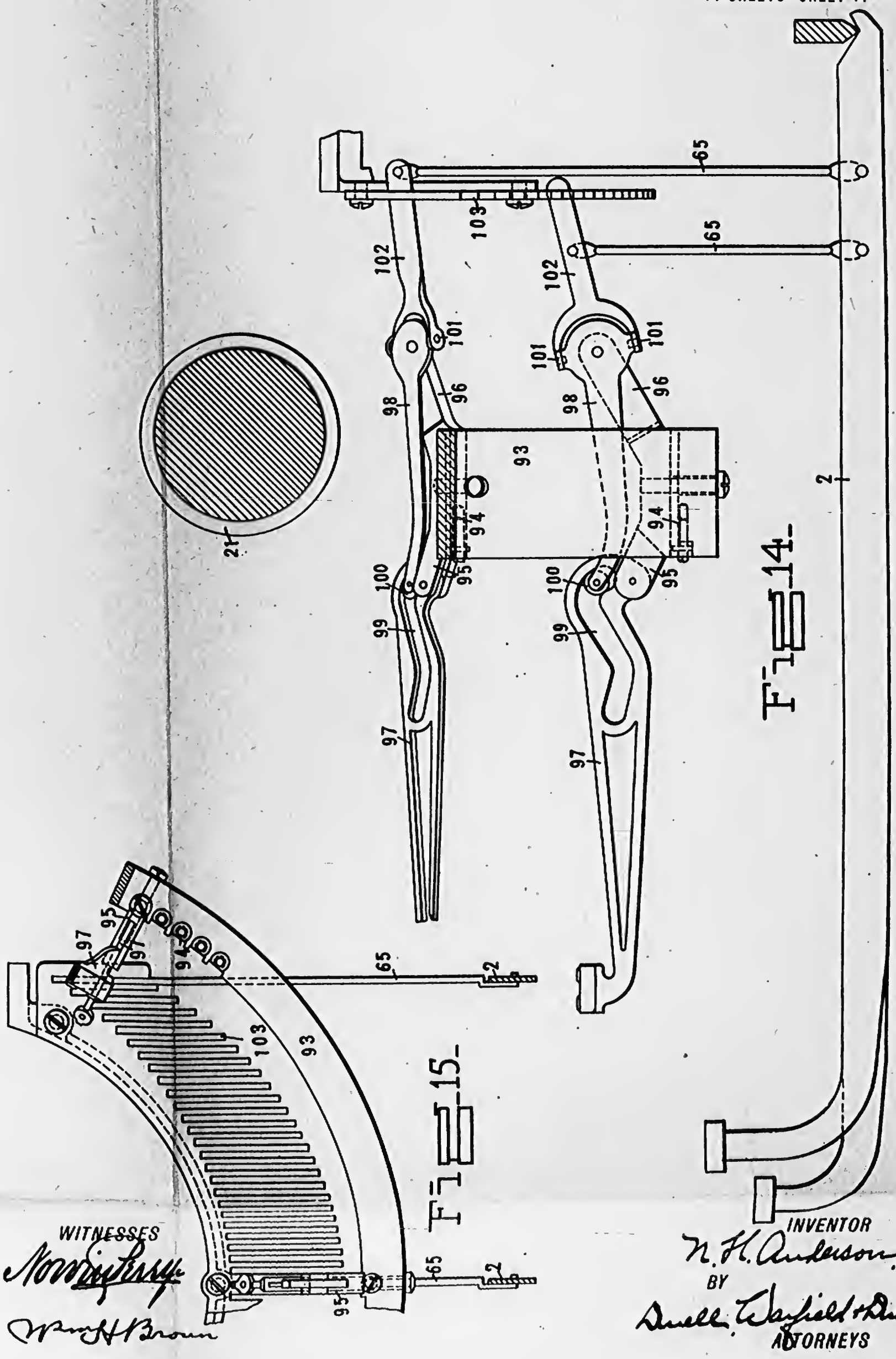

WITNESSES

Norris Perry

Wm. H. Brown

INVENTOR

N. H. Anderson

BY

Duell, Warfield & Duell

ATTORNEYS

N. H. ANDERSON.

TYPE WRITING MACHINE.

APPLICATION FILED OCT. 8, 1909.

1,312,820.

Patented Aug. 12, 1919.

11 SHEETS—SHEET 8.

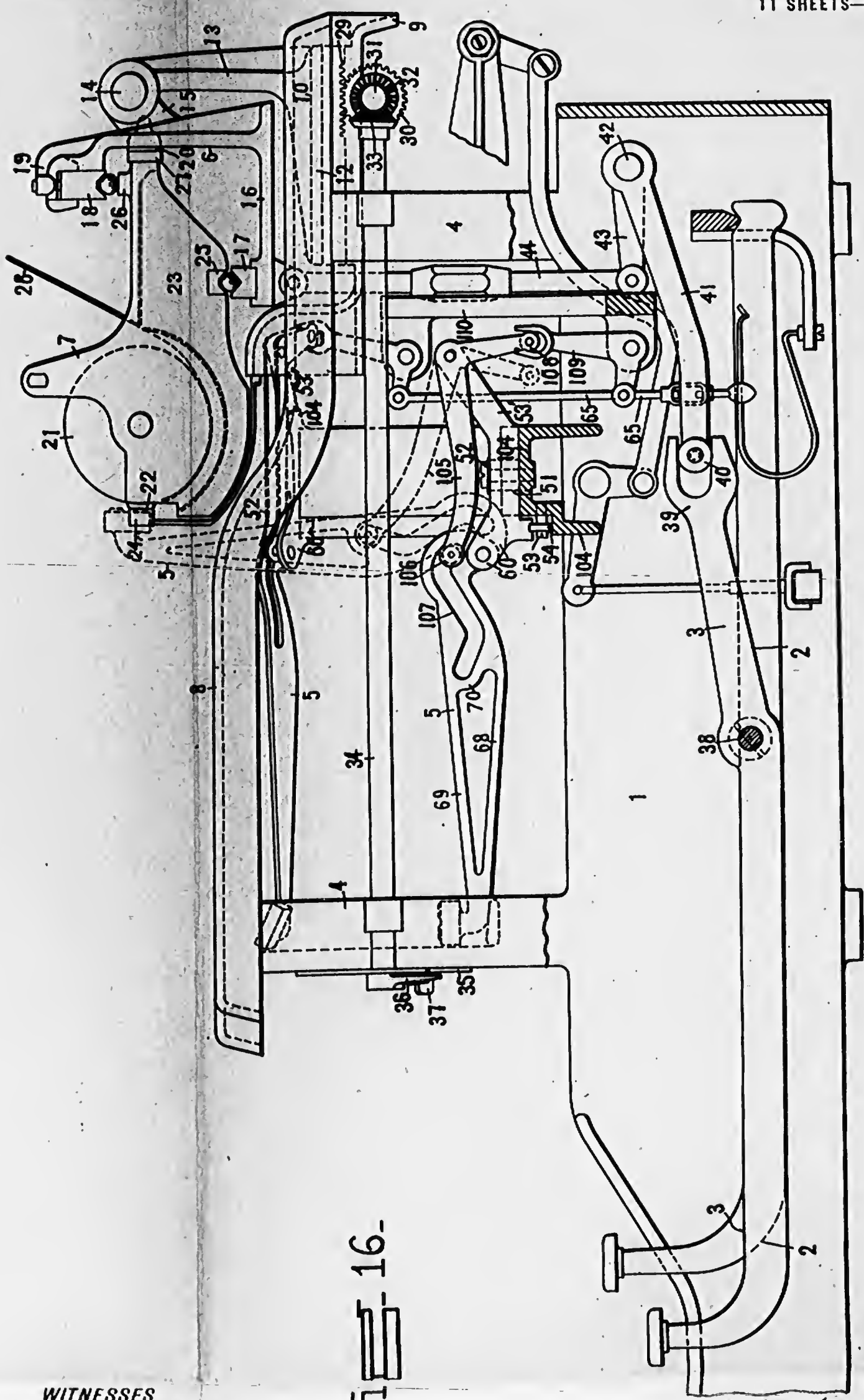

Fig. 16.

WITNESSES

Norris Bryce

Wm H Brown

INVENTOR

N. H. Anderson,

BY

Duell, Warfield & Duell

ATTORNEYS

463

N. H. ANDERSON.

TYPE WRITING MACHINE.

APPLICATION FILED OCT. 8, 1909.

1,312,820. Patented Aug. 12, 1919.

11 SHEETS—SHEET 9.

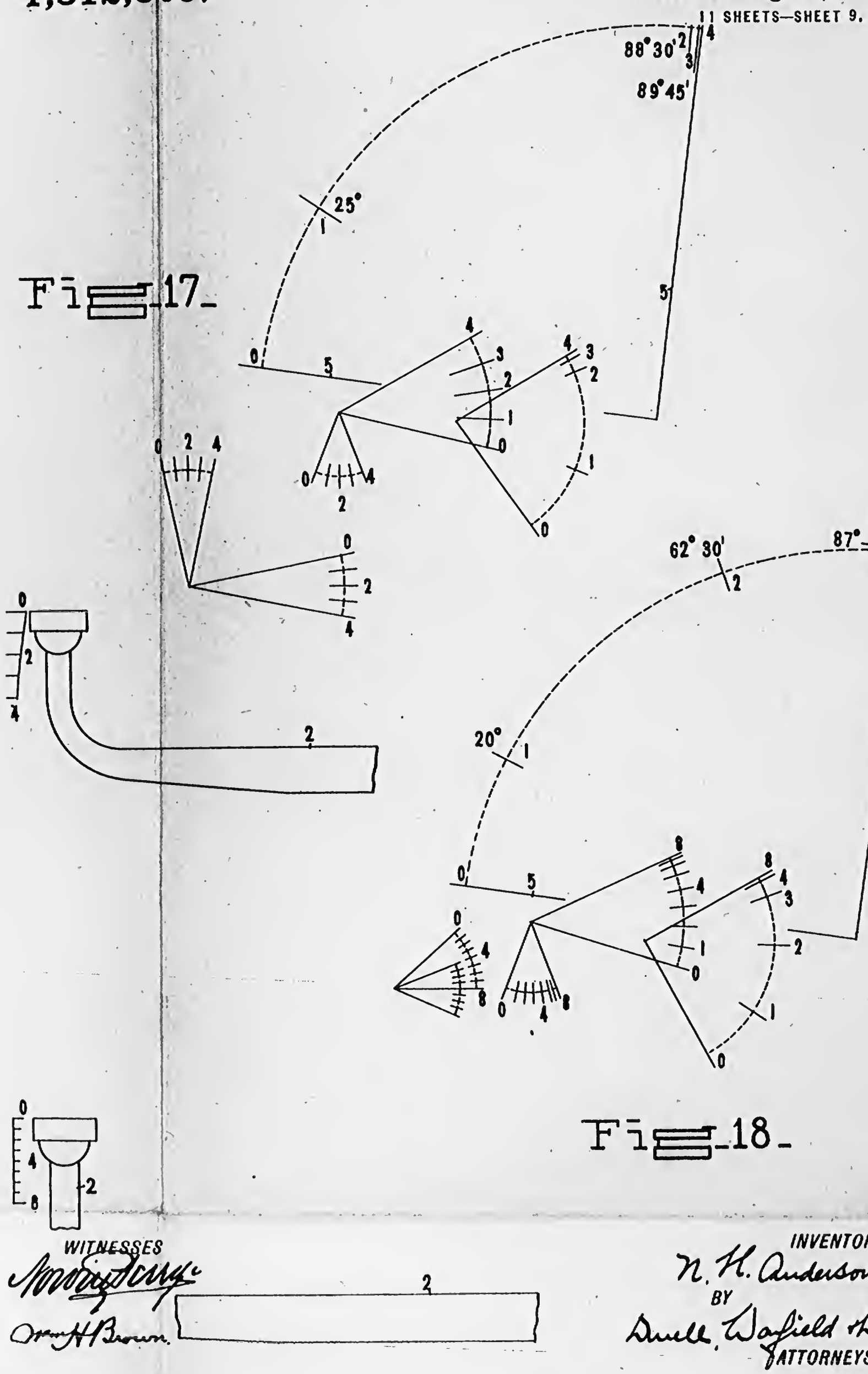

Fig. 17.

Fig. 18.

WITNESSES

Wm. H. Brown.

INVENTOR

N. H. Anderson.

BY

Duell, Wofield & Duell

ATTORNEYS

464

N. H. ANDERSON.

TYPE WRITING MACHINE.

APPLICATION FILED OCT. 8, 1909.

1,312,820.

Patented Aug. 12, 1919.

11 SHEETS—SHEET 10.

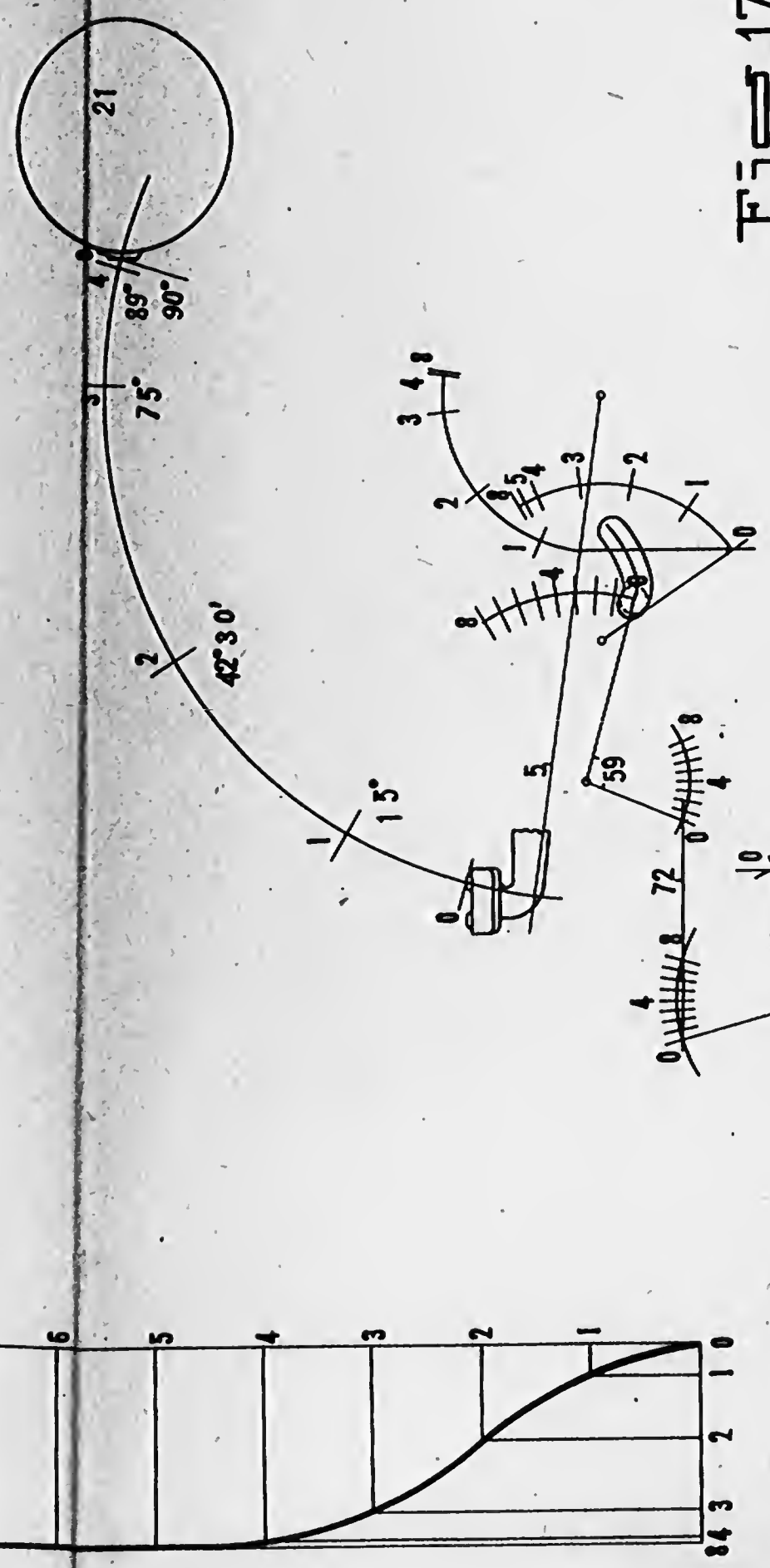

FIG. 17a

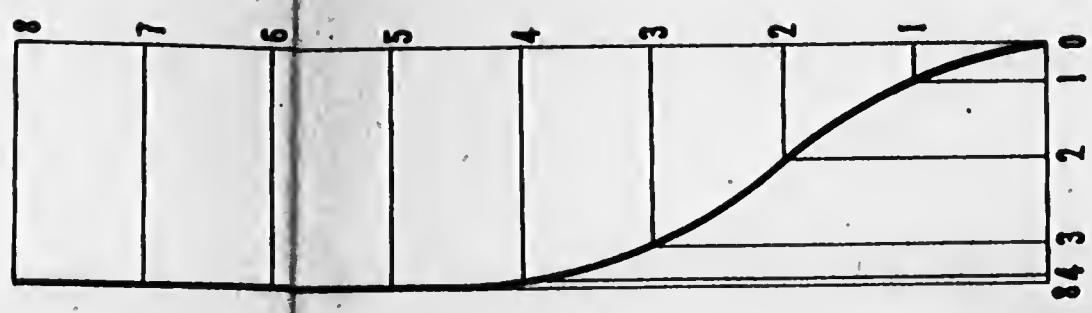

FIG. 17b

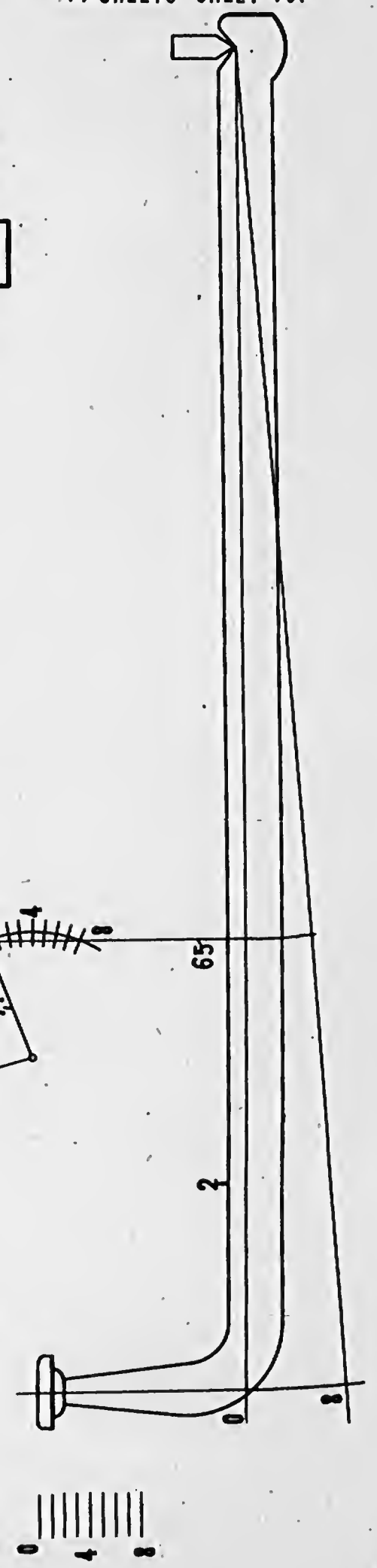

WITNESSES:

Norris Kruse

Wm. H. Brown

INVENTOR

N. H. Anderson

BY

Duell, Mayfield & Duell,

ATTORNEYS

N. H. ANDERSON.
TYPE WRITING MACHINE.
APPLICATION FILED OCT. 8, 1909.

1,312,820.

Patented Aug. 12, 1919.
11 SHEETS—SHEET 11.

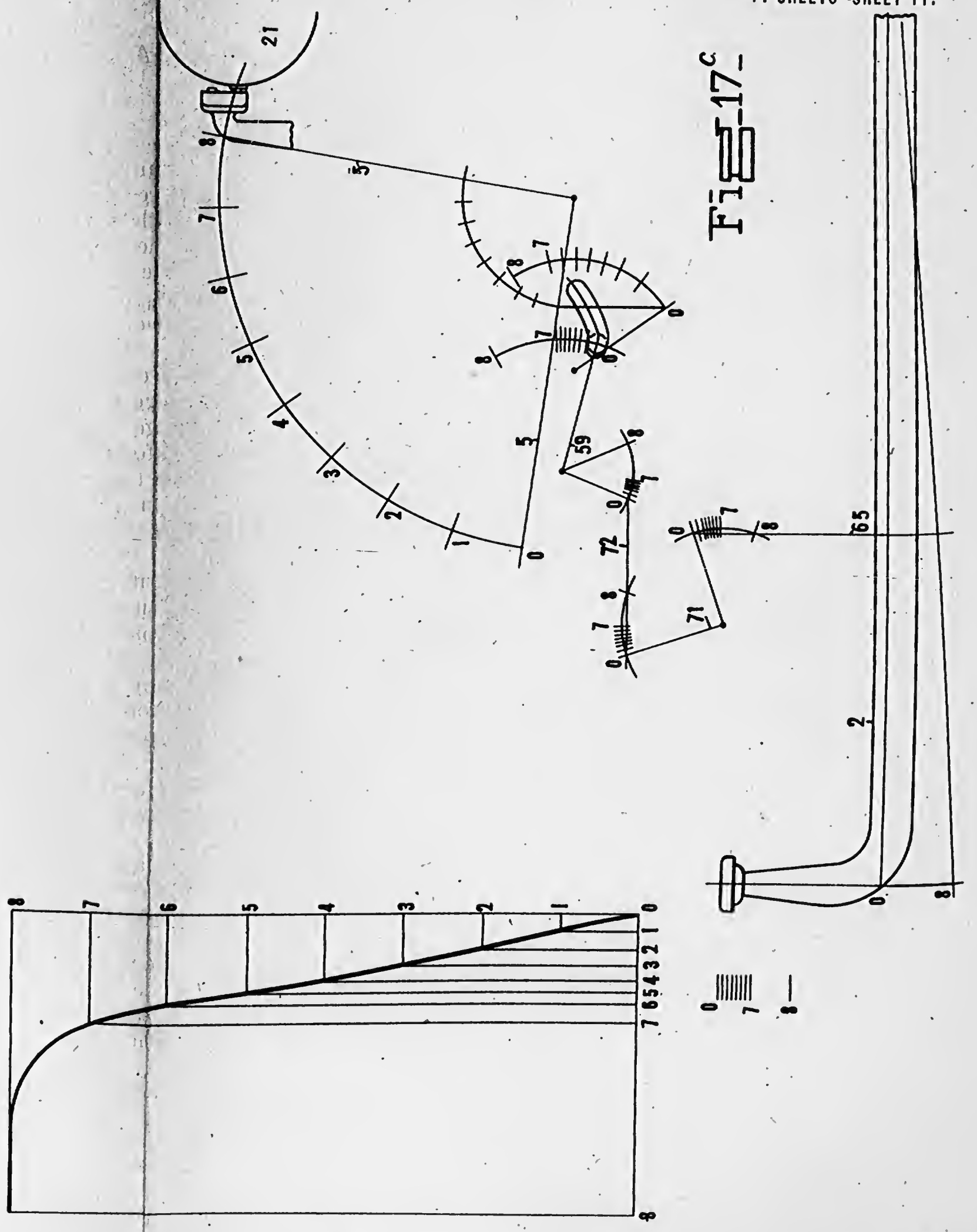

WITNESSES:
Norris Forsyte
Frank H. Brown

INVENTOR
N. H. Anderson
BY
Duell, Warfield & Duell
ATTORNEYS.

UNITED STATES PATENT OFFICE.

NILS H. ANDERSON, OF MIDDLETOWN, CONNECTICUT, ASSIGNOR TO THE NOISELESS TYPEWRITER COMPANY, OF MIDDLETOWN, CONNECTICUT, A CORPORATION OF CONNECTICUT.

TYPE-WRITING MACHINE.

1,312,820. Specification of Letters Patent. Patented Aug. 12, 1919.

Application filed October 8, 1909. Serial No. 521,678.

To all whom it may concern:

Be it known that I, NILS H. ANDERSON, a citizen of the United States, residing at Middletown, in the county of Middlesex and State of Connecticut, have invented certain new and useful Improvements in Type-Writing Machines, of which the following is a full, clear, and exact description, such as will enable others skilled in the art to which it appertains to make and use the same.

This invention relates to typewriting machines and more particularly to an easy running machine having the capacity of enabling typewriting to be effected without producing noise. The invention resides more especially in the improved construction of the type-actuating mechanism of such a machine arranged in that general style known as visible front strike.

In such typewriting machines as have hitherto gained commercial supremacy, a pivoted type-carrier or so-called "type-bar" has been arranged to swing into printing position with a hammer-like action so as to utilize the momentum of the printing head through a sharp blow or impact in obtaining the force necessary to produce the desired impression. A hitherto unavoidable concomitant of this mode of operation has been the exceedingly objectionable and penetrating noise composed of the multiplicity of rapidly recurring sharp clicks or reports obtaining at the instant of printing each character. One of the objects of this invention is to so modify, reconstruct, amplify and otherwise improve the structure of such hitherto known machines as to eliminate the said "printing noise" thereof, while at the same time maintaining or utilizing many, if not all, of the advantages otherwise incidental to swinging front strike type-bars. In carrying out this aspect of my invention I propose to so devise the mechanism that such type-bars will make the imprint quietly and noiselessly for all practical purposes by virtue of a compressive or squeezing action, pure and simple, on the material on the platen, as distinguished from the above described pressures derived in consequence of the noisy transformations of the momentum of a type-bar into an effective printing force.

Another object of this invention is to provide an improved arrangement of the type carriers whereby a greater number of carriers may so co-act with a single shift platen as to possess all the advantages of the double shift with but few, if any, of its present disadvantages.

Another object of the invention is to provide an improved action in which the touch and stroke may be graduated as desired.

Another object of the invention is to provide an improved carriage of the single shift style, having means for adjusting the carriage relatively to the type carriers at the end of their normal stroke, and means for shifting the carriage for upper case type.

Other objects and structural characteristics will be in part obvious from the annexed drawings and in part pointed out hereinafter.

The invention accordingly consists in the features of construction, combinations of elements and arrangement of parts which will be exemplified in the construction hereinafter set forth, and the scope of the application of which will be indicated in the following claims.

In the accompanying drawings are illustrated two of various possible embodiments of the invention in a typewriting machine, as well as several possible modifications of type actions.

Figure 1 represents a side elevation of a typewriting machine, partly in section, illustrating one embodiment of various features of this invention.

Fig. 2 is a front elevation of the same with certain parts broken away or shown in dotted lines for clearness.

Fig. 3 is a side elevation of the central type action, shown in Fig. 1, with the type bar or carrier shown in dotted lines in the printing position, and in full lines in its normal position.

Fig. 4 is a side elevation of a side type action similar to that shown at the right-hand of Fig. 2.

Fig. 5 is a side view of the type action shown in Fig. 4 as seen from a slightly different angle.

Fig. 6 is an end elevation of the type action shown in Fig. 4.

Fig. 7 is a side elevation of another form of type action.

Fig. 8 is a side elevation of the type action shown in Fig. 7 as seen from a slightly different angle.

Fig. 9 is an end elevation of the type action shown in Fig. 7.

Figs. 10, 11 and 12, respectively, are side elevations of various other forms of central type actions.

Fig. 13 is an end elevation of the modification shown in Fig. 12.

Fig. 14 is a side elevation of a further form showing a central and side type action.

Fig. 15 is an end view of the type actions shown in Fig. 14.

Fig. 16 is a sectional view of a typewriting machine showing a further modification of type action and its position in the frame.

Figs. 17, 17[a], 17[b], 17[c], 17[d] and 18 show diagrammatically the relative movements of the various parts of the form of type actions shown in some of the modifications hereinafter described.

Similar reference characters refer to similar parts throughout the several views of the drawings.

General construction.

Referring first particularly to Figs. 1 and 2 of the drawing, 1 represents the base of the machine, in which are mounted key levers 2, and a shift lever 3, and which carries a superstructure or frame 4, here shown indirectly, supporting type carriers 5, carriage frame 6, longitudinally reciprocating carriage 7 and platen adjusting means.

Mounted on the upper part of the frame is a top plate 8 extending entirely across the front, and from front to rear, of the machine at either side, having a rear transverse connecting member 9, as clearly shown in Fig. 2. On the member 9 is mounted an adjustable block or abutment 10 serving as a backing for the platen to receive the compressive action of the type as will be hereinafter explained. The abutment 10 is provided with a base portion 11 of inverted T-shaped form in cross section, as indicated in dotted lines, Fig. 2, sliding in a groove in the member 9 of the machine. Suitable retaining plates 12 are attached at the sides of the groove, engaging the upper sides of the base 11 of the abutment 10 to normally prevent a removal of the same.

Projecting upwardly from the base 11 are two diverging arms 13 adapted to have pivotal or hinged connections at 14 with arms 15 on the carriage frame.

The carriage frame.

This frame is provided with a suitable base plate 16 extending entirely across the machine, having a lower guide-rail 17 on which the carriage rests, and an adjustable upper guide-rail 18 carried by upwardly projecting arms 19 at the ends of the base plate. Both guide-rails are preferably provided with ball-bearings to permit the free reciprocation of the carriage in its course of travel. A third guide-rail 20 is also provided between the upwardly extending arms 19 adapted to form an abutting surface for reasons that will be hereinafter explained. The carriage frame in normal position, shown in Fig. 1, is adapted, through the connection 14, to have a pivotal movement about the abutment 10 when actuated by the shift mechanism.

The platen carriage.

The carriage comprises, besides the paper roller 21 and non-rotating flat metallic platen 22, a plate 23 at either end thereof supporting the paper roller 21 and suitably connected to form a rigid structure.

The platen 22 is preferably a flat steel or metallic plate having beveled edges extending the entire length of the paper roller (which also serves as a backing for the platen) between the end plates 23, adapted to receive the impression of the type on the paper as the carriage is fed along. The type carried by the type carriers 5 are provided with flat printing surfaces co-acting with this flat platen thereby avoiding the possibility of incurring a blurred copy when manifolding due to a spreading action exerted by the curved surfaces of ordinary type, and, also, imperfect impressions due to the relative increase in diameter of the platen or paper roller with the paper about the same tending to shorten the normal stroke of the type carrier.

A guide 24 is provided adjacent the printing point on the platen 22 and is secured to any convenient and relatively fixed part of the machine, but preferably shiftable with the platen, to insure alinement and, also, to prevent vibration of the type at the moment of contact.

The under side of the carriage is provided with a grooved guide-rail 25 co-acting with ball-bearings on the guide-rail 17 of the carriage frame as above mentioned. The upper part of the carriage is preferably provided with a flat rail 26 to reduce friction, similarly engaging ball-bearings in the upper guide-rail 18 of the carriage frame, the carriage being balanced to act as a lever about the lower guide-rail 17 as a fulcrum. A longitudinal rail 27 extends across the rear of the carriage from the end plates 23, barely engaging the rail 20 of the carriage frame, to avoid unnecessary friction, but permitting the compressive action of the type on the platen to be taken up in a hori-

zontal direction through the paper roller 21, the side plates 23, and the rail 27 to the hinged connection 14 on the abutment 10.

It is, of course, to be understood that the carriage may be provided with any suitable form of paper table, as shown at 28, as well as upper and lower feed rollers and pressure rollers (not shown) to guide the paper and hold the same in place in its movement about the platen or paper roller. The carriage feed and ribbon feed mechanism, which may be of any desired style, are also omitted for the sake of clearness.

The carriage adjusting mechanism.

One of various possible forms of platen adjusting mechanism is shown in the accompanying drawings, and comprises a rack 29 on the base 11 of the abutment 10 adapted to be engaged by a pinion 30 at one end of a shaft 31. This shaft extends partially across the rear and to one side of the frame of the machine, and has at its opposite end a beveled gear 32 meshing with a similar gear 33 carried on a shaft 34 extending to the front of the machine as shown clearly in Figs. 1, 2 and 16. Mounted on the front of the machine and visible to the operator is a suitable dial 35 graduated in a number of equal parts, each part denoting the thickness of an ordinary sheet of paper suitable for use on typewriting machines. On the forward end of the shaft 34 is a pointer or indicator 36 adapted to co-act with the dial 35 and indicate the relative position of the platen with respect to the end of the normal stroke of the type carrier and also the number of sheets of paper best adapted to be printed upon with the parts in that position. A suitable lug 37 is provided on the pointer whereby the same may be conveniently grasped by the operator and moved to rotate the pinion engaging the rack 29 on the abutment so as to move the same forwardly or rearwardly, as desired. The rack and pinion hold the abutment firmly in adjusted position by means of a pin carried by the pointer 36 engaging holes in the dial 35.

Shift mechanism.

Mounted on the base 1 of the machine, and at one side of the key levers 2, is a shift key lever 3 pivotally mounted on a stud 38, projecting from the side of the frame, Fig. 2. The rearwardly extending end of the shift lever 3, or, if preferred, a separate arm movable therewith, is provided with a forked end 39 engaging a roller 40 carried by an arm 41 mounted on a transverse rock shaft 42. Forwardly extending arms 43 are pivotally connected with vertically adjustable shift bars 44 engaging the base 16 of carriage frame 6, so that when the shift key is depressed the shaft 42 will be rotated through the intermediate connections to raise the shift rod and rotate the carriage frame about its connections 14 with the abutment 10 so that the platen will be in position to receive impressions from the type when printing upper case characters.

The operation of these features of the invention will be obvious from the above description.

Action shown in Figs. 1 to 6, inclusive.

On the base of the frame of the machine are mounted a plurality of transverse beams 45, 46 and 47 for supporting the type actions and actuating mechanism hereinafter described. Each of these beams preferably comprises a downwardly curved transverse portion supported at its ends by downwardly diverging legs resting on the base 1. Each beam with its supporting legs is preferably cast integrally so as to form as nearly as possible a rigid structure with the frame of the machine. It is obvious, of course, that these transverse members may be connected with any other part of the machine or supported in a manner other than that above described, although it is believed that the structure as shown is more advantageous. The beam 45 is provided with a longitudinal groove adapted to be engaged by a lug 48 on a block 49 supporting each type carrier 5. The block 49 is secured to the beam in any suitable manner as, for instance, by a machine-screw 50, as shown. The lug and groove connection maintains an accurate alinement of the type.

On the transverse beam 46 are mounted a plurality of adjustable brackets 51, one for each type action. These brackets are preferably secured to the transverse beam 46 by means of a clamping screw 52 threadedly engaging the bracket, but loosely engaging an opening through the transverse beam. At one side of the transverse beam is a second screw 53 provided with a collar 54 adapted to engage a recess in the adjustable bracket. By turning the screw 53, after first loosening the screw 52, it is obvious that a forward and rearward movement of the bracket may be obtained, according to the direction in which the screw is turned. After the bracket is in adjusted position, the screw 52 is tightened thereby firmly clamping the collar 54 between the bracket 51 and the lower part of the transverse beam, as clearly shown in Fig. 1. A construction of this kind positively prevents any dislocation of the bracket to cause an irregularity in the alinement or variation in the effective stroke.

Each adjustable bracket 51 is provided with forwardly and rearwardly projecting arms or portions to which various parts of the actuating mechanism may be connected. On the arm 55 is pivotally mounted an oscillatory cam member 56 provided with a cam slot 57 which receives a roller 58 carried

at the end of one arm of a bell crank lever 59 pivotally mounted on the forwardly projecting arm 60. The oscillatory cam member, having a projecting portion 61 is connected by means of a link 62 with the type carrier 5. As the oscillatory cam member 56 is swung around its connection with the adjustable bracket 51 it will be seen that a toggle is formed by means of this projecting portion 61 of the oscillatory cam member and the link 62 between the adjustable bracket and the point of connection on the type carrier, as clearly shown in dotted lines in Fig. 3.

The front arm of the bell-crank lever 59 is pivotally connected with one link 63 of a second toggle. A complementary link 64 is adjustably connected with the transverse beam 47. One of the links of this last mentioned toggle is connected through a vertical adjustable pull-rod 65 with the actuating key lever 2. It will thus be seen that on a depression of the key, the toggle links 63—64 will be extended causing the bell-crank lever 59 to swing about this pivotal connection with the bracket to swing the opposite end carrying the roller 58 upward to bring the type into printing position.

The cam slot 57 in the oscillatory cam member is preferably of a configuration adapted normally to cause a gradually increasing rate of movement during the first portion of travel of the type carrier and a gradually decreasing rate of movement during the latter part, terminating in a relatively slow rate of movement and exerting a compressive or squeezing action of the type on the paper. By means of the double toggle arrangement, as above described, a very heavy pressure may be exerted on the paper and yet the cam slot may be so formed as to bring the type into contact therewith without noise or impact. It is, of course, to be understood that the type carrier is also positively limited in its movement toward the platen by this mechanism, for it can not possibly move farther than the position attained when the toggle between the adjustable bracket and the type carrier is in extended position. The end of the cam slot, which gives the compressive action to the type, also aids to break the toggles on the return movement of the type carrier and the key bar.

At this point may be briefly noted the desirability of having a rearwardly or forwardly adjustable platen with respect to the end of the normal stroke of the type carrier. Fig. 3, in which the type carrier is projected to the printing position, shows the platen in a relation to the end of the normal stroke of the type carrier suitable to print on one sheet of paper. By moving the platen rearward a predetermined distance a number of additional sheets of paper corresponding to the number indicated on the dial at the front of the machine may be inserted without changing the relative printing point between the type and the paper.

The construction of the type action, shown in Figs 4, 5 and 6, is slightly different from that shown in Fig. 3, by reason of the fact that the actions at either side of the center key are at an angle thereto. The type carrier 5, oscillatory cam member 56 and bracket 51 are substantially the same in general construction, but are mounted at an angle relatively to the normal vertical plane through the printing point. The type on the type carrier 5 are bent to the necessary angle according to the position of the type carrier to make the proper impression. As the toggle formed by the links 63 and 64, the pull-rod 65 and the key lever 2, which are also similar in construction, move in a substantially vertical plane, it is necessary to provide a suitable form of universal connection between these respective groups of elements moving in different planes. This is accomplished by providing on the forward arm of the bell-crank lever 59 a pin 66 bent at an angle to lie in the same plane as the second group of elements. The angle to which this pin is bent varies according to the location of the type carrier toward or from the center of the machine. This pin 66 engages a suitable recess or hole in a member 67 pivotally connected with the rear end of the link 63 of the toggle. It is, therefore, seen that the member 67 will move along a substantially horizontal line having its pivotal movement about the end of the link 63 as the toggle is extended while the arm of the bell-crank lever 59 moves in almost a straight line and in a plane at an angle thereto, having a universal movement through the pin and hole connection. The operation of the bell-crank lever 59 and oscillatory cam membar 56 is substantially the same as that described in Fig. 3, the toggle being broken when the key is released by the curvature of the cam and the spring attached to the key lever as shown in Fig. 1 for example.

It may here be noted that the cam slot in the oscillatory cam member positively controls the movement of the type carrier away from the platen as well as its movement toward the platen. In other words, as the movement of the type carrier is gradually increased in velocity during the first part of the movement and gradually diminished during the latter part of its movement toward the platen, the reverse will be true, that is, on the return of the type carrier to normal position, it will have a gradually increasing velocity during the first part of its return and a gradually decreasing velocity

during the latter part, thereby tending to insure noiseless and limited return of the type carrier to its normal position of rest.

The type carrier 5, shown in this modification, is preferably of truss form and comprises two side arms 68 and 69, one of which is substantially straight, while the other is bent and connected with the side 68 at its ends. A cross-bar 70 connects the side 68 with the side 69 at substantially the point at which the type bar is connected with the link 62 so as to take up the pressure exerted by the toggle when the same is extended and prevent any bending on the part of the type carrier as it makes the impression.

The entire type bar is preferably made or stamped from an integral piece of sheet metal.

The link 62 as well as the bell-crank lever 59 are preferably made of two similar parts suitably connected at their ends at the point of connection with the adjacent elements in the type action for the purpose, as clearly shown in Fig. 1, of permitting the oscillatory cam member to operate between the sides of these elements.

Modified action shown in Figs. 7, 8 and 9.

The action shown in these figures is quite similar to that shown in the modification just described, the main difference being that a second bell-crank lever 71, connected with the bell-crank lever 59 by a link 72, is substituted for the toggle between the key lever 2 and the bell-crank lever 59. The remaining elements, that is, the type carrier 5, oscillatory cam member 56 and adjustable bracket 51, are substantially the same.

The type carrier is of open work truss construction, and the link and bell-crank lever are each composed of a pair of similar parts connected at their ends as previously described.

Relative ratios between the key-lever and the type-bar.

In order that the characteristic mode of operation of this invention may be adequately comprehended, it will be conducive to clearness to here explain the effect of the mechanism intervening between the key-lever and the type-bar. Broadly speaking, in a mechanism of this nature there are two propositions involved: 1st, the positive mechanical relationship existing between a type-bar and the key-lever whereby a predetermined ascertainable ratio of movement will exist at each station of the travel of these members; and, 2nd, what may be termed the absolute movement of the type-bar when the key-lever is depressed during the normal operation of the machine. That is to say, there is first a ratio which may, of course, vary from one station to another and yet which will be a constant fraction at any one of these stations. This, of course, does not depend upon the actual instant speed of either of these members, but rather upon the relationship between the speeds of the two members, irrespective of whether they actually have a fast or a slow speed; and, second, there is the question as to absolute speeds and variations therein of the type-bar itself when the machine is being operated in the usual manner, ignoring the manner in which the key-lever is moving. The accurate ascertainment of the first proposition is considerably easier than the determination of the absolute speeds and accelerations or retardations of the type-bar as involved in the second proposition, and, therefore, the question of ratios pure and simple will be now discussed.

Turning now to Fig. 17. it will be perceived that the same diagrammatically exhibits the ratio existing between the key-lever and the type-bar, which diagram has been laid out under the assumption that the key lever has a constant movement, that is to say, move at an even rate and consumes equal intervals of time from one station to another. Thus, when the key-lever is depressed to move it through the arc of swing indicated between the stations 0 and 1, the first intermediate lever will move through another arc having a fixed relation to the first mentioned arc, and so on through the various levers and connections, as shown by the diagram. As will be observed from the diagram, however, while the key-lever has been moved through approximately one-fourth of its arc, the type-bar will have moved a distance somewhat exceeding one-fourth of its total path of advancing travel, that is to say, the type-bar will have moved through an arc of 25 degrees, or about 28 per cent. of its forward path, assuming 90 degrees to be its total path of advancing travel. Of course, these and other ratios are to some extent open to variation. Now, when the key-lever moves through the second quarter of its arc, it will be observed from the diagram that the type-bar has greatly accelerated in motion and has moved through a distance very nearly constituting its total path of travel, *i. e.*, to a point indicated by 88° 30′ (or about 98% of its forward swing). In like manner when the key lever has traveled through three-quarters of the distance of its total arc of travel, the type-bar will have traveled through an arc 89° 45′ (or about 99% of its forward travel). In other words, the movement of the type-bar near the end of its travel has been very slow compared with the movement of the key-lever during a corresponding cycle. These ratios will perhaps be more clearly understood by referring to Figs. 17[a] and 17[b], the former showing diagrammatically the ratio existing between the key-lever and the

type-bar, and the latter representing this ratio by means of a curve indicating the velocity ratios under the assumption that the key-lever possesses a uniform motion. From this curve, it will be noted that, with respect to the movement of the key-lever, the type-bar starts under such a movement that its inertia will be easily and smoothly overcome, *i. e.*, the key-lever has ample leverage capacity for overcoming the initial inertia and to set the type-bar in motion. Then it will be observed that this motion of the type-bar undergoes a rapid acceleration during practically all of its remaining path of travel; thus reducing the time required for the type-bar to come to printing position, but just before the type-bar nears its printing position, it will be noted that its motion is retarded and almost brought to a stop (when the key-lever has been depressed about one-half). In other words, during the first half of the depression of the key-lever, the type-bar has been quickly brought into position in a mechanically perfect manner, and thereafter the second half of the depression of the key-lever is available for translation into the powerful silent pressure which is utilized in this machine for effecting the printing operation. That is to say, because of the great leverage existing between the key lever and the type-bar during the second half of the movement of the former, it is possible and easy to produce the pressure required for making an impression and yet this pressure is obtained, not by an impact or by arresting the momentum of the type-bar by the platen as has been heretofore done in front strike machines having a swinging type-bar, but by eliminating the inertia or momentum of the type-bar just before the platen is reached, and utilizing the normal pressure of the finger on the key-lever, highly magnified or intensified, for the purpose of producing the printing pressure and thus secure silence and uniformity of action as well as uniformity in the appearance of the printed matter. The efficient, and yet silent, action of this mechanism may perhaps be more fully understood by referring to Figs. 17[c] and 17[d], which have been laid out on a ratio basis somewhat similar to that of Figs. 17[a] and 17[b]. In the present instance, however, the tabulation is based on the assumption (for purpose of explanation) that the type-bar moves uniformly. Referring to the latter figures, it will be observed that the curve representing the first seven-eighths of the path of the travel of the key-lever, is approximately straight and that thereafter it is sharply deflected; thus showing that the type has very considerable power during the last and most important part of the operation, *i. e.*, producing the printing impression.

Fig. 18 diagrammatically represents the movement ratios existing between the type-bar and the key-lever in the preferred embodiment of this invention. Briefly, it may be observed that, assuming the key-lever to move at a constant rate of speed, the type-bar 5, through the intermediate mechanism, will be moved at an increasing rate of movement during substantially the first quarter of the movement of the key, and a decreasing rate of movement during the second quarter. The third quarter brings the type into position to produce the printing impression, while the fourth quarter exerts a progressive squeezing impression upon the paper, moving the carrier an almost negligible amount. From the standpoint of the ratios of movement, it may be noted that the first quarter of movement of the key-lever will move the type carrier through approximately two-thirds of its distance, the second quarter through nearly the remaining third, while the last two quarters move the type-bar but a small fraction of an inch, or sufficient to effect printing and cause an impression action of the type on the paper. To be more accurate, the number of degrees through which the type carrier moves, as shown by Fig. 18, for the first four $\frac{1}{8}$ths and the last half, respectively, are as follows: first $\frac{1}{8}$th, 20°; second $\frac{1}{8}$th, 42° 30′; third $\frac{1}{8}$th 24° 30′, fourth $\frac{1}{8}$th, 2° 30′, and the last $\frac{1}{2}$ for 30′, or, in other words, at the end of the first $\frac{1}{8}$th stroke of the key lever, the type-bar will have traveled about 22% of its forward stroke; at the end of the second $\frac{1}{8}$th stroke, about 70%; third $\frac{1}{8}$th stroke, about 97%; fourth, $\frac{1}{8}$th stroke, about 99%.

As to the absolute movements of the type-bars, (ignoring the movement of the key lever or other actuating mechanism) it may be stated that such type-bar undergoes an acceleration during its starting movement and quickly attains a high speed, thus bringing it without loss of time to within a very short distance of the platen, at which point its momentum will have been practically all eliminated, and thereafter the type-bar advances comparatively slowly, but under great force, so as to enable it to produce the silent, yet highly efficient, pressure characterizing the work of this machine. The swinging or curvilinear movement of the type carrier is continuous from its retracted limit, *i. e.*, normal position, to its protracted limit, *i. e.*, the extreme position attained in its travel toward the platen. Printing is effected during the final movement of the type carrier in reaching its protracted limit. The full swing of the type carrier is, however, effected without abrupt variation in the speed thereof, without impact between relatively moving parts, and accordingly substantially without noise. In returning, the type-bar undergoes a converse series of movements,

and here it may be noted that it comes to rest in its normal position quietly and easily; here also avoiding or eliminating the noise of impact heretofore always present in front-strike typewriting machines.

A comparison of Figs. 17 and 18, which illustrate but two of the various possible embodiments of the invention, will show a slight difference in the rate of movement of the type carriers under different conditions, and having different elements comprising the action. In this manner, that is, by a substitution of elements or by varying the cam slot on the oscillatory cam member, almost any desired motion may be obtained, that is, of course, broadly speaking, one in which the type carrier starts easily and moves a considerable distance 62° 30′ during the first quarter of the movement of the key-lever, as shown in Fig. 18, or one that moves the same a less distance 25° during the first quarter of the movement of the key-lever, as shown in Fig. 17.

The above diagrams are presented by way of explanation as showing the possibilities of varying the action without departing from the scope of the invention, and are taken as illustrative of such and not in a limiting sense.

Modified action shown in Fig. 10.

Fig. 10 shows a central type action with the type carrier in engagement with the platen and the key depressed. This arrangement, which is slightly different from those previously described, is more compact in its arrangement of parts and is especially adapted to machines of a smaller construction having a platen of the double shift style. Mounted on a transverse beam 73 is a bracket 74 which may be made adjustable, if desired, by an arrangement of parts similar to those illustrated and described in previous modifications. The bracket 74 is provided with a forwardly extending arm 75 to which is directly pivoted the type carrier and a rearwardly extending arm 76, on which is mounted an oscillatory member 77, having a cam slot 78 of a configuration suitable to accomplish the results desired, as above set forth. There is also provided on the bracket a downwardly projecting arm 79, on which is pivoted a link 80, having at one end a roller 81, engaging the cam slot 78 in the oscillatory cam member. The link 80 is connected by the adjustable vertical pull wire 65 with the key lever 2. The oscillatory cam member is provided also with a suitable lug or projecting arm 82, pivotally connected to one end of a link 83, connected at its opposite end to a point near the center of the type carrier. A very powerful, compressive action on the platen by the type is obtained by this construction as will be apparent by reference to this figure. As the cam member 77 swings downward, its pivotal connection with the link 83 tends to form a straight line through the pivot point of cam member 77 on the bracket 74 and the point of connection between the link 83 and type carrier 5. The cam slot is of a configuration to bring these points nearly into alinement and no farther, due to the extension or dwell at the end thereof. The cam slot is preferably of the style above described in connection with the other modifications.

The operation of this construction is as follows:

When the type action is in normal position the oscillatory member 77 is in upright vertical position, the roller 81, carried by the link 80, being at the end of the cam slot nearest the pivot point, the type carrier itself being substantially horizontal. On depressing the key, motion is communicated through the key lever and adjustable pull wire 65 to the link 80 to exert a downward movement thereon. The cam roller 81 tends to swing the oscillatory member 77 downward in traversing the cam slot therein, which, in turn, exerts an upward pull on the type carrier 5, for it is to be borne in mind that at the beginning of the movement, the point of connection between the link 83 and oscillatory member 77 is above the point of connection between the link 83 and the type carrier 5. As the oscillatory member swings downward under the action of the roller 81, the type carrier 5 is swung upward into contact with the platen at a decreasing rate of movement. It is obvious, therefore, that this action is, as are the other modifications, substantially noiseless in its operation.

Modified action shown in Fig. 11.

In the modification shown in this figure, the oscillatory cam member is omitted and the cam slot necessary to give the type carrier its desired movement toward the platen to effect a noiseless engagement therewith is preferably made integral with or directly in the type carrier itself when the same is stamped out. The carrier 84 is pivoted to arm 85 of an adjustable bracket 86, mounted on the transverse beam 87. To any relatively fixed portion of the machine such as a transverse bar 88, is pivoted a bell-crank lever 89 having at one end a roller 90 adapted to traverse a cam slot 91, and at the opposite end a pivotally connected link 92 of a toggle adapted to be actuated through the pull wire 65 and key lever 2 in the usual manner. In operation, depression of the key lever tends to extend the toggle, move one end of the bell-crank lever 88 to the rear, consequently raising the opposite end thereof to cause a

movement of the type carrier 84 about its pivot, and force the type into impression. As in the other modifications, the cam slot 91 is of the desired configuration adapted to positively control the rate of movement of the type carrier in both directions.

Modified action shown in Figs. 12 and 13.

The key action shown in these figures is similar in construction and operation to the modification shown in Fig. 11, but with the parts reversed or behind the type carrier. In Fig. 12 the type is shown in engagement with the platen and the toggle in extended position. The toggle joint is broken when the key is released through the usual spring attached to the key lever, as shown in Fig. 1 for example.

Modified action shown in Figs. 14 and 15.

In these figures, Fig. 14 illustrates one of the keys at the side of the machine and a central key action. On a transverse beam 93 of the machine is mounted an adjustable bracket 94, substantially the same in construction as that described in connection with the previous modifications, provided with front and rear arms 95—96, respectively, to one of which is pivoted the type carrier 97 and to the other a movable member 98 for actuating the type carrier. In this modification, as in Figs. 10, 11, 12 and 13, the type carrier is provided with a suitable cam slot 99 to control its movement. The movable member 98 is pivotally mounted on the rear arm 96 and carries at one end a roller 100 adapted to engage the cam slot 99 and at its opposite end trunnions 101, connecting it with a second movable member 102, which, in turn, is connected with the key lever 2 by the pull wire 65, as above described. A comb or other suitable guide means 103, Fig. 15, is provided, adapted to engage the end of the movable member 102 to guide the same in a vertical plane.

In the center action all the parts move substantially in a vertical plane, but the elements of the side actions have different movements which necessitate the pivotal or trunnioned connection above described. The side type carriers swing upward at an angle, as does the movable member 98, while the movable member 102 has a direct vertical movement under the action of the pull wire. In this modification it is advisable to have the movable members 102 of different lengths, for, as the type carriers approach the side of the machine, they have a less actual distance to travel in a vertical plane. As it is, of course, desirable to have the dip of each key lever equal, by placing the connection between the pull wire 65 and the movable member 102 farther from the pivot point, the same dip is provided for and at the same time the movable member is given a less angular motion as required.

The operation of this modification is quite similar to the operation of the previously described modification. On actuating one of the keys the pull wire exerts a downward force upon the movable member 102, which communicates that movement to the movable member 98 causing the roller 100 carried thereby to traverse the cam slot 99 in the type carrier and bring the type to impression. If the type carrier 97 is at the side of the machine, the movable member 102 has a vertical movement under the action of the pull wire 65 and the guide comb 103, while the movable member 98 moves upwardly at an angle corresponding to the movement of the type carrier, permitted by the pivotal connection between the two movable members. As in the other modification, the cam slot is preferably of such configuration as to cause a rapid increasing and decreasing movement up to substantially the point of impression where the compressive or squeezing action takes places under the action of the cam roller and final portion of the cam slot, during the latter part of the movement of the key lever, the printing actually being done before the key lever stops in its downward movement.

Modified action shown in Fig. 16.

This action is shown on a complete machine in order that the positioning of the parts on the frame may be fully understood.

For the sake of clearness, Fig. 16 shows only a central action and an extreme side action, the intermediate actions being similar in general construction. On the transverse beam 104 are mounted a plurality of rigidly fixed, but adjustable, brackets 51, one for each type action. Each of these brackets 51 is provided with a forwardly extending arm 60 on which is pivoted the type carrier 5, as in Fig. 1.

Each type carrier is of truss form, that is, having two sides members with a cross member at substantially the point where the force is applied to exert the compressive action of the type on the platen, thereby tending to prevent any bending or vibration of the carrier as the key is depressed as previously described. It is also to be noted that a construction of this style having an actuating point remote from the pivot point will also tend to prevent any vibration of the carrier when actuated.

The bracket 51 is also provided with a rearwardly extending arm 53′, on which is pivotally mounted a bell-crank lever 105 having at one end thereof a roller 106 adapted to traverse a cam slot 107 in the type carrier 5. The opposite end of the lever 105 is provided with a roller 108 adapted to en-

gage the forked end of a second bell-crank lever 109 pivotally mounted on a convenient and relatively fixed part 110 of the machine. The lever 105 is preferably composed of two pieces of sheet metal connected at their ends by the pivots of the rollers 106 and 108, and at their center by the pivot point on the arm 53′ about which it moves.

Each bracket is provided with mechanism for adjusting or altering the path of travel of the type with respect to the platen. This adjusting mechanism, which is substantially the same as above described in connection with Fig. 1, comprises the bracket 51 having a longitudinal slot through which passes the screw 52, having a threaded engagement with the transverse beam for clamping the bracket firmly thereto in adjusted position.

From the above description, it is obvious that on pressing a key the movement is communicated through the pull wire 65 to swing the upper end of the bell-crank lever 109 forward and raise the forward end of the bell-crank lever 105. The cam slot in the type carrier is of such configuration as to cause an upwardly swinging movement of the type carrier as the forward end of the bell-crank lever carrying the roller engaging the cam slot is raised.

This cam slot may be of any desired shape to give the type carrier a gradually increasing velocity during the first part of its movement and gradually decreasing velocity during the latter part of its movement as heretofore explained.

The mechanism for operating the type carriers at either side of the central type carrier is substantially the same, the main difference being in the length of pull wires.

As many changes could be made in the above construction and many apparently widely different embodiments of this invention could be made without departing from the scope thereof, it is intended that all matter contained in the above description or shown in the accompanying drawings shall be interpreted as illustrative and not in a limiting sense.

Having described my invention, what I claim as new and desire to secure by Letters Patent, is:

1. In a pressure-printing typewriting machine, in combination, a normally retracted type carrier movable in a continuous curvilinear path to a protracted printing limit, an actuating key therefor, and operative connecting means between said type carrier and said key for effecting a quick transposition of the former to a position adjacent its printing limit and an uninterrupted slow but forcible printing movement thereafter, with but slight and gradual variation in the resistance of said key when operating at a substantially uniform speed.

2. In a typewriting machine, in combination, a pivoted type carrier having a swinging movement to its printing limit, and manually operable means to effect a substantially noiseless printing action of said type carrier by reducing the momentum of the latter without impact prior to its printing movement and thereafter slowly forcing said type carrier through said printing movement.

3. In a typewriting machine, in combination, a platen, a curvilinearly movable type carrier, and means to effect a quick transposition of the latter to a position adjacent its printing limit and at a speed gradually reduced during the final portion of said transposition and thereafter to effect printing movement of said type carrier to a limit governed substantially independently of said platen.

4. In a typewriting machine, in combination, a curvilinearly movable type carrier, and means to effect a quick transposition thereof to a position adjacent its printing limit and at a speed gradually reduced during the final portion of said transposition and thereafter to effect printing movement of said type carrier to a limit governed by said means.

5. In a pressure printing typewriting machine, in combination, a pivoted type carrier, and manually operable means for effecting a continuous swinging movement of said type carrier to its printing limit and effecting printing thereby during the final portion of such movement substantially independently of the momentum of said type carrier, said means including a member transmitting power to said type carrier at a point remote from its axis of motion during the printing movement thereof.

6. In a typewriting machine, in combination, a platen, a pivoted type carrier having a swinging movement, an actuating key for the latter, and operative connecting means between said key and said type carrier for effecting printing movement of the latter to a limit determined substantially independently of said platen, said means including a member transmitting power to said type carrier at a point remote from its axis of motion during the printing movement thereof.

7. In a typewriting machine, in combination, a swinging type carrier having a continuous movement from a retracted limit to a protracted limit, and means to effect said movement without abrupt reduction of the momentum of said type carrier during said movement, said means including a member transmitting power to said type carrier at a point remote from its axis of motion when said type carrier approximates its protracted limit.

8. A typewriting machine comprising, in

combination, a swinging type carrier, a platen, an actuating key, and operative connecting means between said type carrier and said key adapted during the final half-stroke of the latter to dissipate gradually substantially all the momentum of said type carrier before the same contacts with said platen and then slowly and powerfully advance said type carrier to produce pressure requisite for printing.

9. In a typewriting machine wherein printing is effected through an inking ribbon, in combination, a platen, a pivoted type carrier mounted to swing freely toward said platen to its printing limit, and actuating and controlling means for said type carrier including means to limit the swinging movement thereof toward said platen substantially independently of the latter.

10. In a typewriting machine wherein printing is effected through an inking ribbon, in combination, a platen, a pivoted type carrier mounted to swing toward said platen to its printing limit, and actuating and controlling means for said type carrier including means to limit the swinging movement thereof toward said platen substantially independently of the latter and without abrupt impact between a moving and a rigid part.

11. In a typewriting machine wherein writing is effected through an inking ribbon, in combination, a platen, a pivoted type carrier mounted to swing freely toward said platen to its printing limit, an inking ribbon positioned for engagement by said type carrier, and actuating and controlling means for said type carrier to limit the swinging movement thereof toward said platen substantially independently of the latter, said means including a member movable a distance greater than the contemporaneous movement of said type carrier while the latter is in engagement with said ribbon for increasing the pressure applied to said type carrier to effect the printing.

12. A pressure printing typewriter comprising the combination of a platen, a pivoted type carrier, an operating key, and connections between the key and carrier adapted to move the carrier continuously but with gradually reduced speed and augmented force just as it approaches the limiting printing position.

13. A pressure printing typewriter comprising the combination of a platen, a pivoted type carrier, an operating key, and connections between the key and carrier adapted to move the carrier continuously but with gradually reduced speed and augmented force just as it approaches the limiting printing position, said connections being also adapted to establish the limit of movement of said carrier substantially independently of said platen.

14. A typewriting machine comprising, in combination, a platen, swinging type carriers each having an actuating mechanism connected therewith, each type carrier having two side bars and an intermediate transverse member connected to one of said side bars at substantially the point at which said type carrier is connected with said actuating mechanism.

15. A typewriting machine comprising, in combination, a flat metallic platen, a swinging type carrier of truss form, a key lever, intermediate connections between the key lever and the central part of the type carrier for actuating the latter to cause a gradually decreasing rate of movement at the end of the path of travel of the type carrier, and type carried by the type carrier having flat printing surfaces adapted to coact silently with said flat platen.

16. A typewriting machine comprising, in combination, a platen, an upwardly swinging type carrier of truss form construction, a point about which said type carrier swings, and actuating mechanism connected with the central part of the type carrier for imparting a variable rate of movement to said type carrier as it moves toward said platen.

17. A typewriting machine comprising, in combination, a platen, a swinging type carrier adapted to have a noiseless contact with said platen, a guide adjacent said platen to prevent vibration of the type carrier at the moment of contact with the platen, means for adjusting the platen relatively to the normal limit of travel of said type carrier, actuating mechanism connected with said type carrier, and means for adjusting said type carrier to alter its limit of travel toward the platen.

18. A typewriting machine comprising, in combination, a platen, a swinging type carrier adapted to have a noiseless contact with said platen, actuating mechanism connected with said type carrier at a point remote from that about which said carrier swings, said actuating mechanism having means for limiting the travel of said carrier, and individual means for altering the limit of travel of said type toward the platen.

19. A typewriting machine comprising, in combination, a platen, a type carrier mounted to swing into contact with said platen, an actuating member, a toggle and a member having a cam surface interposed between said actuating member and said type carrier, and means adapted to traverse said cam surface when said toggle is extended to swing said carrier into contact with the platen.

20. A typewriting machine comprising, in combination, a platen and a plurality of type actions, each action having a type carrier, and an actuating member; a toggle, a bell crank lever, and a member having a cam surface operatively connected in series

between said actuating member and said type carrier to transmit impulse from said actuating member to said type carrier.

21. A typewriting machine comprising, in combination, a platen, a plurality of type actions, each action having a swinging type carrier, an actuating member, a toggle between said type carrier and said actuating member, said type carrier being of truss form and having a point at which power is applied forming one point of connection for said toggle.

22. A typewriting machine comprising, in combination, a platen, a swinging type carrier, an actuating member, means interposed between said carrier and actuating member adapted to exert an increasing pressure upon the type carrier as the same approaches the platen, said type carrier being of truss form and having its point of connection with said means near the center of the truss.

23. A typewriting machine comprising, in combination, a platen, a swinging type carrier, an adjustable bracket, an oscillatory cam member mounted on said bracket and connected with said type carrier, a bell crank lever engaging said oscillatory cam member, and means connecting said bell crank lever and said actuating member to move said type carrier toward said platen at a gradually decreasing rate of movement.

24. A typewriting machine comprising, in combination, a platen, a swinging type carrier, a bracket, an oscillatory cam member pivoted to said bracket and connected with said type carrier, means for moving said bracket toward and from the platen, a bell crank lever mounted on said bracket having a part coacting with said oscillatory cam member, and a toggle interposed between one end of said bell crank lever and said actuating means.

25. A typewriting machine comprising, in combination, a plurality of type actions each action having a swinging type carrier, an actuating member, an adjustable bracket, a cam member interposed between said bracket and said type carrier adapted to form a toggle when the type carrier is in printing position, and a second toggle interposed between said cam member and said actuating member.

26. A typewriting machine comprising, in combination, a pivoted type carrier, an actuating member, a transverse beam, a bracket mounted on said beam, an oscillatory member having a cam slot therein, mounted at one side of said bracket, a link connecting said member and said type carrier, a lever mounted on said bracket having a means adapted to engage and traverse the slot in said cam member, and a vertically disposed pull wire connecting said link with said actuating member.

27. A typewriting machine comprising, in combination, a pivoted type carrier, a support therefor, an actuating member, a transverse beam, a bracket mounted on said beam, a bell crank lever mounted on said bracket, separate means carried by said bell crank lever engaging said type carrier, and means intermediate said bell crank lever and said actuating member for conveying movement from one to the other.

In testimony whereof I affix my signature in the presence of two witnesses.

NILS H. ANDERSON.

Witnesses:
SHERMAN M. BACON,
FREDERICK W. GOODRICH.

477

N. H. ANDERSON.

TYPE WRITING MACHINE.

APPLICATION FILED JUNE 12, 1914.

1,312,821.

Patented Aug. 12, 1919.

4 SHEETS—SHEET 1.

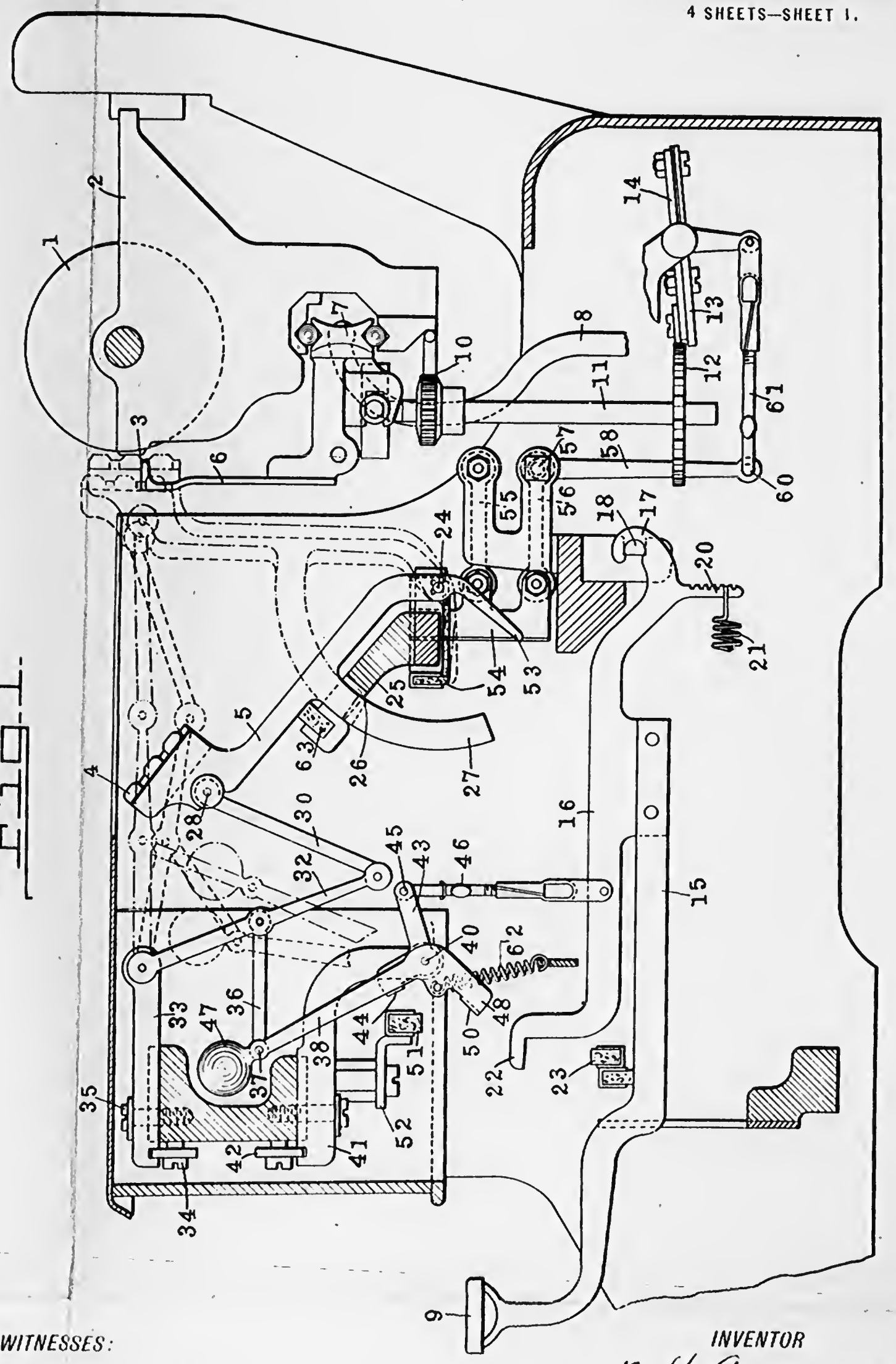

Fig. 1.

WITNESSES:

Jesse A. Holton

Wm Hessler.

INVENTOR

N. H. Anderson

BY

Dull Warfield & Dull

ATTORNEYS

478

N. H. ANDERSON.

TYPE WRITING MACHINE.

APPLICATION FILED JUNE 12, 1914.

1,312,821.

Patented Aug. 12, 1919.

4 SHEETS—SHEET 2.

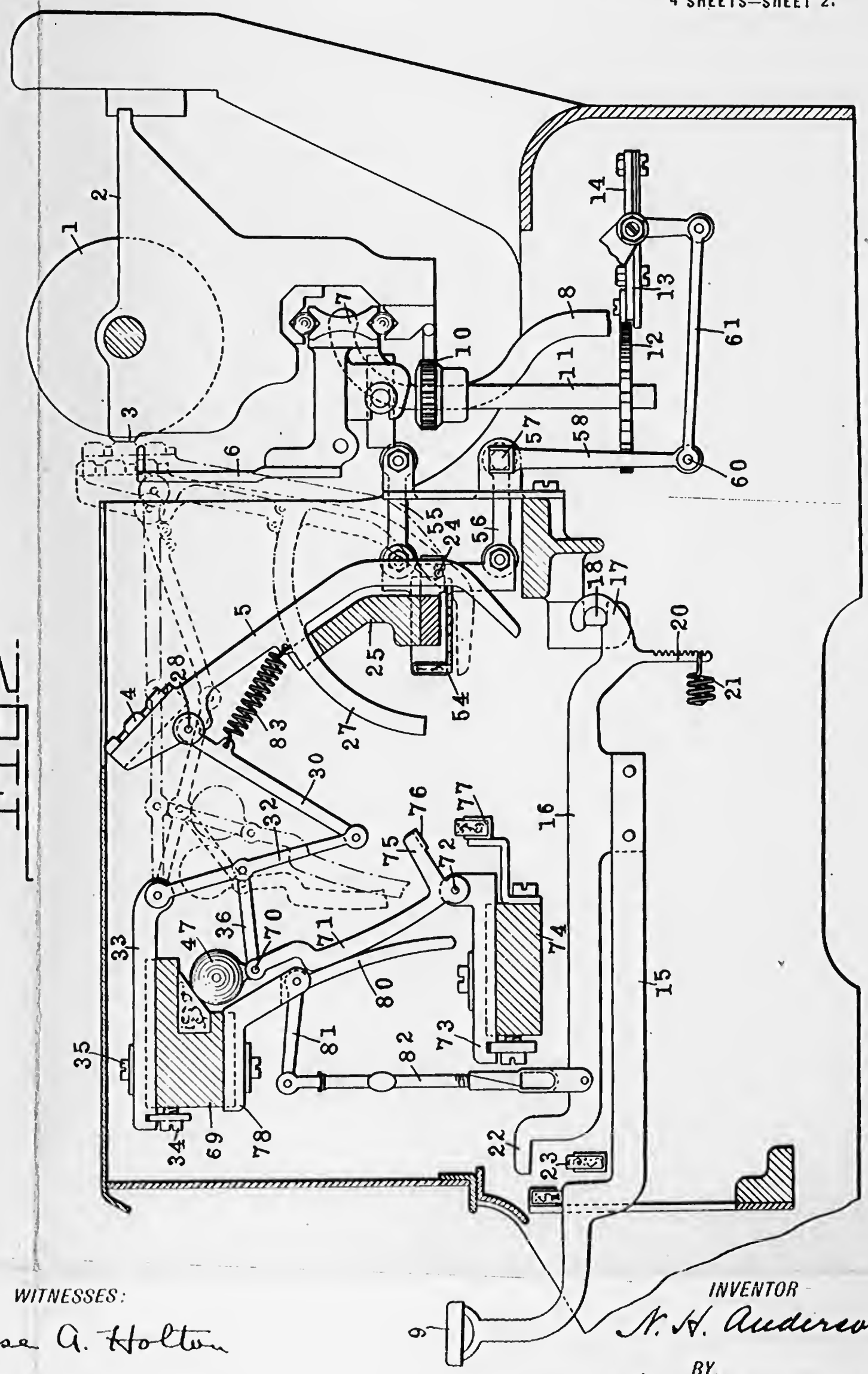

Fig 2.

WITNESSES:

Jesse A. Holton

Wm Wessler.

INVENTOR

N. H. Anderson

BY

Dull, Warfield & Dull

ATTORNEYS

479

N. H. ANDERSON.

TYPE WRITING MACHINE.

APPLICATION FILED JUNE 12, 1914.

1,312,821.

Patented Aug. 12, 1919.

4 SHEETS—SHEET 3.

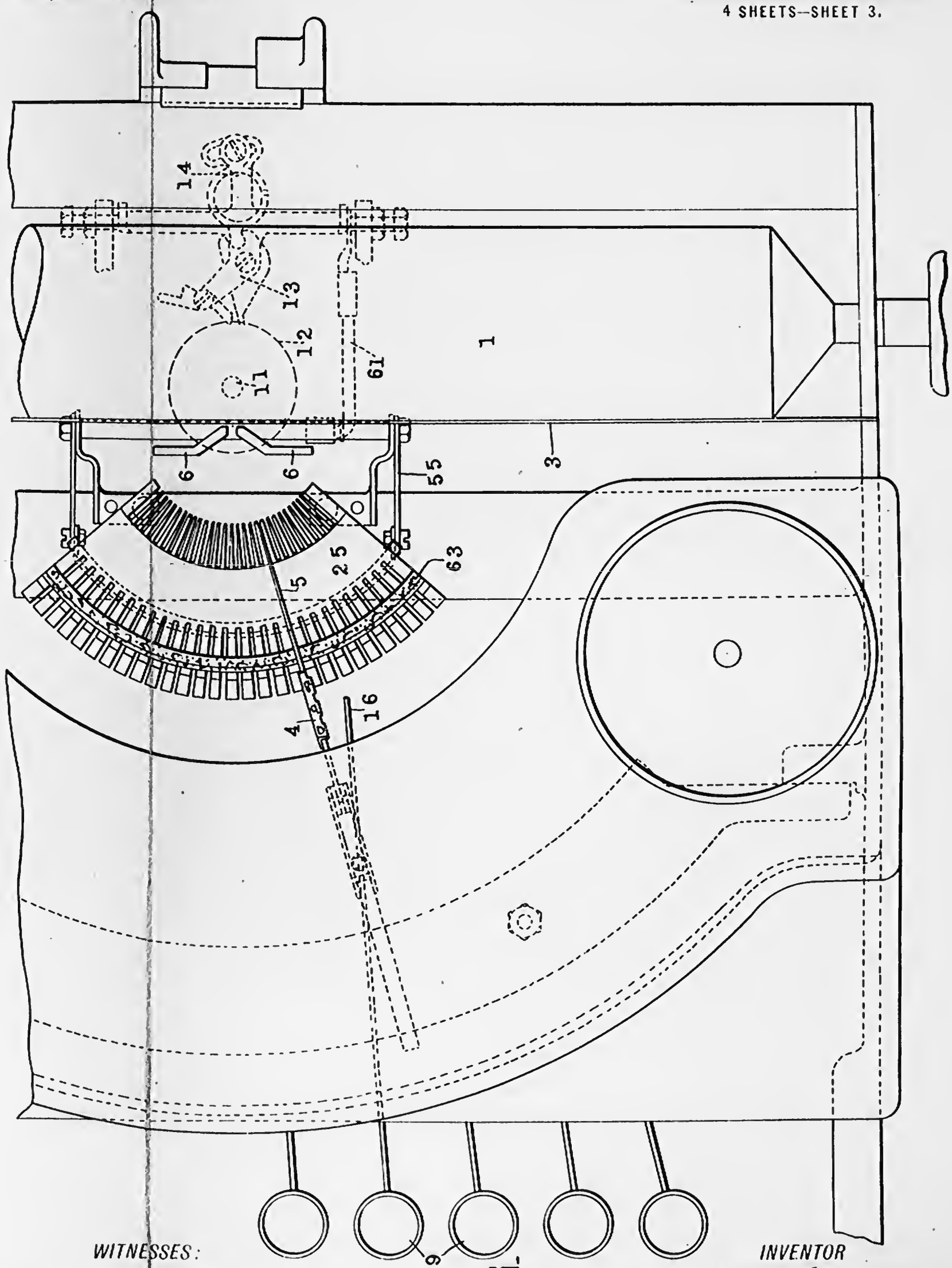

Fig. 3

WITNESSES:

Jesse A. Holton.

Wm. Fessler.

INVENTOR

N. H. Anderson

BY

Duell, Warfield & Duell

ATTORNEYS

480

N. H. ANDERSON.
TYPE WRITING MACHINE.
APPLICATION FILED JUNE 12, 1914.

1,312,821.

Patented Aug. 12, 1919.
4 SHEETS—SHEET 4.

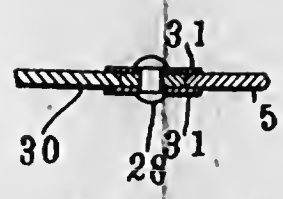

Fig. 6.

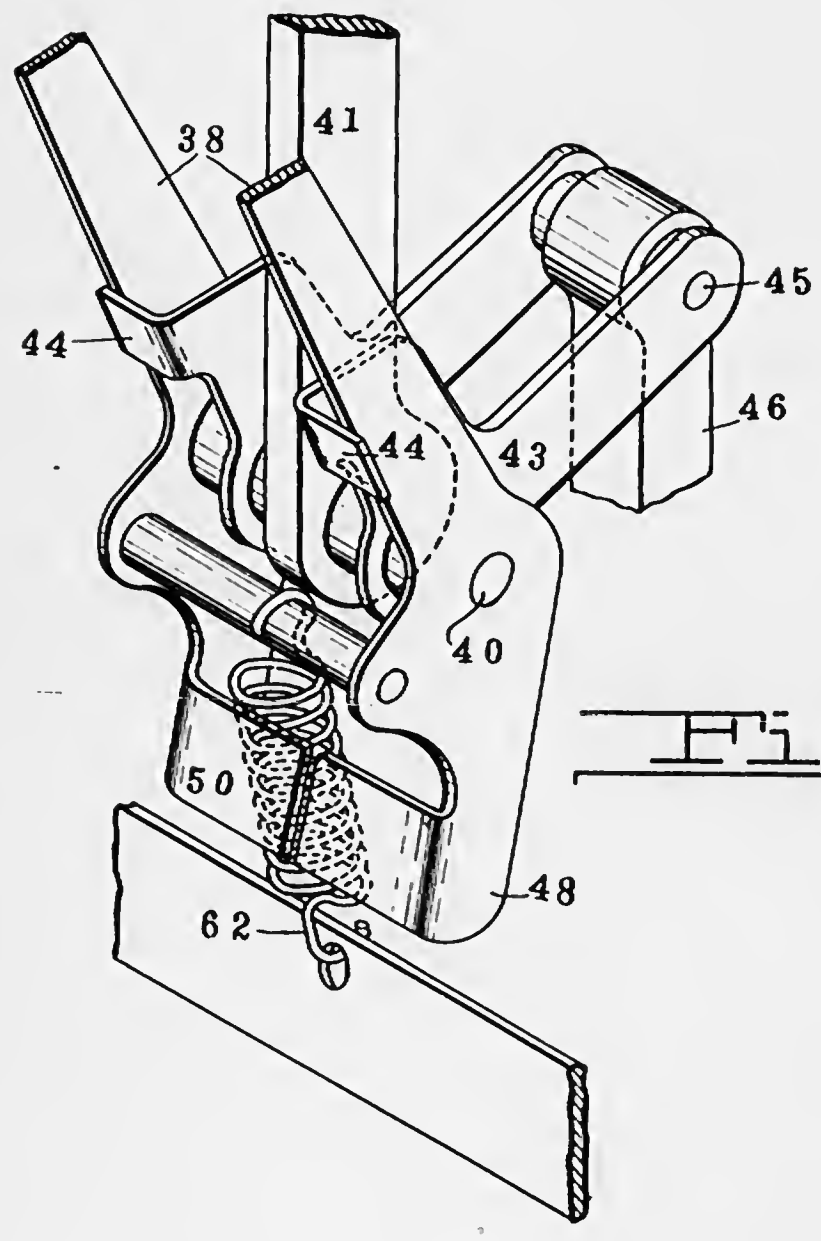

Fig. 4.

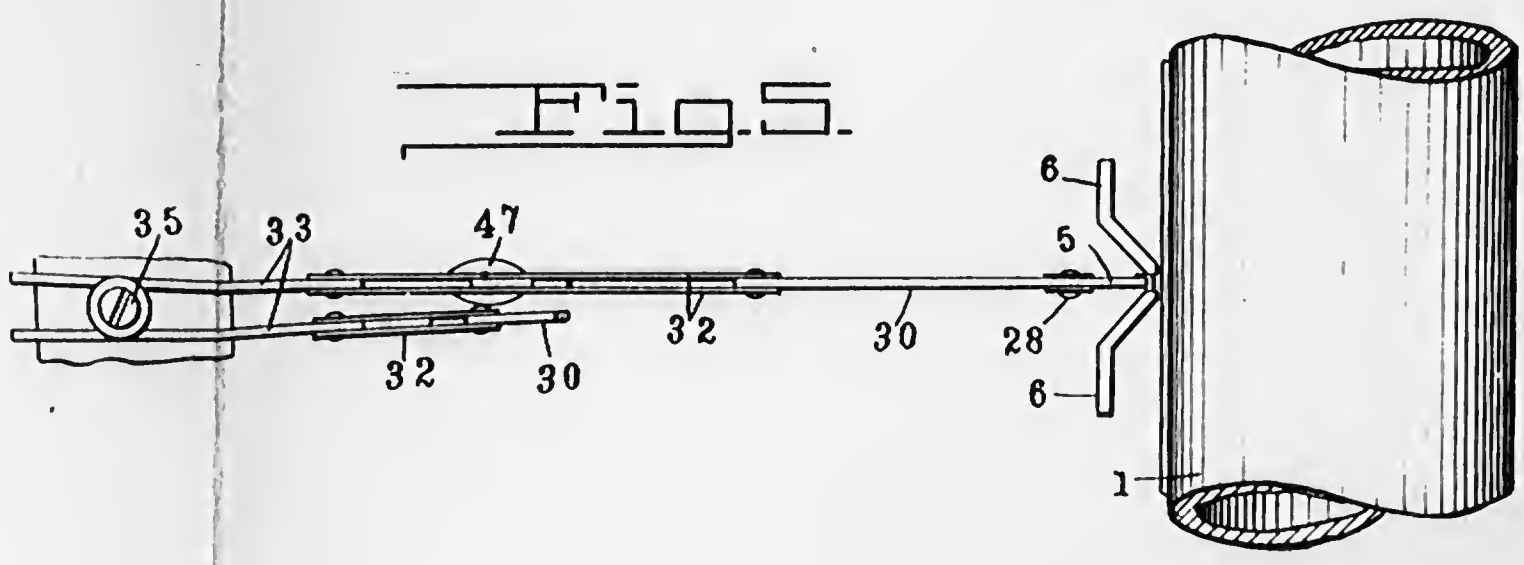

Fig. 5.

WITNESSES:

Jesse A. Holton

Wm. Hessler

INVENTOR

N. H. Anderson

BY

Duell, Warfield & Duell

ATTORNEYS

UNITED STATES PATENT OFFICE.

NILS H. ANDERSON, OF MIDDLETOWN, CONNECTICUT, ASSIGNOR TO THE NOISELESS TYPEWRITER COMPANY, OF MIDDLETOWN, CONNECTICUT, A CORPORATION OF CONNECTICUT.

TYPE-WRITING MACHINE.

1,312,821. Specification of Letters Patent. Patented Aug. 12, 1919.

Application filed June 12, 1914. Serial No. 844,658.

To all whom it may concern:

Be it known that I, NILS H. ANDERSON, a citizen of the United States, residing at Middletown, in the county of Middlesex and State of Connecticut, have invented certain new and useful Improvements in Type-Writing Machines, of which the following is a full, clear, and exact description, such as will enable others skilled in the art to which it appertains to make and use the same.

This invention relates to typewriting machines and with regard to certain more specific features thereof, to improvements in type actions and associated and coacting parts.

One of the objects of the present invention is to provide a simple and practical type action which will be efficient in use and reliable in operation. Another object is to provide a mechanism of the above character having few parts which will be cheap to manufacture and easy to assemble. A further object is to provide a type action which will be rapid in operation and peculiarly applicable to the silently operating machine. A further object is to provide a typewriting machine with a plurality of type actions of the above-mentioned character compactly arranged to permit the use of a relatively larger number of printing characters. A further object is to provide practical means for so mounting the parts as to enhance their ease of movement and to reduce wear. Other objects will be in part obvious and in part pointed out hereinafter.

The invention accordingly consists in the features of construction, combinations of elements and arrangement of parts which will be exemplified in the construction hereinafter set forth, and the scope of the application of which will be indicated in the following claims.

In the accompanying drawings, wherein is shown two of various possible embodiments of this invention,—

Figure 1 is a sectional elevation of a typewriting machine showing one type action and such other parts as are necessary to fully understand the present invention;

Fig. 2 is a similar view of a modification;

Fig. 3 is a partial plan view of the parts shown in Fig. 1, many of the actions being removed for the sake of clearness;

Fig. 4 is a detail perspective view of a connection;

Fig. 5 is a plan view of a type action in printing position; and

Fig. 6 is a detail sectional view of the connection between the type bar and actuating mechanism.

Similar reference characters refer to similar parts throughout the different views of the drawings.

Referring to Fig. 1 more in detail, in which one form of type action is shown as applied to a noiseless type-writing machine to which it is particularly adapted, a platen roller 1 is mounted on a carriage 2, between the end plates of which and adjacent the platen roller extends a flat sheet metal platen 3 adapted to take up the pressure exerted by the type 4. The swinging or curvilinearly movable type carriers 5 are actuated in the usual manner by a key 9 in the keyboard of the machine through an intervening system of power-multiplying and speed control devices comprising a series of links and levers so arranged as to move the type carrier rearward at a gradually increasing, followed by a gradually decreasing, rate of movement, whereby the type silently coact with the platen and produce the printing impression by pressure in contra-distinction to the impact or blow exerted by many forms of commercial machines. As the type 4 move to the normal printing plane at the end of their limited range of movement they coact with a type guide 6 which maintains perfect alinement and equidistant spacing of the printed characters.

The platen carriage 2 is mounted upon a shift rail 7 which is adapted to be moved upward or downward from its normal intermediate position by suitable shift mechanism, not herein shown, connected with the lower ends of links 8, one at each end of the shift rail. As the shift mechanism forms no part of the present invention, except in so far as it may broadly enter into certain combinations, it is thought that a specific disclosure and description thereof may be omitted as its broad function is well known. This carriage 2 is driven by a

spring driving drum in the usual manner, and its intermittent letter-feed movement is controlled through a rack and pinion mechanism 10 at the upper end of an escapement shaft 11, the lower end of the shaft being provided with a wheel 12 coacting with escapement dogs 13 mounted on a rocker member 14. This rocker member is connected, through a series of links and levers, as will be hereinafter more fully explained, with a movable part of the type action, whereby it is operated at the proper time and frequency to obtain the desired letter-feed travel of the carriage.

Each key lever 15 is preferably composed of two parts of different thicknesses of material, one of which 15 is riveted or otherwise secured to the lower part of the other 16. The upper part 16 of the key lever is pivotally mounted at its rear end 17 to a suitable fulcrum bar 18 and is provided with a downwardly extended arm 20, to which a return spring 21 is secured. The front end of the part 16 is provided with a forwardly extending hook 22 adapted to engage a silencing pad 23 to arrest its movement after traversing a predetermined distance. This construction provides a resilient and less tiring touch, as the key lever is arrested without noticeable impact or concussion.

The type carrier 5, at the other end of the action, is pivoted at 24 in a comb member or segment 25 which is provided for each action with a hole 26 at its upper forward part, through which a curved guiding arm 27 integrally formed with the type carrier 5 is adapted to reciprocate curvilinearly. This arm or projection 27 serves to guide the type carrier in the desired direction and prevent lateral movement. The type carrier has, connected at its upper end, immediately back of the type head 4 at the point 28, a link 30 which, when the machine is at rest, extends downward and forward toward the keyboard. In order to reduce the width of the joint between the rear end of this link and the type carrier, the link is made to fit an opening in the type carrier and is held from lateral movement by two very thin washers 31 (Fig. 6) which are secured by a small rivet 28 headed over sufficiently to take any strain to which the joint may be subjected. To the opposite end of this link 30 is secured another link 32, the opposite end of which is pivotally secured to a stationary block 33 adjustably mounted in the front wall of the machine by means of an adjusting screw 34, the adjustment being held by a set-screw 35. These links 30 and 32 form a toggle adapted to move to extended position when the action is operated and thus positively limit the throw of the type and bring it to rest at the normal printing plane independently of the platen. Near the middle of the second-mentioned link 32, which is of the duplex type, is another short, horizontally disposed link 36 extending toward the front of the machine and pivotally connected at its forward end 37 to the upper arm 38 of a bell crank lever pivotally mounted at its elbow 40 in a second block or hanger 41, adjustable by means of a screw 42 engaging the lower transverse portion of the front wall. The short link 36 and the upper arm 38 of the bell crank lever form a second toggle which is also adapted to move to extended position on operation of the action and coacts with the first-mentioned toggle at an angle thereto. Most of these links and particularly the bell crank 38 are preferably made from stamped sheet metal of a resilient character and are arranged in pairs, as shown more clearly in Fig. 4. This arrangement not only increases the strength of the mechanism to withstand the powerful pressure exerted on the paper, but also provides a resiliency in action facilitating rebound of the type carriers and more even movement free from binding at their points of pivotal connection. To avoid confusion, these pairs of links will be considered as being single elements.

Also pivotally mounted on the adjustable block 41, at the same point as the bell crank lever 38, is a clip or lever 43 having a bent-over portion 44 adapted to engage the rear portion of the upper arm 38 of the bell crank lever, as shown more clearly in Fig. 4. The rearwardly projecting arm 43 of this clip is pivotally connected at 45 to the upper end of a pull wire or connection 46, the opposite end of which is pivotally connected with the upper part of the key lever 16. This clip forms with the bell crank lever a loose connection or lost-motion device as shown more clearly in the detail view, Fig. 4. This loose connection does not involve a disconnection of the parts, and consequently does not interfere with the rapid repetition of any single character or require a complete return of the key lever to normal position under such conditions of operation.

As the noiseless machine performs the printing operation by pressure in contradistinction to impact, the time actually used in making the impression may be longer than that required in impact machines. In order to avoid a tendency to blur during the actual printing operation and for other reasons, it is desirable to provide, in the intermediate mechanism between the type carrier and the key lever, means which will accelerate the actual printing operation and withdraw the type from the surface of the paper before the escapement permits movement of the carriage. Therefore, at the upper end of the upper arm of the bell crank lever and preferably integrally formed therewith is a weight or momentum accumulator 47, and at

the forward end of the lower arm 48 is a bent-over portion 50 which is designed to engage a silencing pad or stop bar 51, mounted on brackets 52 and adjustable to any desired point, thereby to regulate the swing of the bell crank lever.

The momentum accumulator is adapted to acquire a certain momentum that is to store and expend energy, to carry the same rearwardly or in the direction of movement of the type to accelerate the actual printing operation.

At this point it may be noted that the weight has a certain turning movement about the pivot point 40 as the key lever is depressed. The force thus exerted is very slight at first, but as the action approaches the dotted line positions (shown in Fig. 1) there is a very decided tendency for the weight to turn about the pivot, thereby assisting in the straightening of the toggles. This force may be increased by lengthening the distance from the center of the weight to the point 40.

As the links of the toggle assume a straightened position, the relative movement of the ends of the links decreases in rate of speed and the pressure exerted thereby is multiplied; consequently the type carrier moves forward during the first part of its movement with gradually increasing speed, and during last part with a gradually decreasing s[illegible], but with greatly increased pressure. [illegible] will thus be noted that the type carrier [illegible]ransposed quickly to a position adjace[illegible]e printing plane and with a speed g[illegible]ly but rapidly reduced during the fina[illegible]on of its travel. Thereafter and without a distinct cessation the type carrier is moved to effect printing.

The momentum accumulator or energy storing means 47, which is directly connected with the actuating mechanism, will swing upward, first into the dotted line position, at which point the movement of the key lever is arrested, after which its momentum or stored energy carries it into the dot-dash position, in which position the printing is concluded. Thus, the rotary momentum of the weight is converted into straight line pressure of the type by the intermediate mechanism. When in final position, the link 36 and arm 38 of the bell crank lever are also in a straight line, and in themselves form a second toggle which not only increases the pressure exerted by the type carrier, but also limits the movements of the movable parts. The combination of toggles shown also properly control the speed of the type carrier whereby it rapidly decreases at the end of the stroke and prints by pressure in contradistinction to impact.

After the bell crank lever has been brought to rest, there is a reverse force brought into play to break the toggles due in part to the reversal of this condition, and there is thus produced in this type of action a real live force due in part to the momentum of the weight 47 which is very different in its action from that of other forms of type actions.

At the lower end of the type carrier 5 is a projection or arm 53, integrally formed therewith which is designed to coöperate with a curved universal bar 54 extending beneath the bracket adjacent the segment supporting the type carriers, as shown in Fig. 2. This universal bar is so mounted on an arrangement of parallel links 55 and 56 as to give all parts of it a substantially equal and vertical movement. Connected to a shaft 57, to which one of the sets of links 56 is secured, is a downwardly extending arm 58, the lower end 60 of which is connected, by a pull wire 61, with the escapement rocker 14.

From the above it will be clear that by depressing the key at the forward end of the key lever, motion will be transmitted, through the pull wire 46, to rotate the clip or lever 43, which will in turn rotate the bell crank lever 38 about its pivotal support 40. As the bell crank lever moves rearward the link 36 connected with the upper part thereof tends to straighten the toggle, formed by the links 32 and 30, connected at its movable end to the type carrier 5. However, as these links assume extended position, the link 36 and the upper arm 38 of the bell crank lever form a second toggle which also assumes extended position. The key lever energizes the momentum accumulator weight 47, and when the downward movement of the key lever is arrested by the stop bar 23 the momentum accumulator swings rearward to straighten the toggles completely and effect printing. The lost motion device between the clip 43 and the upper arm 38 of the bell crank lever permits the momentum accumulator to swing rearward and straighten the toggles independently of the arrest and subsequent movement of the key lever. Thus as the bell crank lever is actuated on depression of the key lever and is subsequently acted upon by the momentum accumulator, the link 38 will move out of engagement with the ears 44 of the lever 43. In this manner the key lever may be held down to its limit of movement and the type carrier will complete its path of travel to effect the printing and move out of engagement with the platen, regardless of whether or not the key lever is released, thus relieving the key lever of work during the pressure printing operation. The stop 51, however, coacting with the lower arm 48 of the bell crank lever, arrests the rearward or actuating movement of the accumulator to prevent overthrow of the toggles and also imparts a certain resiliency to the action which, with the inherent resiliency of the

material and return spring 62, will tend to return the parts to normal position shown in Fig. 1 until its rearward movement is arrested by a silencing pad 63 at the upper part of the segment.

From the above it will be seen that the momentum accumulator takes up the energy applied to the key lever in operation and subsequently delivers the energy to the type carrier to perform its printing function after the movement of the key lever has been arrested by the stop.

While the degree of impression is regulated to a certain extent according to the length of throw of the type carrier by the adjustment of the block 33, the striking of a key lever with a greater force, as when making a plurality of carbon copies, will be multiplied to some extent in an action of this kind, for the momentum of the momentum accumulator will increase according to the speed or force with which the key is struck.

As the momentum accumulator is free to continue its rearward movement after the key lever has been arrested in its downward movement, due to the loose connection between the bell crank lever and the link 43, it will swing rearward to the dot-dash position, thus straightening both sets of toggles and effecting the printing in a rapid and noiseless manner and with great pressure.

When the type bar is closely adjacent the platen, or just prior to the moment when the turned-over ears 44 and the upper arm 38 of the bell crank lever separate, the lower projection 53 on the type carrier coacts with the universal bar to actuate the same and transmit motion through the links 56 and universal bar rock shaft 57 to the dog rocker 14 and trip the escapement. The printing operation, however, is so rapid that the inertia of the carriage will not be overcome until after printing is effected.

Referring now to the modification shown in Fig. 2, the general principles of operation of the several mechanisms are substantially the same, although the intervening mechanism between the key lever and the type bar has been changed in order to obtain a very light initial touch. In this form, as in the one previously described, each type bar 5 is pivotally mounted in a segment 25 and is guided in its reciprocating movements by a curved projection or arm 27 passing through a hole in the segment.

At the upper end of the type bar, preferably at the point 28, is connected a link 30, the opposite end of which is connected to a second link 32, which in turn has its opposite end pivotally mounted in the rearward end of an adjustable bracket 33 mounted in the front wall 69 of the frame of the machine. These links together constitute a toggle, adapted to exert great pressure upon and also limit the rearward movement of the type bar. Connected with the middle part of this second link 32 is a short link 36, the opposite end 70 of which is pivotally connected to the upper arm 71 of an L-shaped member or bell crank lever pivotally mounted at 72 on an adjustable bracket 73 supported by a second transverse part or brace 74 in the machine. The lower or short arm 75 of the bell crank lever is provided with a turned-over portion 76 adapted to coact with a stop bar 77 to limit the rearward movement of its upper arm. This stop bar is rigidly secured to the transverse part or brace 74 supporting the adjustable bracket 73.

To the under side of the upper transverse brace 69 in the frame of the machine is a third bracket or hanger 78 adapted to support a bell crank lever 80, the short arm 81 of which is pivotally connected with the upper end of the pull wire 82, the lower end of which is pivotally connected to the forward part of the key lever 16. The upper arm 71 of the first bell crank lever and the lower arm 80 of the second bell crank lever are adapted to have a rocking or heel and toe movement as the key lever 16 is depressed, in which both parts move toward the rear of the machine. This arrangement constitutes a loose connection or lost motion device to permit an independent movement of the key lever and type carrier similar to that above explained in connection with the first modification. It will be perfectly clear from the drawings that a rearward movement of the upper arm 71 of the bell crank lever will tend to straighten the toggle formed thereby, together with the short link 36, as well as the toggle intermediate the type bar and the adjustable hanger 33. During this rearward movement the momentum accumulator 47 as before acquires a certain momentum sufficient to carry the rocking parts of the bell crank levers out of engagement with each other after the downward movement of the key lever has been arrested. This momentum is sufficient to carry the type from a point closely adjacent the platen shown in dotted lines into contact therewith to effect printing, as shown by the dot-dash line. Simultaneously with the printing moment the turned-over ear 76 at the lower part of the bell crank lever coacts with the cushion stop 77 which, with the resiliency of the material of which the action is composed, and the aid of the return spring 83 intermediate the type carrier and the link, will return the parts, or at least move the type out of engagement with the platen independently of the release or any subsequent movement of the key lever. In actual operation, how-

ever, the key lever would be released and return to the position shown, in which case the parts of the type action would all return to their normal inactive positions.

The lower end of the type carrier 5 is adapted to coact with the curved universal bar 54 in the manner described in connection with Fig. 1. This will actuate the universal bar and, through the connections 61 with the escapement rocker 14, trip the escapement dog at the proper moment. It is to be understood in connection with this universal bar mechanism in both embodiments that it is not operated until after the movement of the key lever has been arrested. This serves to make a spacing of the carriage for succeeding characters independent of the release operation of the key lever. In other words, if the operator should hold the key lever down the type carrier would move to the printing point under the action of the momentum accumulator and operate the escapement mechanism through the universal bar and return to a point where the bell crank levers would again engage the coacting actuating member, thus spacing the carriage independently of the subsequent movement of the key lever.

As the operation and method of use of a type action of this character is believed to be perfectly clear from the above description, a reiteration thereof is believed to be unnecessary.

It will be seen that the present invention provides a simple and practical type action which will be silent, rapid and efficient in use, accomplishing, among others, all of the objects and advantages above set forth.

As many changes could be made in the above construction and many apparently widely different embodiments of this invention could be made without departing from the scope thereof, it is intended that all matter contained in the above description or shown in the accompanying drawings shall be interpreted as illustrative and not in a limiting sense.

Having described my invention, what I claim as new and desire to secure by Letters Patent is:

1. In a typewriting machine, in combination, a curvilinearly movable type carrier, and means to effect a printing movement thereof, said means including a momentum accumulator associated with said type carrier for effecting a relatively short movement of the latter during a relatively long movement of said momentum accumulator.

2. In a typewriting machine, in combination, a normally retracted type carrier movable upward and rearward toward its printing plane, and operating and speed-controlling means to effect such movement, said means including a momentum accumulator having a speed-reducing and power-increasing operative connection with the type carrier.

3. In a typewriting machine, in combination, a front strike swinging type carrier, and operating means to effect a continuous movement thereof to its printing plane, said means including a momentum accumulator having a lost-motion connection with an actuating key and having a power-increasing leverage connection with the type carrier during the final travel of the latter.

4. In a typewriting machine, in combination, a platen, a curvilinearly movable type carrier, an actuating key for the latter, and an operative connection between said key and said type carrier for effecting printing movement of the latter to a limit determined independently of said platen, said connection including means to store energy upon actuation of said key and to expend such energy to move said type carrier.

5. In a typewriting machine, in combination, a platen, a curvilinearly movable type carrier, an actuating key for the latter, and an operative connection between said key and said type carrier for effecting a continuous movement of the latter to a printing limit determined independently of said platen and of said actuating key, said connection including means to store energy upon actuation of said key and to expend such energy to move said type carrier.

6. In a typewriting machine, in combination, a platen, a curvilinearly movable type carrier, an actuating key for the latter, and operative connecting means between said key and said type carrier to effect printing movement of the latter to a limit determined by said means, said means including a momentum accumulator associated with said key and said type carrier in an operative relation to store energy during a predetermined movement of the former and to expend such energy to move the latter independently of said key.

7. In a typewriting machine, in combination, a curvilinearly movable type carrier, and means to effect a printing movement thereof to a limit established independently of said platen, said means including a momentum accumulator structurally associated with said type carrier for effecting a relatively short and forceful movement of the latter during a relatively long movement of said momentum accumulator.

8. In a typewriting machine, in combination, a normally retracted type carrier movable upward and rearward toward its printing plane, and operating and speed-controlling means to effect such movement to a limit established substantially independently of the platen, said means including a momentum accumulator having a speed-reduc-

ing and power-increasing operative connection with the type carrier.

9. In a typewriting machine, in combination, a platen, a curvilinearly movable type carrier, and means to effect printing movement of the latter to a limit determined independently of said platen, said means including a momentum accumulator associated with said type carrier in a relation to exert an increased force on the latter during final movement of said momentum accumulator.

10. In a pressure-printing typewriting machine, in combination, a curvilinearly movable type carrier, and means to effect a quick transposition thereof to a position adjacent its printing plane and at a speed gradually reduced during the printing portion of its travel, said means including a momentum accumulator associated with said type carrier in a relation to effect the printing movement thereof.

11. In a pressure-printing typewriting machine, in combination, a curvilinearly movable type carrier, and means to effect a quick transposition thereof to a position adjacent its printing plane and at a speed gradually reduced during the final portion of said transposition and uninterruptedly to move said type carrier to a printing limit established by said means, said means including a momentum accumulator operatively associated with said type carrier for effecting the final movement thereof to said printing limit.

12. In a pressure-printing typewriting machine, in combination, a curvilinearly movable type carrier, an actuating key therefor, operative connecting means between said key and said type carrier to effect a quick transposition of the latter to a position adjacent its printing plane and at a speed gradually reduced during the final portion of its travel, a stop to arrest said actuating key, said connecting means including a lost-motion device to permit subsequent independent movement of said type carrier, and a momentum accumulator associated with said means in a relation to effect such subsequent movement of said type carrier after the arrest of said actuating key.

13. In a pressure-printing typewriting machine, in combination, a curvilinearly movable type carrier, an actuating key therefor, operative connecting means between said key and said type carrier to effect a quick transposition of the latter to a position adjacent its printing plane and at a speed gradually reduced during the final portion of its travel, a stop to arrest said actuating key, said connecting means including a lost-motion device to permit subsequent independent movement of said type carrier, a momentum accumulator operatively associated with said means for effecting such subsequent movement of said type carrier, and a universal bar positioned to be actuated by said type carrier during movement of the latter effected by said momentum accumulator.

14. In a typewriting machine, in combination, a curvilinearly movable type carrier, energy-storing means, an actuating key to effect a storage of energy in said means, and means to convert gradually all of such stored energy into relatively slow printing movement of said type carrier.

15. In a typewriting machine, in combination, a curvilinearly movable type carrier, an inking ribbon positioned in the path of travel of said type carrier adjacent the limit of movement thereof, energy-storing means, an actuating key to effect a storage of energy in said means, and means to convert gradually such stored energy into relatively slow and forceful movement of said type carrier while the latter is in contact with said ribbon.

16. In a typewriting machine, in combination, a pivotally mounted type carrier, an actuating key therefor, and operative connecting means between said parts including a normally flexed toggle, one member of which has a pivotal connection with said type carrier adjacent the free end thereof.

17. In a typewriting machine, in combination, a pivotally mounted type carrier, an actuating key therefor, and operative connecting means between said parts including a normally flexed toggle, one member of which has a pivotal connection with said type carrier adjacent the free end thereof and another member of which has an axis adjustable to vary the position of said type carrier when the toggle is extended.

18. In a typewriting machine, in combination, a platen, a swinging type carrier having a printing travel limited independently of the platen, a key lever, means to arrest the downward movement of said key lever, a toggle connected at one end to said type carrier, a momentum accumulator associated with said toggle and adapted to straighten the toggle after the key lever has been arrested, and resilient means associated with said toggle to withdraw the type carrier from the end of its path of travel independently of the return movement of the key lever.

19. In a typewriting machine, in combination, a swinging type carrier having a limited path of travel to a normal printing plane, a key lever having a limited path of travel to actuate said type carrier, intermediate mechanism comprising a plurality of toggles to control the rate of travel of said type carrier, and means to straighten said toggles to effect the printing after the key lever has been arrested in its downward movement.

20. In a typewriting machine, in combina-

tion, a swinging type carrier having a limited path of travel to a normal printing plane, a key lever having a limited path of travel adapted to actuate said type carrier, intermediate mechanism comprising a plurality of toggles to control the rate and extent of travel of said type carrier, means to straighten said toggles to effect the printing after the key lever has been arrested in its downward movement, and spring means to return the parts to normal position.

21. In a typewriting machine, in combination, a swinging type carrier having a limited path of travel, a key lever therefor, and intervening mechanism including a plurality of toggles one of which is secured to said type carrier at one end and to a relatively fixed part of the machine at its other end, the other toggle being directly connected with one of the links of said first-mentioned toggle and adapted to straighten the same as it assumes straightened position itself.

22. In a typewriting machine, in combination, a swinging type carrier, a key lever therefor, means to arrest the downward movement of the key lever, and intervening mechanism to transmit motion from one to the other, including a plurality of toggles, one of which is directly connected with one of the links of the other and adapted to straighten the same as it assumes straightened position itself after the downward movement of the key lever has been arrested.

23. In a typewriting machine, in combination, a swinging type carrier, a key lever therefor, means to arrest the downward movement of said key-lever, intervening mechanism to transmit motion from one to the other including a plurality of toggles one of which is directly secured at one end to said type carrier, the other toggle being connected with one of the links of said first mentioned toggle and adapted to straighten the same as it assumes straightened position itself subsequent to the arresting of the downward movement of said key lever, and means directly connected with one of said toggles for moving both of said toggles to straightened position.

24. In a typewriting machine, in combination, a swinging type carrier having a limited path of travel, a key lever therefor, means to arrest the downward movement of said key lever, intervening mechanism to transmit motion from one to the other, including a plurality of toggles one of which is connected with one of the links of the other and adapted to straighten said toggle as it assumes straightened position itself, a momentum accumulator directly connected with one of said toggles for moving both of the latter to straightened position after the downward movement of the key lever has been arrested, and a lost motion device intermediate two of said parts whereby this independent movement is permitted.

25. In a typewriting machine, in combination, a swinging type carrier, a key lever therefor, means to arrest the downward movement of the key lever, intervening mechanism to transmit motion from one to the other, including a plurality of toggles, a momentum accumulator directly connected with one of said toggles adapted to move both of the toggles to straightened position after the downward movement of the key lever has been arrested, and a universal bar to be actuated by one of said parts after the downward movement of said key lever has been arrested.

26. In a typewriting machine, in combination, a swinging type carrier, a key lever therefor, a stop to arrest the downward movement of the key lever, intervening mechanism between said parts, including a toggle, a bell crank lever, a momentum accumulator directly connected with one of said parts for moving the toggle to straightened position after the key lever has been arrested, and a universal bar to be actuated directly by said type carrier.

27. In a typewriting machine, in combination, a swinging type carrier having a limited range of movement, a key lever therefor, means to arrest the downward movement of the key lever, intervening mechanism, including a toggle, between said type carrier and a fixed part of the machine, and a second toggle including a bell crank lever connected with one of the links in the first mentioned toggle whereby as the key lever is depressed said toggle will tend to assume a straightened position.

28. In a typewriting machine, in combination, a swinging type carrier having a limited range of movement, a key lever therefor, a stop to limit the downward movement of the key lever, intervening mechanism including a toggle between the type carrier and a fixed portion of the machine, a second toggle connected with said first-mentioned toggle, said second-mentioned toggle being formed by one arm of a bell crank lever, a connection therewith and with the key lever whereby as the key lever is depressed said toggles will tend to assume straightened position, and means associated with one of said toggles to move them to straightened position after the downward movement of the key lever has been arrested.

29. In a typewriting machine, in combination, a swinging type carrier having a limited range of movement, a key lever therefor, means to limit the downward movement of the key lever, intervening mechanism including two toggles, one of which includes a bell crank lever, the bell crank lever being connected with said key lever whereby

as the key lever is depressed said toggles will tend to assume straightened position, means associated with one of said toggles to complete their movement to straightened position after the downward movement of the key lever has been arrested, and a universal bar to be actuated by one of said parts.

30. In a typewriting machine, in combination, a swinging type carrier having a limited range of movement, a key lever therefor, means to limit the downward movement of the key lever, intervening mechanism including two toggles, one of which includes a bell crank lever, the bell crank lever being connected with said key lever whereby as the key lever is depressed said toggles will tend to assume straightened position, means associated with one of said toggles to complete their movement to straightened position after the downward movement of the key lever has been arrested, and a universal bar in the path of travel of said type carrier to be actuated thereby.

31. In a typewriting machine, in combination, a swinging type carrier having a limited range of movement, a key lever therefor, a stop for the downward movement of the key lever, intervening mechanism including a toggle between the type carrier and a fixed part of the machine, a second toggle connected with said first-mentioned toggle and acting at an angle thereto, a bell crank lever included in said second-mentioned toggle, and connected with said key lever, means associated with one of said toggles to complete its movement to straightened position after the downward movement of the key lever has been arrested, and a universal bar to be actuated directly by one of said parts.

32. In a typewriting machine, in combination, a swinging type carrier having a limited range of movement, a key lever therefor, a stop for the downward movement of the key lever, intervening mechanism including a toggle between the type carrier and a fixed part of the machine, a second toggle connected with said first-mentioned toggle and acting at an angle thereto, a bell crank lever included in said second-mentioned toggle, and connected with said key lever, means associated with one of said toggles to complete its movement to straightened position after the downward movement of the key lever has been arrested, and a universal bar to be actuated directly by the type carrier after the downward movement of the key lever has been arrested.

33. In a typewriting machine, in combination, a swinging type carrier having a limited range of movement, a key lever therefor, a stop for the downward movement of the key lever, intervening mechanism including a toggle having a free end connected with the type carrier, a second toggle connected with one of the links of the first-mentioned toggle, means associated with said toggles to complete their movement to straightened position after the downward movement of the key lever has been arrested, a universal bar to be actuated by one of said parts, and a lost motion device in said mechanism to permit said toggle to straighten and return to flexed position independent of the release of the key lever, said universal bar being actuated after the downward movement of the key lever has been arrested.

34. In a typewriting machine, in combination, a swinging type carrier, a key lever therefor, means to arrest the downward movement of the key lever, intervening mechanism including a bell crank lever loosely connected with said key lever to permit independent movement, and means associated with one of said parts to accomplish the independent movement of the bell crank lever to move the type carrier to printing position after the downward movement of the key lever has been arrested.

35. In a typewriting machine, in combination, a swinging type carrier having a limited range of movement, a key lever therefor, a stop for arresting the downward movement of the key lever, intervening mechanism including a bell crank lever, a lost motion device between the bell crank lever and the key lever to permit independent movement, and means associated with said bell crank lever to accomplish an independent movement thereof to move the type carrier to printing position after the downward movement of the key lever has been arrested.

36. In a typewriting machine, in combination, a swinging type carrier having a limited range of movement, a key lever therefor, a stop for arresting the downward movement of the key lever, intervening mechanism including a bell crank lever, a lost motion device between the bell crank lever and the key lever to permit independent movement, and means associated with said bell crank lever to accomplish an independent movement thereof to move the type carrier to printing position after the downward movement of the key lever has been arrested, said bell crank lever being of resilient material whereby it is permitted to rebound to withdraw the type carrier from printing position.

37. In a typewriting machine, in combination, a swinging type carrier, a key lever therefor, intervening mechanism including a bell crank lever and a toggle, one of said parts being loosely connected with one of the other of said parts to permit an independent movement, and a weight associated

with said bell crank lever to accomplish an independent movement thereof to force the type carrier through said toggle to printing position independently of the release of the key lever.

38. In a typewriting machine, in combination, a swinging type carrier, a key lever therefor, a toggle having its free end connected with the type carrier and movable to straightened position for limiting the movement of the type carrier, a second toggle connected with said first-mentioned toggle, and a lost motion device associated with one of said toggles whereby the toggles will be moved to straightened position after the downward movement of the key lever has ceased.

39. In a typewriting machine, in combination, a swinging type carrier, a key lever therefor, a toggle connected with said type carrier, a second toggle connected with said first-mentioned toggle adapted to assume straightened position, said second-mentioned toggle being partially formed by one arm of a bell crank lever, and a stop for the other arm of the bell crank lever to prevent overthrow of the toggles.

40. In a typewriting machine, in combination, a swinging type carrier, a key lever therefor, a toggle connected with said type carrier, a second toggle connected with said first-mentioned toggle adapted to assume straightened position, said second-mentioned toggle being formed by one arm of a bell crank lever, a stop for the other arm of the bell crank lever to prevent overthrow of the toggles, and means associated with one of said toggles to urge the toggles into straightened position after the downward movement of the key lever has ceased.

41. In a typewriting machine, in combination, a platen, a swinging type carrier, a key lever therefor, intervening mechanism to gradually increase and then gradually decrease the rate of movement whereby it silently coacts with the platen, and a universal bar in the path of travel of said type carrier.

42. In a typewriting machine, in combination, a swinging type carrier, a key lever therefor, intervening mechanism to gradually increase and then gradually decrease its rate of movement whereby it silently coacts with the platen, and a guide arm on said type carrier adapted to prevent lateral movement thereof.

43. In a typewriting machine, in combination, a swinging type carrier, a key lever therefor, intervening mechanism to gradually increase and then gradually decrease its rate of movement whereby it silently coacts with the platen, a perforated segment on which said type carrier is mounted, and a guide arm on said type carrier passing through a perforation whereby lateral movement of the type carrier is prevented.

44. In a typewriting machine, in combination, a swinging type carrier, a key lever therefor, intervening mechanism to gradually increase and then gradually decrease its rate of movement whereby it silently coacts with the platen, a projection on said type carrier and a universal bar above said projection to be actuated thereby.

45. In a typewriting machine, in combination, a swinging type carrier, an actuating key therefor having its travel limited independently of said type carrier, operative connecting means between said key and said type carrier for effecting movement of the latter to a position adjacent its printing plane and at a speed gradually reduced during the final portion of its travel, said means including a momentum accumulator associated with said type carrier in a relation to effect printing movement thereof after said actuating key reaches its limit of travel, and a universal bar in the path of movement of a part of said type carrier and positioned to be actuated thereby during the printing movement thereof effected by said momentum accumulator.

46. In a typewriting machine, in combination, a plurality of radially arranged swinging type carriers, a supporting segment therefor having a plurality of apertures, and curved guiding means associated concentrically with said type carriers and passing through said apertures to prevent lateral displacement of the former, said guiding means being of a dimension to coact with said segment in all positions of said type carriers.

47. In a front strike typewriting machine, in combination, a platen, a plurality of radially disposed swinging type carriers normally disposed at an angle approximately 45 degrees to the horizontal, and operating means for said type carriers including toggle links to control the speed and pressure of said type carriers when actuated, and to limit the printing movement thereof substantially independently of said platen.

48. In a typewriting machine, in combination, a pivotally mounted type carrier, an actuating key therefor, and operative connecting means between said parts including a power transmitting member having a pivotal connection with said type carrier adjacent the free end of the latter and arranged for disposal at substantially right angles thereto at the printing moment.

49. In a typewriting machine, in combination, a pivotally mounted type carrier, an actuating key therefor, and operating connecting means between said parts including a thrust member having a pivotal connection with said type carrier and a pull member

490

having a connection with said key and a bell crank lever operatively interposed between said thrust and pull members, said thrust member being further connected and arranged to extend at substantially right angles to the body of said type carrier when the latter reaches printing position.

In testimony whereof I affix my signature, in the presence of two witnesses.

NILS H. ANDERSON.

Witnesses:
FRANCIS K. GUY,
EDWARD F. SLAVIN.

491

Oct. 16, 1923.

1,471,152

G. G. GOING

TYPEWRITING MACHINE

Filed Aug. 11, 1919

3 Sheets-Sheet 1

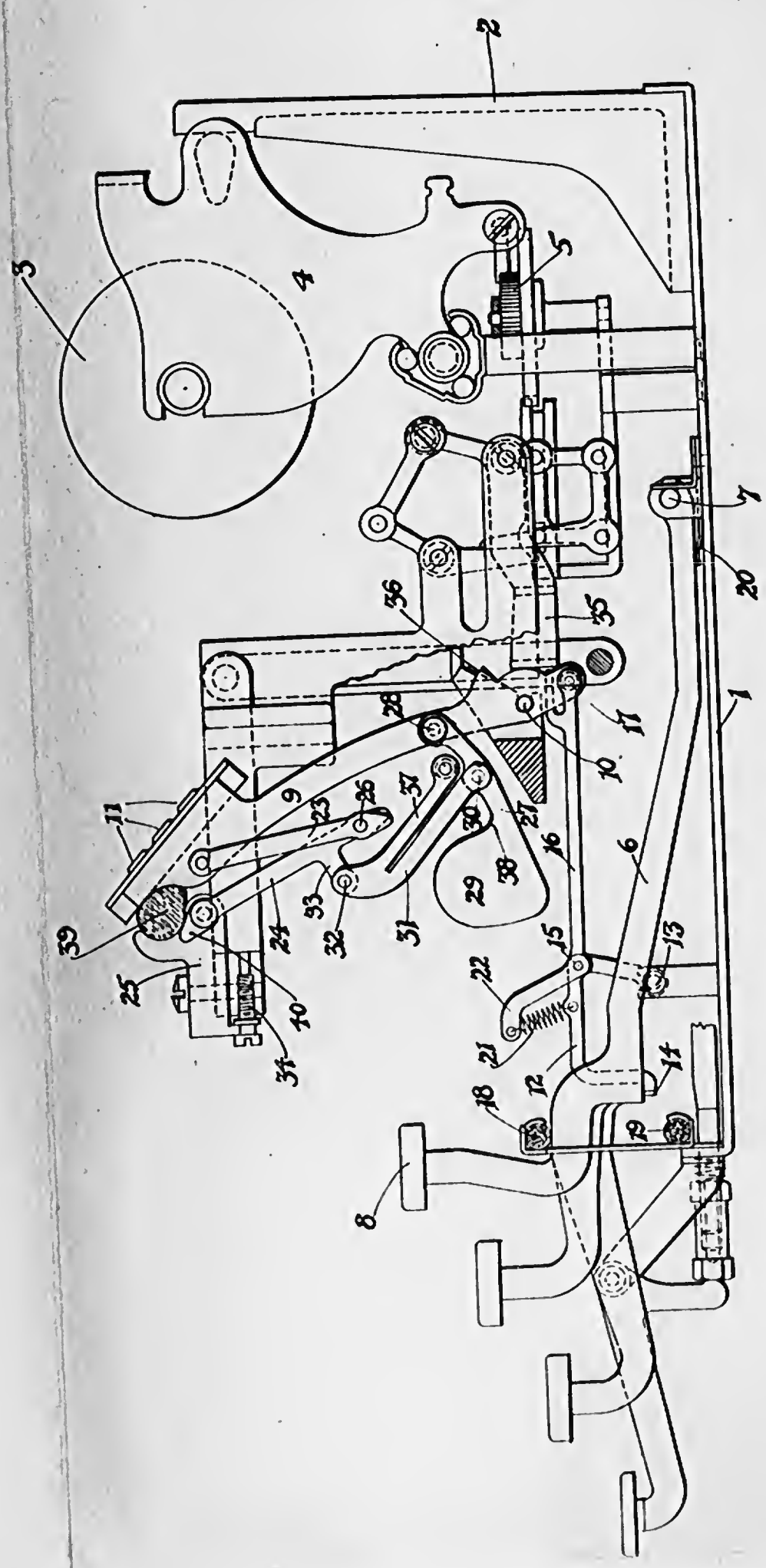

Fig. 1

INVENTOR
G. G. Going
BY
Dull, Warfield & Dull
ATTORNEY

492

Oct. 16, 1923. 1,471,152

G. G. GOING

TYPEWRITING MACHINE

Filed Aug. 11, 1919 3 Sheets-Sheet 2

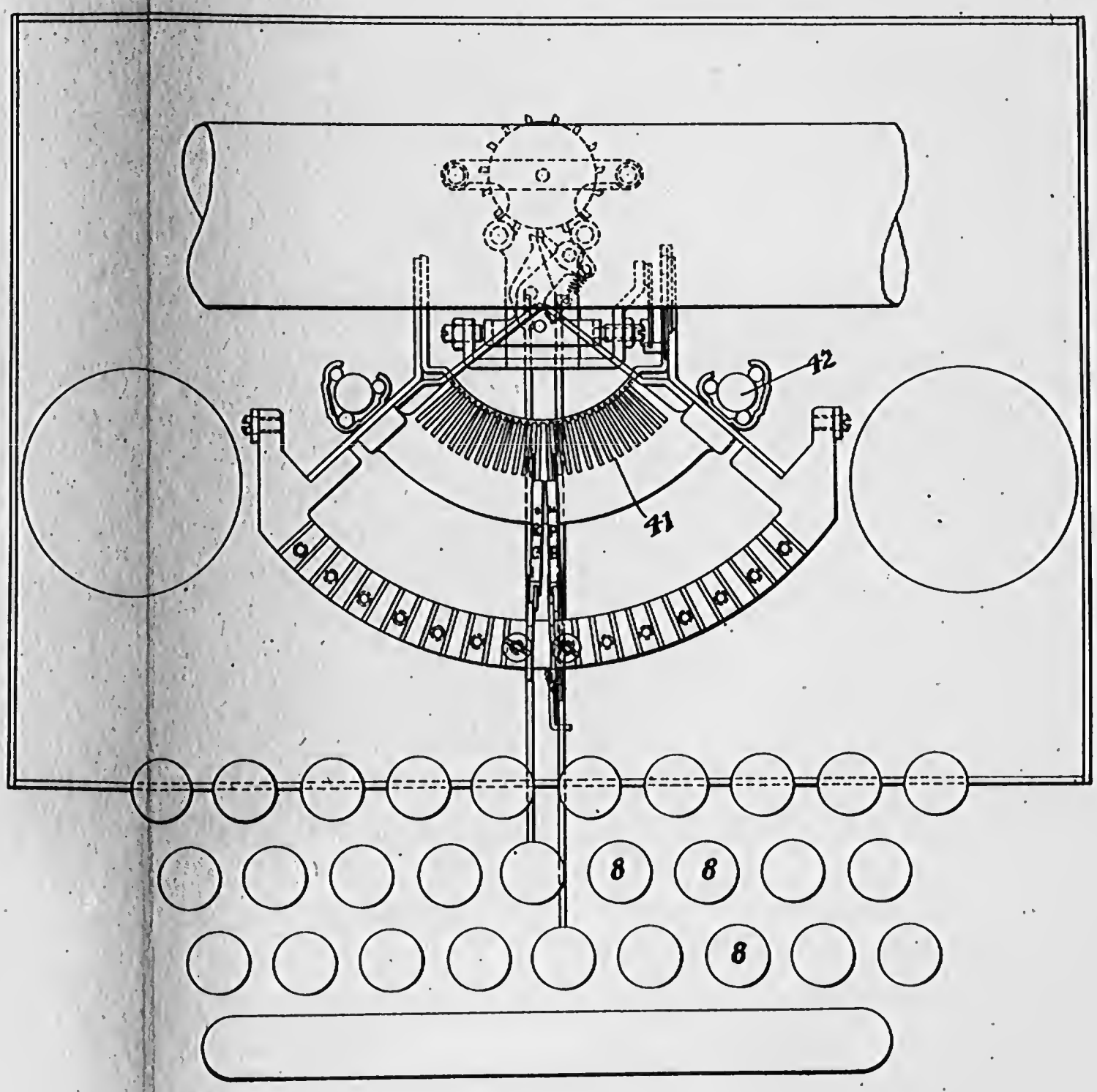

Fig. 2

INVENTOR
G. G. Going
BY
Duell, Warfield & Duell
ATTORNEY

493

Oct. 16, 1923. 1,471,152

G. G. GOING

TYPEWRITING MACHINE

Filed Aug. 11, 1919 3 Sheets-Sheet 3

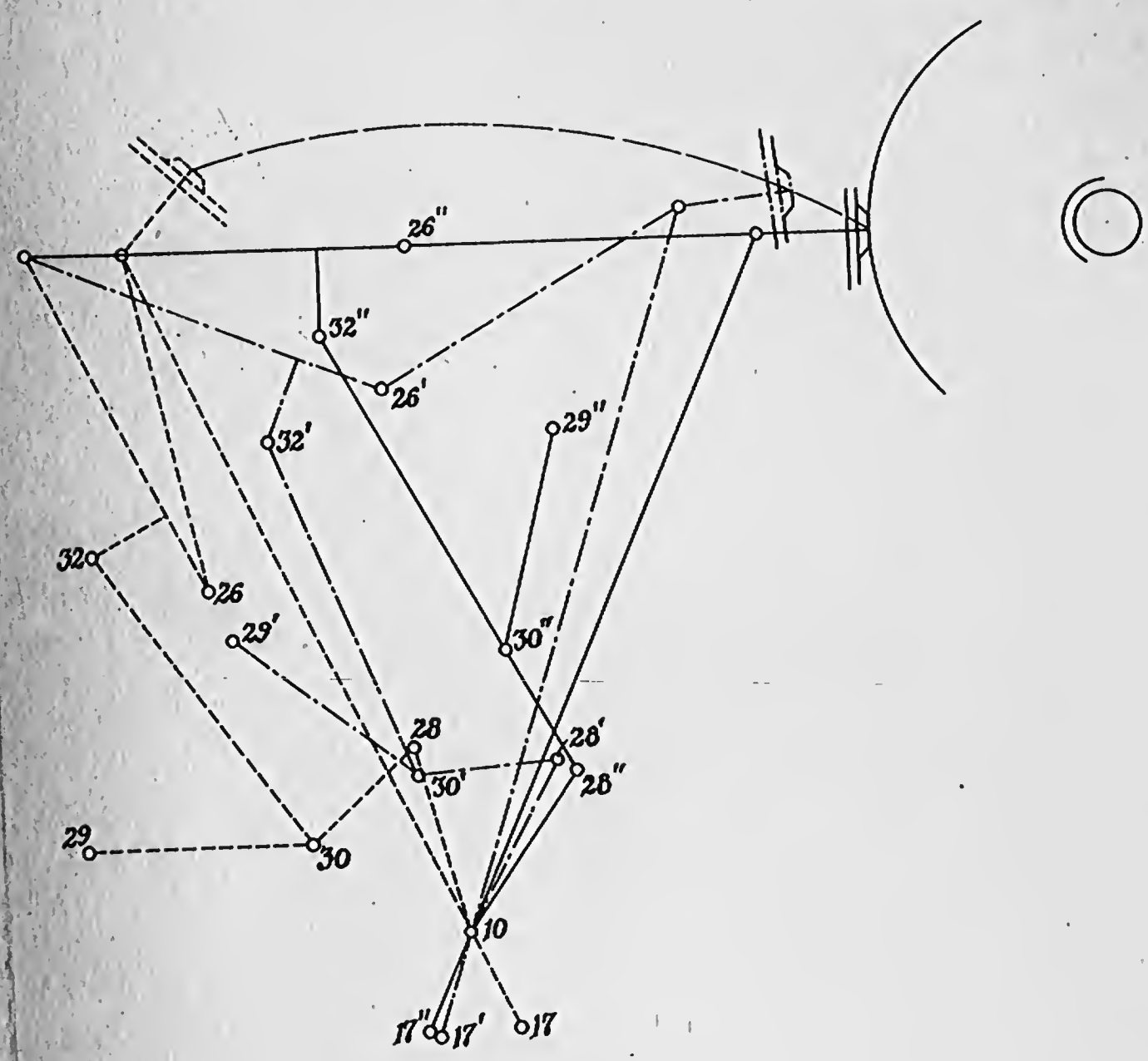

Fig. 3

INVENTOR
G. G. Going
BY
Duell, Warfield & Duell.
ATTORNEY

Patented Oct. 16, 1923. 1,471,152

UNITED STATES PATENT OFFICE.

GEORGE G. GOING, OF MIDDLETOWN, CONNECTICUT, ASSIGNOR, BY MESNE ASSIGNMENTS, TO THE NOISELESS TYPEWRITER COMPANY, INC., A CORPORATION OF DELAWARE.

TYPEWRITING MACHINE.

Application filed August 11, 1919. Serial No. 316,609.

To all whom it may concern:

Be it known that I, GEORGE GOULD GOING, a citizen of the United States, residing at Middletown, in the county of Middlesex and State of Connecticut, have invented certain new and useful Improvements in Typewriting Machines, of which the following is a full, clear, and exact description, such as will enable others skilled in the art to which it appertains to make and use the same.

This invention relates to typewriting machines, and is particularly directed to an improved type action capable of mechanically and functionally perfected embodiment in a relatively small size and light weight writing machine.

It is an object of the invention to provide a simplified and improved type action including a key lever and type bar and a train of actions therebetween, operable to effect printing without the objectionable recurrent noises of staccato impact by the type bars against the backed paper.

It is a further object to provide a mechanism of the character mentioned which is capable of embodiment to occupy a relatively small space, and retain the characteristic advantages of each "touch" and rapid operation, combined with the advantage of substantially noiseless printing.

Another object is to provide a typewriting machine having a type action of the character indicated which is structurally superior and functionally advantageous.

Other objects and advantages of the invention will be in part noted hereinafter in connection with the following description of the accompanying drawing which illustrates a typical, but preferred, embodiment of the invention and in which—

Fig. 1 is a side view taken through the machine representing the structure and association of operating parts including a key lever and type bar and the improved train of connections therebetween, and

Fig. 2 is a fragmentary top view of the machine including the type action shown in Fig 1, and Fig. 3 is a diagrammatic representation of the major parts of the type action in different positions, certain of the numerals of identification having a prime for intermediate position and a second for final position.

The supporting structure of the typewriter includes a base 1 and a rear plate 2. Adjacent to the latter there is provided a platen 3 mounted to rotate on and travel longitudinally with a carriage 4. The letter space movement of the carriage may be governed by an escapement mechanism 5 in a well known manner.

The type action includes a key lever 6 pivoted at its rear end at 7 and having a depressible finger key 8 at its fore end and a type bar 9 pivoted at its lower end on a fulcrum 10 and having type characters 11 at its free end. The key-lever and type bar are connected by an angular U-shaped link 12 pivoted to rotate at 13 and having an offset on its lower fore end 14 positioned below for actuation by the lever 6. Link 12 is further connected at 15 with a horizontally disposed link 16, the latter in turn connected at its rear end by a pivot 17 to the type bar at the end of the latter below the fulcrum 10. As thus far described, it will be apparent that the depression of the key lever 6 rocks link 12 about its axis of motion 13 and thereby pulls forward the link 16 to swing type bar 9 toward platen 3. The limits of travel of the key lever 6 are set by two cushion stops 18 and 19; stop 18 arresting the elevating of the lever and stop 19 arresting its depression. Furthermore, stop 19 is so located as to engage and arrest the key lever at a time when the attendant movement of the link 16 has been insufficient to swing the type bar through its full stroke to print, and continued movement of the type bar is permitted on account of the lost motion action between the offset 14 of link 12 and its corresponding part of the lever 6. Restoration of the parts to the position shown in Fig. 1 may be accomplished by a spring 20 acting below the rear end of lever 6 and by a coil spring 21 connecting link 12 with a vertical offset arm 22 on or integral with link 16. It will be apparent that spring 21 tends to draw together the points of link 12 and arm 22 to which it is connected and therefore to elevate the key lever from depressed position and to withdraw the type bar from printing position.

To effect the printing, that is the legible impression of the type carried by the bar 9 against the paper, and to accomplish this result substantially noiselessly, there is provided additional or motion governing means connected to the type bar adjacent its free end and adjacent its fixed end and to a rigid

element of the machine in front of the platen.

As shown in the drawings, a link 23 is pivoted to the free end of type bar 9, preferably in the rear of the type head 11, and a link 24 is pivotally connected to a rigid element 25 which may constitute a part of the type segment frame. Links 23 and 24 are also pivotally connected to each other adjacent their ends 26 and are of a length to constitute an extended toggle when the type bar is moved to print. There is also provided a lever 27 pivotally connected at 28 to the type bar and having at its fore end an integral or added weight 29 constituting a momentum accumulator, which acts to store energy during the initial depression of the key lever and expend such energy in continuing the stroke of the type bar against the platen to effect the printing. In order both to render the movement of the momentum accumulator 29 such that the initial storage of energy therein will be without disadvantageous effect upon the touch of the key lever and to effect the dissipation of the stored energy through a power-increasing leverage for transmitting pressure behind the free end of the type bar, lever 27 is pivotally connected at 30 with a link 31, and the upper end of the latter is in turn pivotally connected at 32 to a slightly offset branch 33 of the link 24.

In operation, the depression of the lever 6 effects a direct swinging movement of the type bar at accelerated speed and particularly on account of the relative proximity of the pivot point 17 and the fulcrum 10, it will be apparent that the touch at the key is rendered light. The swinging movement of the upper part of the type bar will also entail an extension of the toggle links 23 and 24 and consequently a bodily elevation of the link 31 which will thereby effect the rotation of the momentum accumulator 29 about its axis 28 at the same time that the momentum accumulator and its lever 27 are bodily moved on account of its attachment to the type bar. In the embodiment shown in the drawing, the parts are designed so that the free end, that is the type end of the bar 9, is moved at high speed during the period of force transmission thereto from the key lever, and this connection is maintained to the type bar for the major part of its travel toward the platen. The arresting engagement of the key lever by stop 19 then immediately transfers the actuating force for the type bar from the key lever to the momentum accumulator 29. The latter thereafter moves at a constant or decelerating speed and therefore during the period of energy expenditure by the weight 29 the speed of the free end of the type bar is rapidly but smoothly decreased while the effectiveness of force transmission, on account of the approach of the links 23 and 24 to form an extended toggle, rapidly but smoothly increases toward infinity.

Practically considered, this operation results in a quick positioning of the type bar closely adjacent the platen at an accelerated speed and an immediate, but nevertheless not abrupt, diminution and deceleration of the speed of the type bar and its final approach to and movement against the platen 3 slowly but powerfully. Moreover, the movement of the type bar toward the platen on its printing stroke may be substantially limited by the extension of the toggle links 23 and 24, and the latter is preferably connected with the element 25 in turn mounted for relative adjustment through screws 34. The type bar is thus quickly brought rearward but is moved into contact with the ribbon against the paper at a relatively slow speed and therefore without substantial noise of impact, and the actual printing movement is accomplished under relatively heavy pressure by the continued utilization of energy stored in the weight 29.

The escapement for the mechanism of the carriage 4 may be adjusted for actuation by the type bar 9 during the period of travel of the latter under the force of the weight 29. In the particular embodiment of the invention illustrated the escapement mechanism may include a lever 35 having its fore end located near and engaged by a shoulder 36 of the type bar. The printing and the escapement actuation may thus both be effected by the supplemental energy stored in the weight 29 and dissipated through the train of connections 31, 24 and 23.

In order, further, to prevent overthrow of the toggle and to arrest silently the final swinging movement of the weight 29, the link 31 has a resilient arm 37 with a stud on its extremity in a position to be silently engaged by the cam edge 38 of the lever 27. By this construction the edge 38 is brought silently into engagement with the stud on cushion arm 37 just prior to the consummation of the printing. Consequently, weight 29 is positively but resiliently arrested and its return movement aided by the rebound of the arm 37.

To arrest the free end of the type bar on its return stroke there is provided a cushion stop 39 held in a suitable part of the type bar segment. The cushion 39 may also if desired be arranged to limit the return movement of an extension 40 of the link 24.

Fig. 2 shows the relative arrangement of the type bar segment to the ribbon spools, to the platen and to the escapement mechanism. As represented, the type segment is arranged in an arc in front of the platen and in substantially the horizontal plane of the latter and the type bars are arranged radially from the printing point and are mounted

in a bottom comb guide 41. The type segment may be mounted for raising and lowering to different case positions on uprights 42. The finger keys 8 may be arranged in the conventional manner at the keyboard.

Having described my invention, what I claim as new and desire to secure by Letters Patent is:

1. In a typewriting machine, in combination, a platen, a key lever, a swinging type bar, operating connecting means between said key lever and type bar whereby the former actuates the latter, and a motion governing means kinematically linked to the type bar independently of said connecting means, including an independent energy storing member, and arranged to control the entire swing of the type bar toward the platen, storing energy during the initial movement and expending the same during the completion of the printing stroke.

2. In a typewriting machine, in combination, a platen to back the paper, a depressible key lever, a type bar, operative connecting means between said key lever and said type bar to start the latter toward the platen on the depression of the former, a stop to arrest depression of said key lever prior to the final movement of said type bar, said connecting means including a lost motion device to permit continued movement of said type bar after arrest of said key lever, and means independent of said connecting means to store energy during the interval of movement of said type bar by said key lever, said last mentioned means being associated with said type bar to expend its stored energy in effecting the final printing movement of said type bar.

3. In a typewriting machine, in combination, a platen to back the paper, a depressible key lever, a type bar, operative connecting means between said key lever and said type bar to start the latter toward the platen on the depression of the former, a stop to arrest depression of said key lever prior to the final movement of said type bar, said connecting means including a lost motion device to permit continued movement of said type bar after arrest of said key lever, and means independent of said connecting means to store energy during the interval of movement of said type bar by said key lever, said last mentioned means being associated with said type bar to expend its stored energy in effecting the final printing movement of said type bar through a speed reducing and power increasing connection.

4. In a typewriting machine, in combination, a platen, a pivoted type bar, a key lever, a direct connection between said key lever and said type bar to start movement of the latter upon depression of the former, means to store energy during the movement of said type bar by said key lever and expend energy thereafter to complete the printing stroke of said type bar, and means to limit the printing stroke of said type bar substantially independently of said platen, said energy storing means being associated with said type bar limiting means to expend its energy therethrough during the final travel of said type bar.

5. In a typewriting machine, in combination, a platen, a pivoted type bar having its free end normally spaced from the platen and capable of movement through an arc toward the same, a key lever, connecting means between said key lever and said type bar to start the latter on its travel toward the platen upon depression of the former and permit continued travel of said type bar independently of said key lever, means to limit the movement of said type bar substantially independently of said platen, and means independent of the connection between said key lever and said type bar to store energy during the earlier movement of said type bar and to expend such energy to effect the latter movement of said type bar.

6. In a typewriting machine, in combination, a platen, a depressible key lever, a pivoted type bar, operative connections between said key lever and said type bar to effect initial movement of the latter upon depression of the former and to permit continued movement of said type bar independently of said key lever, energy storing means connected to said type bar to gradually and increasingly store energy during movement of said type bar by said key lever, and also connected with said type bar to expend such stored energy to effect continued and final movement of said type bar for printing independently of said key lever.

7. In a typewriting machine, in combination, a pivoted type bar, a key lever and connections therebetween including an element pivotally connected to said type bar adjacent the axis of the latter, a weight pivotally connected to said type bar adjacent the axis of the latter but on the opposite side from the connection of said element, and connecting means between said weight and said type bar adjacent its free end.

8. In a typewriting machine, in combination, a pivoted type bar, a key lever, operative connecting means therebetween to start movement of the latter upon depression of said key lever and to permit continued movement of said type bar independently of said key lever, a toggle to silently arrest movement of said type bar on its printing stroke, and means connected with said type bar independently of said connecting means between the latter and said key lever to store energy during movement of said type bar by said key lever, and

also connected to expend such energy through a speed reducing and power increasing connection to complete the printing stroke of said type bar.

9. In a typewriting machine, in combination, a platen, a pivoted type bar, a key lever, operative connecting means between said type bar and said key lever to start movement of the former upon depression of the latter and to permit continued movement of said type bar independently of said key lever, and means independent of said connecting means to effect said continued movement of said type bar relatively slowly and relatively forcefully to effect printing by pressure and without noisy impact.

10. In a typewriting machine, in combination, a pivoted type bar, a weighted lever carried thereby to store energy during initial movement of said type bar and to expend such energy to effect final printing movement of said type bar, and means to silently cushion the final movement of said weighted lever.

11. In a typewriting machine, in combination, a platen, a key lever, a swinging type bar, operative connecting means between said key lever and type bar, a weighted lever having mechanical connections with said type bar independent of said connecting means, said weighted lever being arranged to be actuated by the swing of the type bar, and resilient means on said mechanical connection arranged to be moved into engagement when the type bar is in printing position whereby the energy in excess of that required to effect printing is silently expended.

12. In a typewriting machine, in combination, a pivoted type bar, a key lever, and operative connecting means therebetween including a substantially U-shaped member pivoted at one end and connected for actuation at its other end by said key lever, a link pivotally connecting said member and said type bar, said link having an offset extremity and a return spring connected between the offset end of said link and the medial portion of said member.

13. In a typewriting machine, in combination, a pivoted type bar, a key lever, operative connecting means therebetween to effect accelerated movement of said type bar upon depression of said key lever and to permit continued movement of said type bar independently of said key lever, and means independent of said connecting means to effect continued decelerated printing movement of said type bar.

14. In a typewriting machine, in combination, a pivoted type bar, a key lever, operative connecting means therebetween to effect accelerated movement of said type bar upon depression of said key lever and to permit continued movement of said type bar independently of said key lever, and means independent of said connecting means to effect continued decelerated printing movement of said type bar with augmented pressure.

15. In a typewriting machine, in combination, a platen, a type action comprising a plurality of pivoted type bars adapted to swing into printing position against said platen, a series of key levers having operating connections for actuating said type bars, and individual motion governing means, kinematically linked to each type bar independently of said operating connections, including an energy storing member and arranged to control individually the entire swing of its type bar as it approaches the platen; said operating connections each including parts normally engaged but separable to allow the continued motion of the type bar under the control of said motion governing means after the actuating key lever has come to rest.

16. In a typewriting machine, in combination, a platen, a type bar pivotally mounted adjacent one end and having type characters at its opposite end, a key lever, operative connections between said lever and said one end of said bar to effect movement of the latter towards said platen, and motion governing means including a toggle connected to said opposite end of said bar to limit the movement thereof toward said platen.

17. In a typewriting machine, in combination, a platen, a type bar pivoted adjacent one end and having type characters at its opposite end, a key lever, operative connections between said lever and said one end of said bar to effect movement of the latter toward said platen, and means including a toggle and a weight connected to said bar on the type-character side of its pivotal axis to continue movement of said bar independently of said key lever and substantially independently of the momentum of said bar and to limit the movement of the latter towards said platen.

18. In a typewriting machine, in sub-combination, a type bar having a pivotal axis adjacent one end and having type characters at its opposite end, an element pivoted to said bar between the axis and type end of the latter and having a substantially weighted free end, and link connections between the type end of said bar and said element to effect accelerated movement of the weighted end of said element about the point of connection of the latter to said bar during bodily movement of said element about the axis of said bar when the latter is actuated.

19. In a typewriting machine, in sub-combination, a type bar having a pivotal axis adjacent one end and having type characters at its opposite end, an element pivoted to

said bar between the axis and type end of the latter and having a substantially weighted free end, and link connections between the type end of said bar and said element to insure a relatively long movement of the weighted end of said element swinging about its point of pivotal connection with said bar contemporaneously with a relatively short movement of said bar swinging about its said axis.

20. In a typewriting machine, in combination, a platen, a type bar having a pivotal axis adjacent one end and having a type character at its opposite free end, a key lever, operative connections between said lever and said bar to effect relatively rapid movement of the free end of the latter toward the platen upon depression of the former, an element having a substantially weighted portion constituting means to store and expend energy, and operative connections between said bar and said element to effect initially slow but gradually accelerated movement of the weighted portion of the latter for storing energy during movement of said bar by said lever and to effect continued but substantially decelerated movement of said bar with augmented pressure by the weighted portion of said element in expending energy.

21. In a typewriting machine, in sub-combination, a type bar, a key lever, an operative connection therebetween to transmit initial accelerated movement to the former from the latter and to permit continued final movement of the former independently of the latter, and means associated with said bar independently of said connection to receive and store energy during said initial movement of said bar and to expend such energy in effecting said final movement of said bar at substantially reduced speed.

22. In a typewriting machine, in combination, a platen, a medially pivoted type bar, a key lever, operative connections between said lever and one end of said bar to effect initial movement of the latter toward said platen, and motion governing means including a toggle connected to the opposite end of said bar to limit movement thereof toward said platen.

23. In a typewriting machine, in combination, a platen, a medially pivoted type bar, a key lever, operative connections between said lever and one end of said bar to effect initial movement of the latter toward said platen, and means connected to the opposite end of said bar to effect final and substantially slowed movement thereof toward said platen.

24. In a typewriting machine, in combination, a platen, a medially pivoted type bar, a key lever, operative connections between said lever and one end of said bar to effect initial movement of the latter toward said platen, and means connected to the opposite end of said bar to effect final and substantially slowed movement thereof toward said platen and to limit said movement substantially independently of said platen.

In testimony whereof I affix my signature, in the presence of two witnesses.

GEORGE G. GOING.

Witnesses:
J. W. ANDERSON,
FERDINAND WOLF.

499

Oct. 16, 1923. 1,471,153

G. G. GOING

TYPEWRITING MACHINE

Original Filed March 21, 1921 2 Sheets-Sheet 1

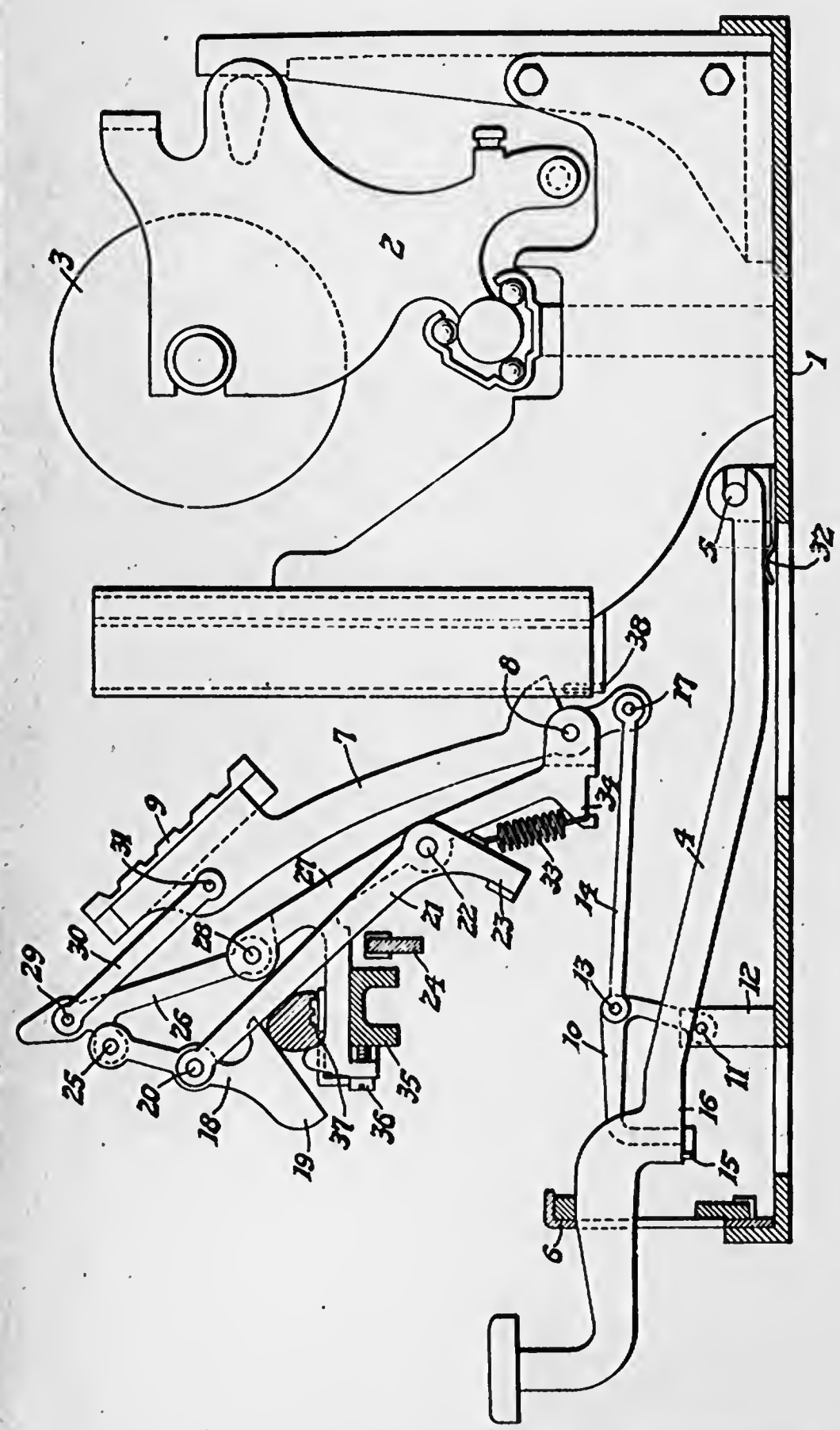

Fig. 1

INVENTOR
G. G. Going,
BY
Duell, Mansfield & Duell
ATTORNEY

500

Oct. 16, 1923. 1,471,153

G. G. GOING

TYPEWRITING MACHINE

Original Filed March 21, 1921 2 Sheets-Sheet 2

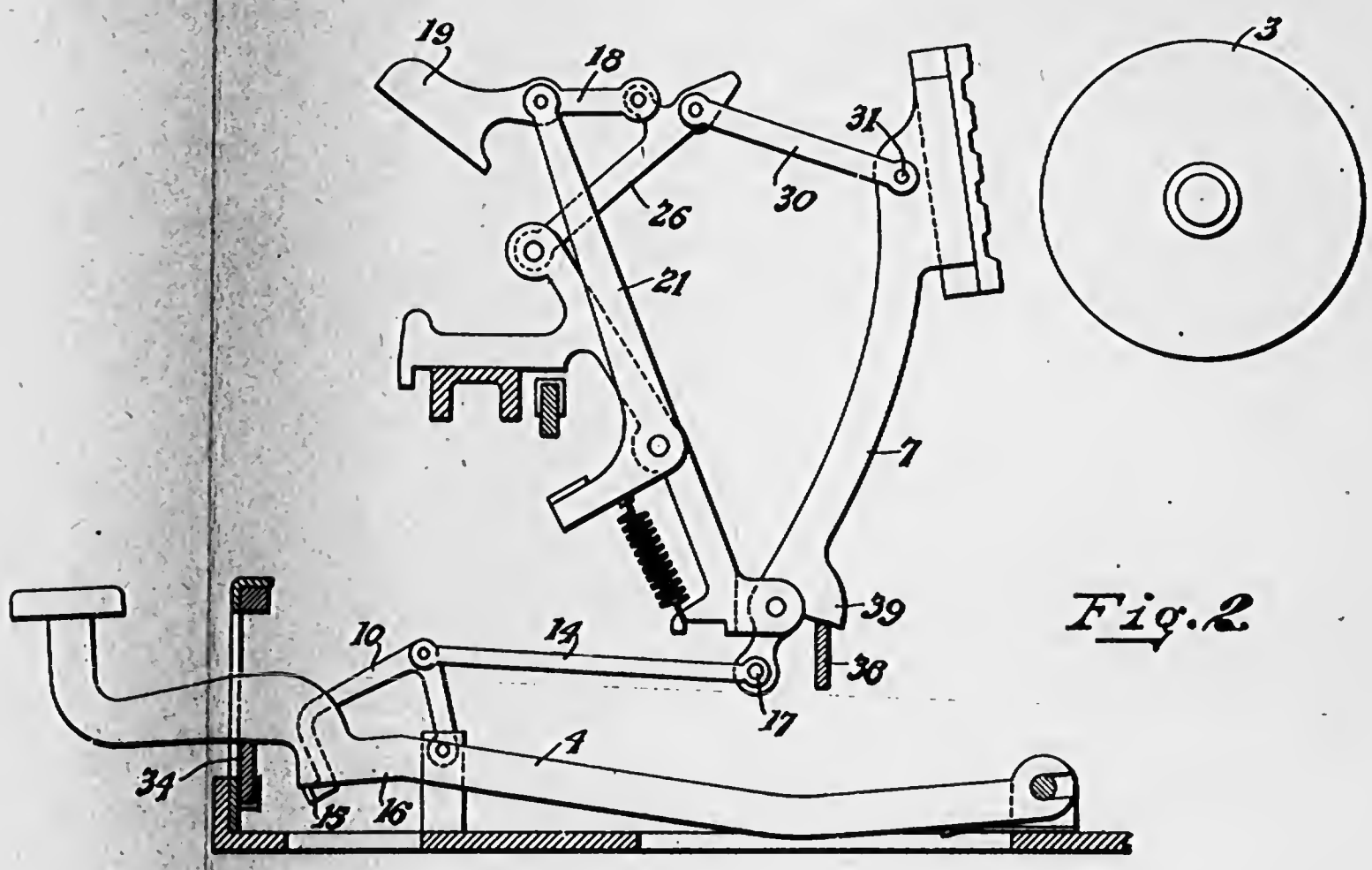

Fig. 2

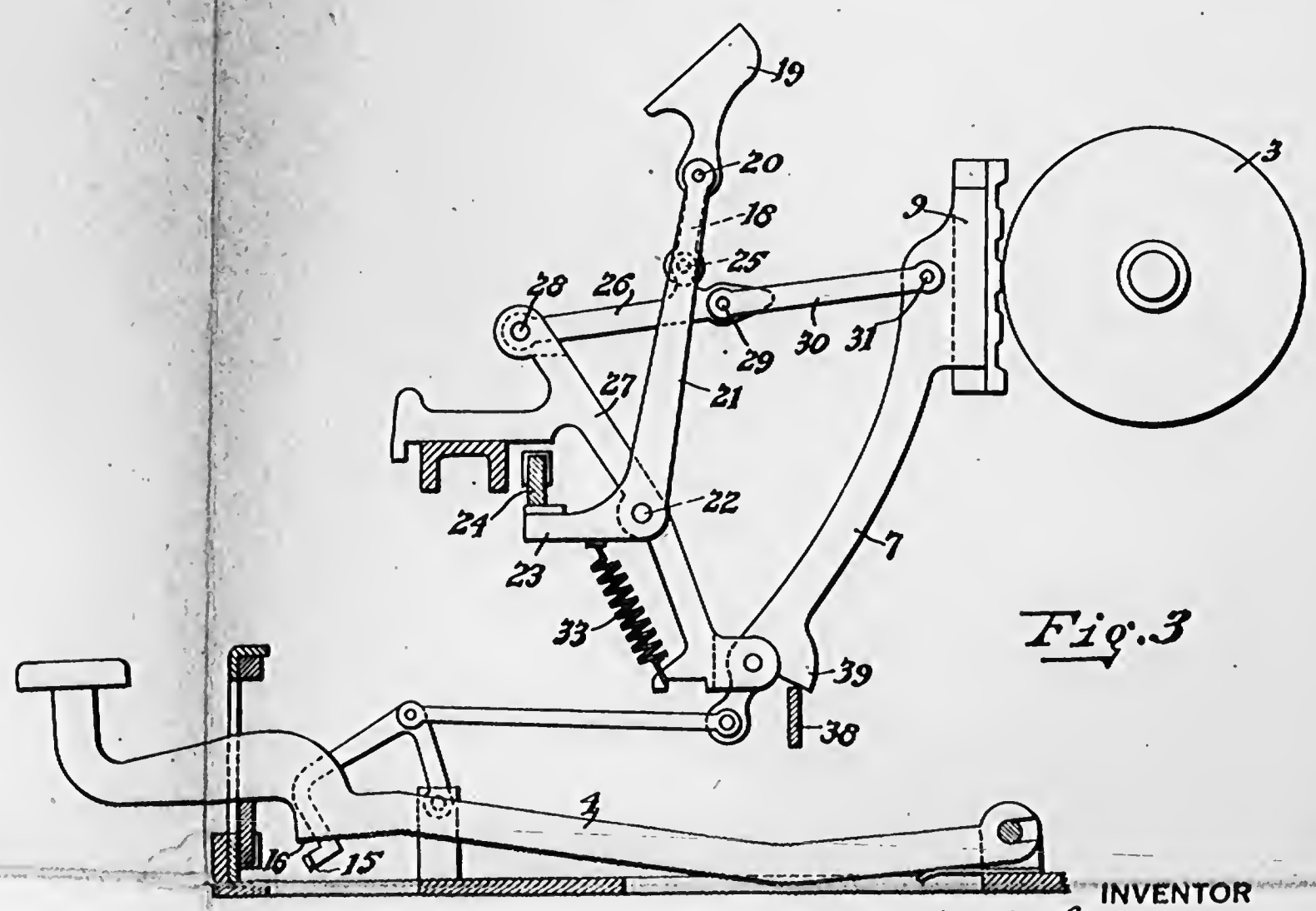

Fig. 3

INVENTOR

G. G. Going.

BY

Dunn, Warfield & Dunn

ATTORNEY

Patented Oct. 16, 1923. 1,471,153

UNITED STATES PATENT OFFICE.

GEORGE GOULD GOING, OF MIDDLETOWN, CONNECTICUT, ASSIGNOR, BY MESNE ASSIGNMENTS, TO THE NOISELESS TYPEWRITER COMPANY, INC., A CORPORATION OF DELAWARE.

TYPEWRITING MACHINE.

Application filed March 21, 1921, Serial No. 453,983. Renewed March 31, 1923.

To all whom it may concern:

Be it known that I, GEORGE GOULD GOING, a citizen of the United States, residing at Middletown, in the county of Middlesex and State of Connecticut, have invented certain new and useful Improvements in Typewriting Machines, of which the following is a full, clear, and exact description, such as will enable others skilled in the art to which it appertains to make and use the same.

This invention relates to typewriting machines and more particularly to an improved type action comprising a swinging type bar and depressible key lever and connecting and associated parts to effect printing.

It is an object of the invention to provide simple, compact and efficient mechanism of the character stated.

It is a further object to provide an improved type action capable of easy and rapid operation and adapted to effect printing substantially without noise.

Another object is to provide an improved type action for small and readily portable machines wherein the parts are capable of relatively cheap manufacture and assembly and which possesses features of structural superiority and functional advantage.

Other objects and advantages will be in part noted hereinafter in connection with the following description of the accompanying drawings, which illustrate a typical but preferred embodiment of the invention and wherein.

Figure 1 represents a side view of the improved type action with the supporting parts in section and certain of the associated parts in full lines;

Figure 2 is a similar view of the type action in the position corresponding to the depressed position of the key lever; and

Fig. 3 is a similar view of the type action in printing position.

In general, the type writing machine includes a base frame 1, having a carriage 2 mounted to travel transversely across the rear part and provided with a platen 3 about which the paper is rolled and which acts as a backing as the type character are impressed thereagainst. The type action includes a depressible key lever 4, pivotally mounted at its rear end 5 and guided vertically at its fore end in a slotted bar 6, and a type bar 7 pivotally mounted intermediate its end but adjacent its lower end at 8 and carrying at its upper or free swinging end the type character head 9. The key lever is connected to the type bar by a link 10 of inverted U-shape, pivotally supported at 11 on an upstanding plate 12 and provided with an off set 15 at its other end disposed below and normally held against the lower edge 16 of the key lever and pivoted at 13 to a horizontal link 14 in turn pivoted at 17 to a lower end of the type bar.

As an associated part of the actuating mechanism for the type bar there is provided an element 18 having an enlarged or weighted end 19 acting, as will be described, to store energy during the initial depression of the key lever and to expand such energy thereafter in continuing and completing the type bar stroke toward the platen. Element 18 is pivotally and medially supported at 20 on the upper end of a bell crank 21, the latter being pivoted at 22 and having its short arm 23 disposed to swing upwardly and forwardly in an arc to engage a cushioned stop 24. Element 18, at its other end, is pivotally connected at 25 with a slightly off-set portion of a link 26 having a fixed pivotal axis of motion on the stationary bracket plate 27 at the upper end 28 and having a pivotal connection at 29 with a link 30, which latter is pivotally connected at 31 to the type bar 7 at the rear of the type head 9. The various movable parts of the type action are normally maintained in retracted position, as shown in Figure 1, through the medium of a plate spring 32 acting to elevate the key lever 4, and a coil spring 33 stretched between a fixed part 34 of the stationary bracket 27 and the short arm 23 of the bell crank 21.

Depression of the key lever 4 (Fig. 2) causes a direct force transmission through links 10 and 14 to the type bar 7, swinging the upper end of the latter rapidly towards the platen. Such movement of the type bar entails a consequent movement of the links 30 and 26 and thereby a movement of the element 18 and the bell crank 21. As the weighted part 19 of the element 18 is thus moved, energy is stored therein, so that, with the key lever 4 arrested by the stop 34 (Fig. 2) the actuating force to effect continued movement of the type bar is transferred from the key lever to the momentum accumulator or energy-storing

means 19. The latter, continuing its swinging movement, acts to extend the links 26 and 30 into aligned parallelism whereby said links constitute, in effect, an extended toggle, and the leverage of the energy-storing means on this toggle is further augmented by an extension into aligned parallelism of the link portion of the element 18 with the long arm of the bell crank 21 to constitute in effect a second toggle, as shown in Figure 3. That is, the printing stroke of the type bar is silently limited by the extension of links 26 and 30, bringing the pivotal points 28, 29 and 31 into line and the extension mentioned, which transmits a powerful pressing force on the type head 9, also brings the pivotal points 22, 20 and 25 into line to prevent overthrow of the links 26 and 30. As shown in Figure 3, also, the bell crank 21 is arrested at this point by engagement of the short arm 23 thereof against the stop 24, the reacting bound there-between coupled with the pull of spring 33 acting to effect immediate and rapid withdrawal of the type bar from printing position to the normal retracted position, as shown in Figure 1. The stroke of the type bar under the force of the weight 19 is permitted by the loose engagement of the off-set 15 on link 10 and the edge 16 of the key lever, these parts moving out of contact, as shown in Figure 3.

In practice, the platen 3 may have a hard surfacing such as steel, not subject to noticeable wear. The type bar connections, furthermore, are capable of easy fore and aft adjustment, since the link 26, the bell crank 21 and the type bar 7 are all pivotally supported on the plate bracket 27, which latter is adjustably held on the angle bar 35 by, for example, an adjusting screw 36 and a locking screw 37. In practice, also, the universal bar 38 is arranged for contact and actuation by the heel 39 of the type bar at its lower end.

In operation, a finger stroke on the key lever 4 effects a very rapid transposition of the parts to the position shown in Figure 2, thereafter movement of the type bar 7 is abruptly decelerated without, however, a distinct stoppage. This results from the initial accelerated movement of the weight 19 and the sudden assumption thereby of the force to transmit the type bar at the point 31 instead of the earlier transmission of force from the key lever to the type bar at the point 17. In addition, the speed of the type bar during the final portion of its stroke is decelerated and the force of its movement is augmented by the contemporaneous approach to extension of the toggle links 26 and 30, and the alignment of the long arm of the bell crank 21 with the connecting portion of the element 18, that is, the alignment of the pivotal points 20, 25 and 22. Speaking in terms of result, therefore, the type action described operates to cause an initial quick transposition of the type bar from retracted position to adjacent the platen under the influence of the key lever, and thereafter a decelerated but more powerful movement to protracted limit under the influence of weight 19 and the dissipation of the energy previously stored therein. Consequently, the final and printing movement of the type bar is at a relatively slow speed without noisy impact against the paper and with power to print by pressure. Furthermore, the protracted limit of the type bar is controlled through the links 26 and 30 substantially independently of the platen 3 and surplus energy of the parts, if any, is noiselessly absorbed through the cushioned engagement of the stop 24 and short arm 23 of the bell crank.

It will be understood that the key levers may be conventionally arranged in series of parallel rows and the fore ends thereof disposed to constitute the ordinary standard keyboard, and that the type bars 7 may be arranged in an arc about the printing point, all of the respective supporting bracket plates 27 being independently adjustable on the segment plate 35. There may also be associated in the machine the well-understood additional mechanism such as the escapement, the shift for printing in different cases, the back spacer, the marginal release, ribbon reverse, etc.

The present action is susceptible of embodiment in relatively small size. The parts are, furthermore, of substantial and rigid construction, not likely to get out of order, capable of easy adjustment and, more especially, operative to effect clearly defined character printing substantially silently. It will be understood, also, that the present invention is susceptible of embodiment in forms other than that specifically shown herein, without sacrifice of the major advantages herein indicated, and resident in the improved mechanism.

Having described my invention, what I claim is new and desire to secure by Letters Patent is;

1. In a typewriting machine in combination, a platen, a key lever, a pivoted type bar, operative connecting means between said key lever and said type bar to effect initial movement of the latter on its stroke toward said platen, a sub-lever pivoted to swing about a fixed axis of motion, an element pivotally connected to said sub-lever, and operative connections between said element and said type bar adjacent the type head of the latter, said connections effecting a storage of energy in said element during the movement of said type bar as propelled by said key lever and an expenditure of said

stored energy thereafter to complete the printing stroke of said type bar.

2. In a typewriting machine in combination, a platen, a depressible key lever, a pivoted type bar, operative connecting means between said lever and said bar to effect the movement of the latter upon initial depression of the former and to permit continued movement of the latter independently of the former, means to acquire and store energy upon said initial movement of said type bar and to expend such energy thereafter to complete the printing stroke of said type bar, and means adjustable towards and from said platen to support said type bar and said energy storing and expending means.

3. In a typewriting machine in combination, a platen, a depressible key lever, a pivoted type bar, operative connecting means between said lever and said bar to start the latter towards said platen on depression of the former, a stop to arrest depression of said lever prior to the final movement of said bar, said connecting means including separable parts to permit continued movement of said bar after arrest of said lever, means independent of said connecting means to store energy during the initial movement of said bar by said lever, said last-mentioned means being associated with said bar to expend its stored energy in effecting a final printing movement of said bar, and a common means adjustable towards and from the platen to support said bar and said energy storing and expending means.

4. In a typewriting machine in combination, a platen, a depressible key lever, a pivoted type bar, an operative connection between said key lever and said type bar to effect initial movement of the latter and to permit continued movement thereof after arrest of the former, a stop to limit depression of said key lever, a pair of pivotally connected links, one connected to a rigid part and the other to said type bar adjacent the type head to limit the printing stroke of said type bar substantially independently of said platen, means connected to one of said links to store energy during movement of said type bar prior to the arrest of said key lever and to expend such energy through said links in completing the printing stroke of said type bar at reduced speed and with increased pressure, and a sub-lever having a pivotal connection at one end to a rigid part and having pivotal connection at the other end to said means for storing and expending energy.

5. In a typewriting machine in combination, a supporting plate, a swinging type bar pivotally mounted thereon at one end, a pair of pivotally connected links, one being pivotally connected to said type bar and the other pivotally connected to said supporting plate at the other end, and means whereby the fore and aft position of said plate may be adjusted.

6. In a typewriting machine in sub-combination, a supporting plate, a swinging type bar pivotally mounted thereon at one end, a link pivotally connected to said type bar at its other end, a second link pivotally connected to said plate at its other end, said links being pivotally connected together, a swinging weighted sub-lever pivotally connected to one of said links, a second sub-lever pivotally connected to said plate and to said weighted sub-lever, and means to permit fore and aft adjustment of said plate.

In testimony whereof I affix my signature, in the presence of two witnesses.

GEORGE GOULD GOING.

Witnesses:
A. W. Austin,
G. E. Nyren.

504

April 22, 1924.

1,491,475

G. G. GOING

TYPEWRITING MACHINE

Filed April 23, 1921

2 Sheets-Sheet 2

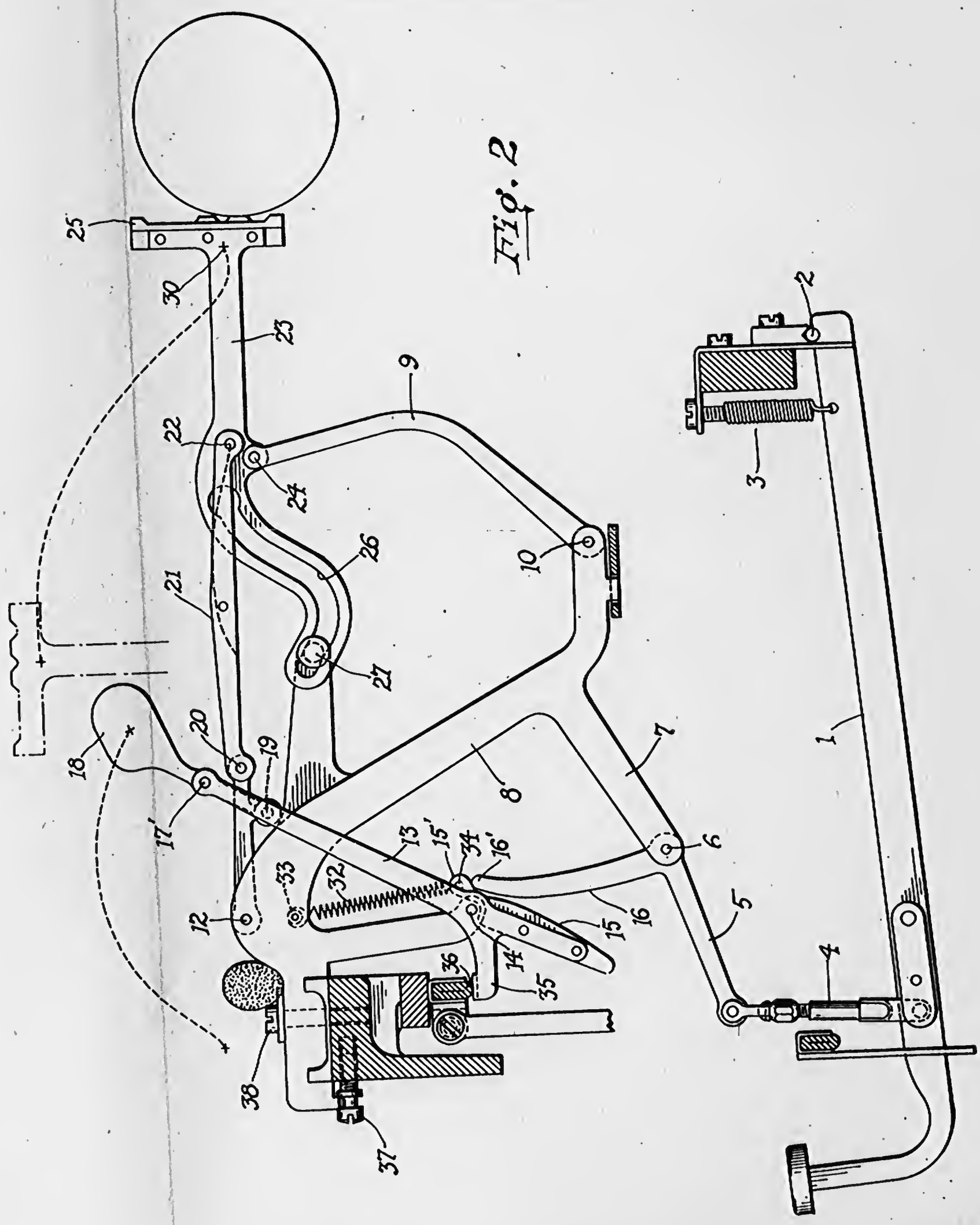

Fig. 2

INVENTOR

G. G. Going.

BY

Dull, Warfield & Dull.

ATTORNEY

505

April 22, 1924. 1,491,475

G. G. GOING

TYPEWRITING MACHINE

Filed April 23, 1921 2 Sheets-Sheet 1

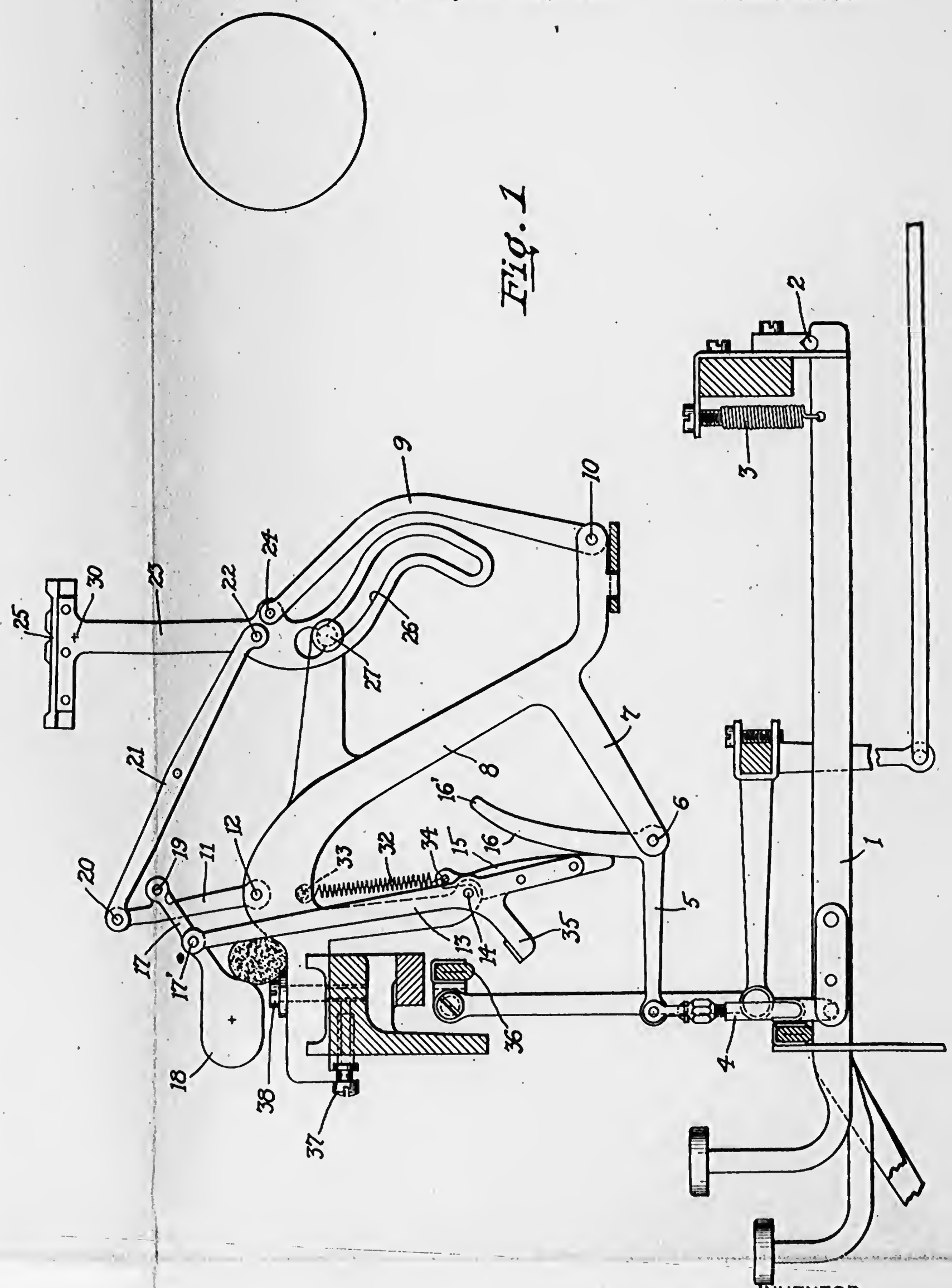

Fig. 1

INVENTOR

G. G. Going

BY

Dwell warfield & Dwell

ATTORNEY

Patented Apr. 22, 1924. 1,491,475

UNITED STATES PATENT OFFICE.

GEORGE GOULD GOING, OF MIDDLETOWN, CONNECTICUT, ASSIGNOR, BY MESNE ASSIGNMENTS, TO THE NOISELESS TYPEWRITER COMPANY INC., A CORPORATION OF DELAWARE.

TYPEWRITING MACHINE.

Application filed April 23, 1921. Serial No. 464,048.

To all whom it may concern:

Be it known that I, GEORGE GOULD GOING, a citizen of the United States, residing at Middletown, in the county of Middlesex and State of Connecticut, have invented certain new and useful Improvements in Typewriting Machines, of which the following is a full, clear, and exact description, such as will enable others skilled in the art to which it appertains to make and use the same.

This invention relates to typewriting machines, and more particularly to improved type actions thereof.

It is an object of the invention to provide an improved type action including a bodily movable type carrier and force-transmitting and direction-and speed-controlling connections thereto, to permit rapid operation and effect printing substantially without noise.

It is a further object to provide a practical and efficient type action wherein the type head has a relatively long movement from retracted to printing limits while the type carrier has a shorter bodily movement, whereby an increased number of the actions can be arranged in an arc in advance of the platen, but without materially extending the fore-and-aft dimension of the machine.

Another object is to provide a simple and improved type action having features of structural superiority and functional advantage.

Other objects and advantages will be in part noted hereinafter in connection with the following description of the accompanying drawings, which illustrate an exemplary embodiment of the invention, and in which

Figure 1 is a side view of the improved type action with certain of the associated parts of the machine, and

Figure 2 is a similar view showing the parts of the type action in printing position, that is, at the end of the printing stroke.

As illustrated, the respective key levers 1 are pivotally mounted at the rear ends on a fulcrum 2, being urged upwardly by a coil spring 3. Each key lever is connected through a link 4, adjustable in length, to the fore end of the horizontal arm of a bell crank lever 5, the latter being pivoted at 6 on a downwardly and forwardly projected arm 7 of a supporting plate or bracket 8. Bracket 8 further pivotally supports a link 9 at the rear point 10, a link 11 at the top point 12, and a sub-lever 13 at front point 14. Lever 13 has attached to the lower end thereof a plate 15 provided with a cam edge against which the cam edge 16 of the vertical arm of the bell crank 5 contacts and works. The lever 13 at its upper end is pivotally connected at 17′ to an element 17, having an enlarged or weighted portion 18 at one (front) end and having its opposite (rear) end connected at 19 to an off-set portion of link 11, the free end of the latter being pivotally connected at 20 to the fore end of a link 21 in turn pivotally connected at 22 to a bodily movable type carrier 23. Link 9, pivoted at its lower end to supporting plate 8, is also pivotally connected at 24 to the type carrier 23. The carrier itself comprises a straight end portion which carries the type head 25 and an angular portion provided with a cam slot 26 receiving the headed pivot stud 27 fast on a rigid arm of the support 8. Movement is imparted to the type carrier 23 through the link 21, while the path of movement of the type head 25 of the carrier 23 is in turn controlled by the link 9 and the pin and slot connection 27, 26.

In operation, as the key lever 1 is depressed from the Figure 1 position, bell crank 5 is rocked to swing lever 13 about its axis of motion 14 and at an accelerated speed due to the rolling contact between the edge 16 of the vertical arm of the bell crank and the edge 15 of the lower end of the lever 13; that is, the point of contact progresses away from the axis 6 and towards the axis 14 as the key lever is depressed, to rapidly accelerate movement of the upper end of the lever 13 which carries the link 17 and the weighted portion 18. Movement of the type carrier 23 is contemporaneously effected through the link 17 to link 11 to link 21. On account, however, of the link 9 and the pin and slot connection 27, 26, the course of movement of a given point 30 of the type head 25 is parabolic, as shown in dotted lines, Figure 2. The face of the type head, moreover, on account of the same conditions, is changed from horizontal in retracted position to vertical in printing position. Towards the end of the stroke of the type carrier, the lower portion of the cam slot 26 co-acts with the pin 27 to insure

substantially a straight line thrust of the carrier towards the platen to effect printing. This final movement, moreover, is effected by the extension into substantial parallelism of the links 11 and 21, so that the pivotal points 12, 20 and 22 are in line, the links mentioned thus acting in the manner of a toggle to decelerate the speed of the type head and augment the effectiveness of the power transmitted thereto, which is further augmented by the contemporaneous alignment of the sub-lever 13 with the link 17 connecting the same to the link 11, that is, the points 17′, 19 and 14 are moved in line as the toggle links 11 aad 21 are also extended. The final movement of the type carrier is thus accomplished through a considerable leverage, insuring forceful pressure printing at the end of the type head stroke.

Such final movement of the type carrier is effected by the weighted end 18 of the link 17, this weight serving during initial depression of the key lever to acquire and store energy, which energy is expended after arrest of the key lever by continuance of the swinging movement of the weight 18 and the resultant continued movement of the type carrier. The key lever is stopped in its down stroke, (Fig. 2) by the upper end 16′ of lever 16 contemporaneously contacting with the heel 15′ of plate 15 where the edge is concaved instead of convexed. In practice the key lever stroke is actually limited when the end of lever 16 reaches the point of reversed curvature, that is from convex to concave, of the edge of plate 15 and the point mentioned is preferably located so that the key is slightly impelled upwardly as the type-head moves its final, say, one-eighth inch toward printing limit. By the same means, if the key is forcibly held all the way down, the type-head is thereby held slightly away from the platen.

The spring 3 serves to re-elevate the key lever and a spring 32 stretched between fixed point 33 on the bracket 8, and a movable point 34 on the lever 13 or otherwise suitably positioned and connected as desired, serves to restore the other movable parts of the action to retracted position. This restoration is further facilitated and expedited by the co-operation of an off-set arm 35 on the sub-lever 13, acting on the printing stroke of the type carrier to engage and actuate a universal bar 36, the re-action between these parts at the protracted limit of the type carrier hastening the initial impulse of the parts to return to normal position.

It will be noted that the stroke of the type carrier 23 is limited by the links 11 and 21 substantially independently of the platen. Furthermore, as the type carrier, link 11, link 9, bell crank 5 and sub-lever 13 are all mounted at relatively fixed positions on the supporting bracket plate 8, fore and aft adjustment of the latter (permitted by adjusting screw 37 and set screw 38) serves to govern the throw of the type carrier with close accuracy for the best printing results. Moreover, it is to be particularly noted that while the path traversed, for example by the point 30 in the type head, is relatively long, the movement of the parts along the first and major portion of the distance is extremely rapid, and that as the propelling force of the type carrier is shifted from the key lever (when end 16′ contacts with heel 15′) to the energy storing means 18, the speed of the type carrier is abruptly decreased but without actual stoppage, without shock and with, moreover, a considerably augmented power on account of the movement into alignment of the levers 13 and 17 on the one hand and the links 11 and 21 on the other. It is to be noted, also, that the retracted position of the type carriers with the relatively long path of point 30 and the relatively short path of point 22, or a major rotary and minor bodily movement of the type carrier 23 enables a segment disposition thereof about an arc having a considerable radius from the printing point, and consequently a sufficient number of the type carriers in this arrangement is permitted to have connection with a corresponding number of key levers whereby a single shift machine is permitted; that is, each type head need carry only two type characters.

It is to be understood, also, that the embodiment of the invention illustrated is susceptible to certain modifications without departure from the scope of the invention and without sacrifice of the attendant and major features of advantage herein noted and resident in the improvement.

Having described my invention, what I claim is new and desire to secure by Letters Patent is:

1. In a typewriting machine, in combination, a key lever, a type carrier supported in a manner adapted to be movable bodily in a continuous curvilinear path, an operative connection therebetween arranged to move the type carrier quickly on the initial and major portion of its printing stroke, said connection including means for moving the type carrier relatively slowly and with augmented force on the final portion of its stroke, and independent means to control the path of movement of said type carrier.

2. In a typewriting machine, in combination, a key-lever, a type-carrier bodily movable in a curvilinear path, an operative connection therebetween to move the latter quickly on the initial and major portion of its printing stroke and relatively slowly and with augmented force on the final por-

tion of such stroke, and independent means including a link pivoted to said type-carrier and having a fixed axis of motion, to control the path of movement of said type-carrier.

3. In a typewriting machine, in combination, a key-lever, a type-carrier bodily movable in a curvilinear path, an operative connection therebetween to move the latter quickly on the initial and major portion of its printing stroke and relatively slowly and with augmented force on the final portion of such stroke, and independent means including a link having a fixed axis of motion at one end and pivotally connected to said carrier at its other end to control the path of movement of said type-carrier.

4. In a typewriting machine, in combination, a key-lever, a type-carrier bodily movable in a curvilinear path, an operative connection therebetween to move the latter quickly on the initial and major portion of its printing stroke and relatively slowly and with augmented force on the final portion of such stroke, and independent means including a link having a fixed axis of motion at one end and pivotally connected to said carrier at its other end, and a cam slot and cooperable stationary pin, to control the path of movement of said type-carrier.

5. In a typewriting machine, in combination, a key-lever, a type-carrier bodily movable in a curvilinear path, an operative connection therebetween to move the latter quickly on the initial and major portion of its printing stroke and relatively slowly and with augmented force on the final portion of such stroke, and independent means including a link having a fixed axis of motion at one end and pivotally connected to said carrier at its other end, and a cam slot on said carrier and cooperable stationary pin to control the path of movement of said type-carrier.

6. In a typewriting machine, in combination, a platen, a depressible key-lever, a type-carrier bodily movable in a continuous curvilinear path and provided with a type head substantially at right-angles to the length of the carrier, supporting means for said carrier having operative connection with the latter to govern the positions thereof and arranged to insure a final linear advance of said carrier against said platen, and independent means including an energy storing member operatively connecting said key-lever and said type-carrier to move the latter, said energy storing member being arranged to spend its energy during the final linear advance of said type carrier.

7. In a typwriting machine, in combination, a platen, a depressible key-lever, a type-carrier bodily movable in a curvilinear path and provided with a type head substantially at right-angles to the length of the carrier, supporting means for said carrier having operative connection with the latter to govern the positions thereof, said means acting to position said carrier substantially vertically when withdrawn from said platen and substantially horizontally when moved against said platen, and independent means operatively connecting said key-lever and said type-carrier to move the latter.

8. In a typewriting machine, in combination, a platen, a depressible key-lever, a type-carrier bodily movable in a curvilinear path and provided with a type head substantially at right-angles to the length of the carrier, supporting means for said carrier having operative connection with the latter to govern the positions thereof, and independent means operatively connecting said key-lever and said type-carrier to move the latter, said last-mentioned means including a member to store energy on depression of said key-lever and to expend such energy in completing the movement of said type-carrier.

9. In a typewriting machine, in combination, a platen, a depressible key-lever, a type-carrier bodily movable at a curvilinear path and provided with a type head substantially at right-angles to the length of the carrier, supporting means for said carrier having operative connection with the latter to govern the positions thereof, and independent means operatively connecting said key-lever and said type-carrier to move the latter, said last-mentioned means including a member to store energy on depression of said key-lever and to expend such energy in completing the movement of said type-carrier, and including a lost-motion device intermediate said member and said key-lever.

10. In a typewriting machine, in combination, a platen, a depressible key-lever, a type-carrier bodily movable in a curvilinear path and provided with a type head substantially at right-angles to the length of the carrier, supporting means for said carrier having operative connection with the latter to govern the positions thereof, said means acting to position said carrier substantially vertically when withdrawn from said platen and substantially horizontally when moved against said platen, and independent means operatively connecting said key-lever and said type-carrier to move the latter, said last-mentioned means including a member to store energy on depression of said key-lever and to expend such energy in completing the movement of said type-carrier.

11. In a typewriting machine, in combination, a platen, a depressible key-lever, a type-carrier bodily movable in a curvilinear path and provided with a type head substantially at right-angles to the length of the carrier, supporting means for said carrier having operative connection with the latter to

govern the positions thereof, said means acting to position said carrier substantially vertically when withdrawn from said platen and substantially horizontally when moved against said platen, and independent means operatively connecting said key-lever and said type-carrier to move the latter, and including a lost-motion device intermediate said member and said key-lever.

12. In a typewriting machine, in combination, a platen, a type-carrier having a rotary and translatory movement, a key lever, and operative connecting means therebetween to effect an accelerated initial rotary movement of said carrier and a decelerated final translatory movement thereof on its stroke toward said platen, said connecting means, including energy storing member, arranged to augment the pressure of the type carrier during its final movement.

13. In a typewriting machine, in combination, a platen, a type-carrier having a rotary and translatory movement, a key lever, and operative connecting means therebetween to effect an initial rotary movement of said typecarrier for carrying the type through a major portion of its path of travel and a final translatory movement for carrying the type through a final minor portion of its path on the stroke toward said platen, said connecting means, including an energy storing member arranged to augment the pressure of said type carrier against the platen during its final movement.

14. In a typewriting machine, in combination, a platen, a type-carrier having a rotary and translatory movement, a key lever, and operative connecting means therebetween to effect an accelerated initial rotary movement of said carrier and a decelerated final translatory movement thereof on its stroke toward said platen, said means including means to store energy during said initial movement and to expend such energy in effecting said final movement of said carrier.

15. In a typewriting machine, in combination, a platen, a type-carrier having a rotary and translatory movement, a key lever, and operative connecting means therebetween to effect an initial rotary movement of said typecarrier for carrying the type through a major portion of its path of travel and a final translatory movement for carrying the type through a minor portion of its path on the stroke toward said platen, said means including means to store energy during said initial movement and to expend such energy in effecting said final movement of said carrier.

16. In a typewriting machine, in combination, a type-carrier slidably mounted and arranged to have both rotary and translatory movement, a key-lever, and operative connecting means therebetween including two sub-levers having rolling contact, one of said sub-levers having a portion of reversed curvature to limit the movement of the other.

17. In a typewriting machine, in combination, a type-carrier slidably mounted and arranged to have both rotary and translatory movement, a key-lever, and operative connecting means therebetween including two sub-levers having rolling contact, the point of such contact progressing from the axis of the impelling sub-lever toward the axis of the impelled sub-lever on the printing stroke to accelerate the latter, one of said sub-levers having a portion of reversed curvature to limit the movement of the other.

18. In a typewriting machine, in combination, a type-carrier slidably mounted and arranged to have both rotary and translatory movement, a key-lever, and operative connecting means therebetween including two sub-levers having rolling contact, the point of such contact progressing from the axis of the impelling sub-lever toward the axis of the impelled sub-lever on the printing stroke to accelerate the latter, said impelled sub-lever having a portion of reversed curvature to limit the movement of the impelling sub-lever and the down-stroke of said key lever.

19. In a typewriting machine, in combination, a type-carrier slidably mounted and arranged to have both rotary and translatory movement, a key-lever, and operative connecting means therebetween including two sub-levers having rolling contact, the point of such contact progressing from the axis of the impelling sub-lever toward the axis of the impelled sub-lever on the printing stroke to accelerate the latter, said impelled sub-lever having a portion of reversed curvature to limit the movement of the impelling sub-lever and the down-stroke of said key lever prior to the final movement of said type-carrier on its printing stroke.

In testimony whereof I affix my signature, in the presence of two witnesses.

GEORGE GOULD GOING.

Witnesses:
A. W. Austin,
N. M. Seiferman.

510

Nov. 10, 1925. 1,561,450

G. G. GOING

TYPEWRITING MACHINE

Filed Sept. 28, 1923 5 Sheets-Sheet 5

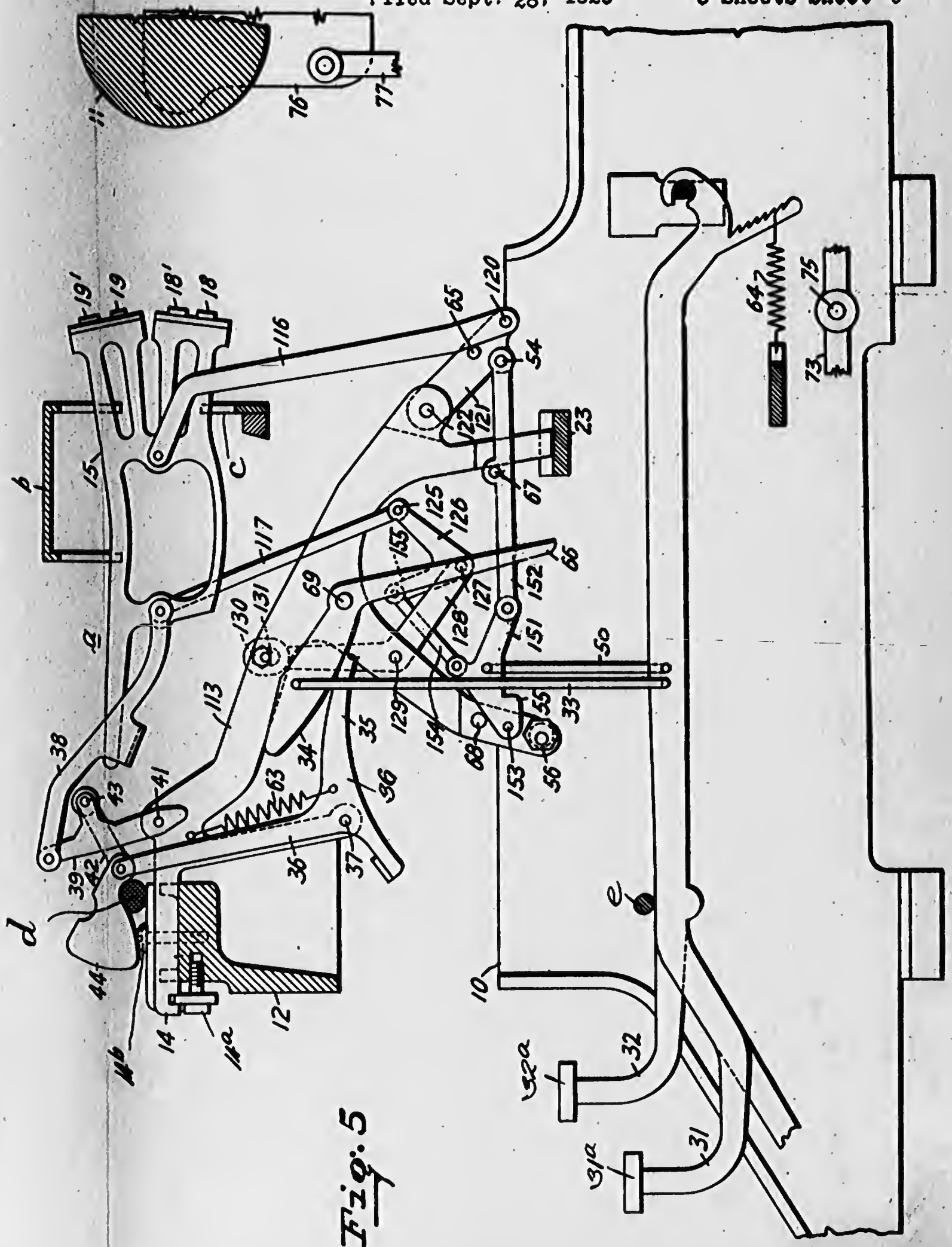

Fig. 5

INVENTOR
George Gould Going
BY
Duell, Warfield & Duell
ATTORNEY

Nov. 10, 1925. 1,561,450

G. G. GOING

TYPEWRITING MACHINE

Filed Sept. 28, 1923 5 Sheets-Sheet 4

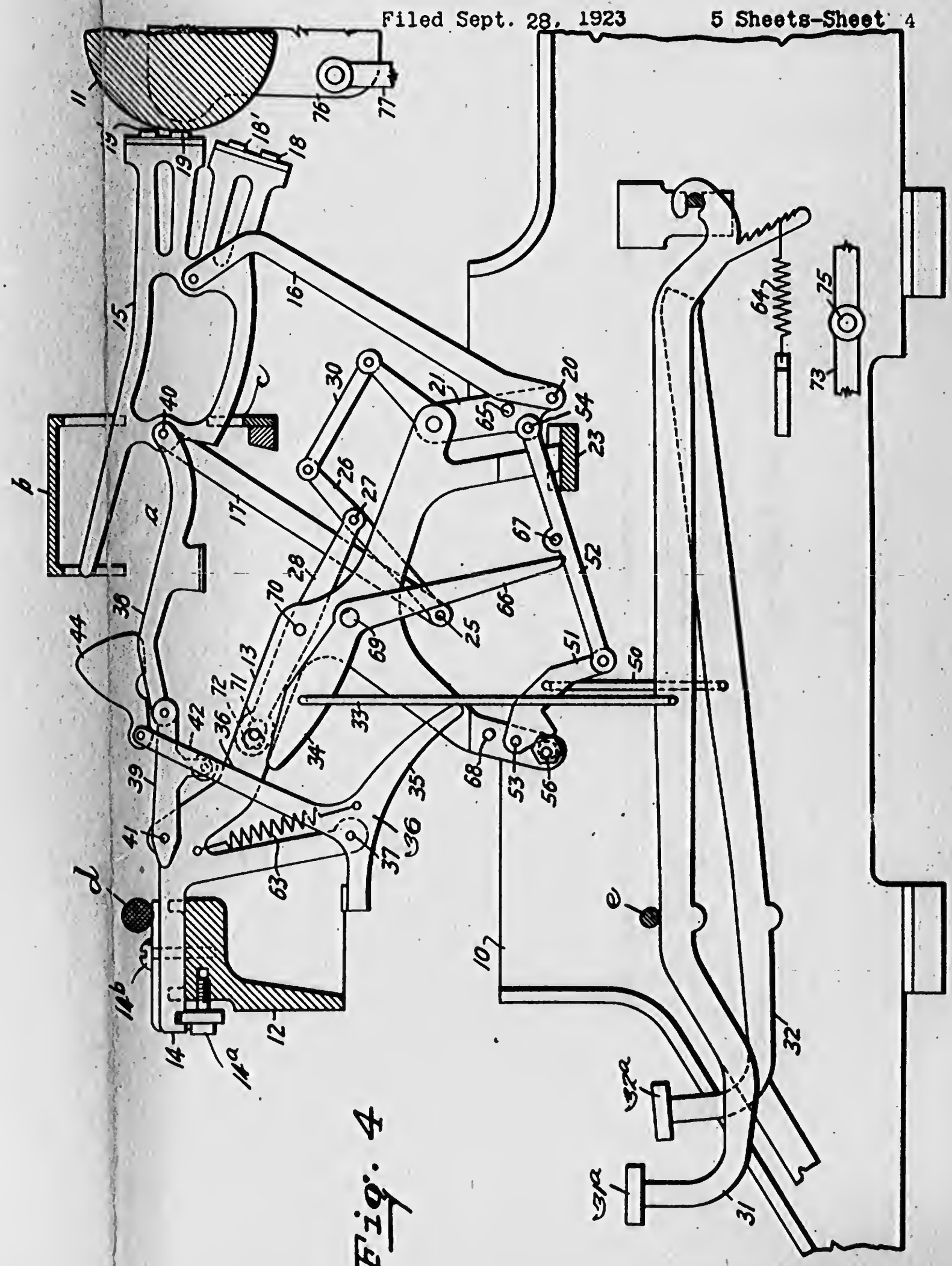

Fig. 4

INVENTOR
George Gould Going,
BY
Duell, Warfield & Duell
ATTORNEY

512

Nov. 10, 1925. 1,561,450

G. G. GOING

TYPEWRITING MACHINE

Filed Sept. 28, 1923 5 Sheets-Sheet 3

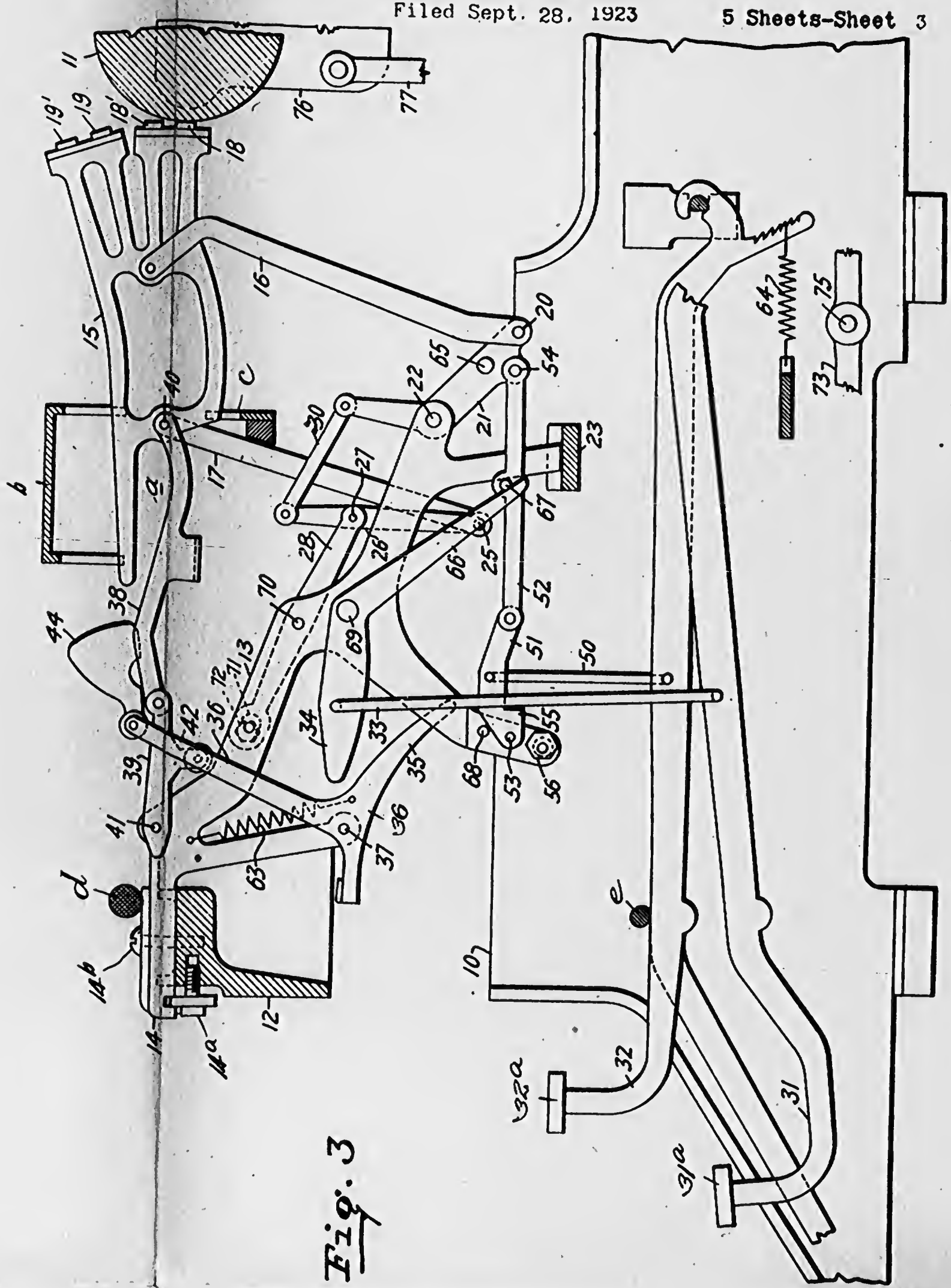

Fig. 3

INVENTOR
George Gould Going,
BY
Duell, Warfield & Duell.
ATTORNEY

Nov. 10, 1925. 1,561,450

G. G. GOING

TYPEWRITING MACHINE

Filed Sept. 28, 1923 5 Sheets-Sheet 2

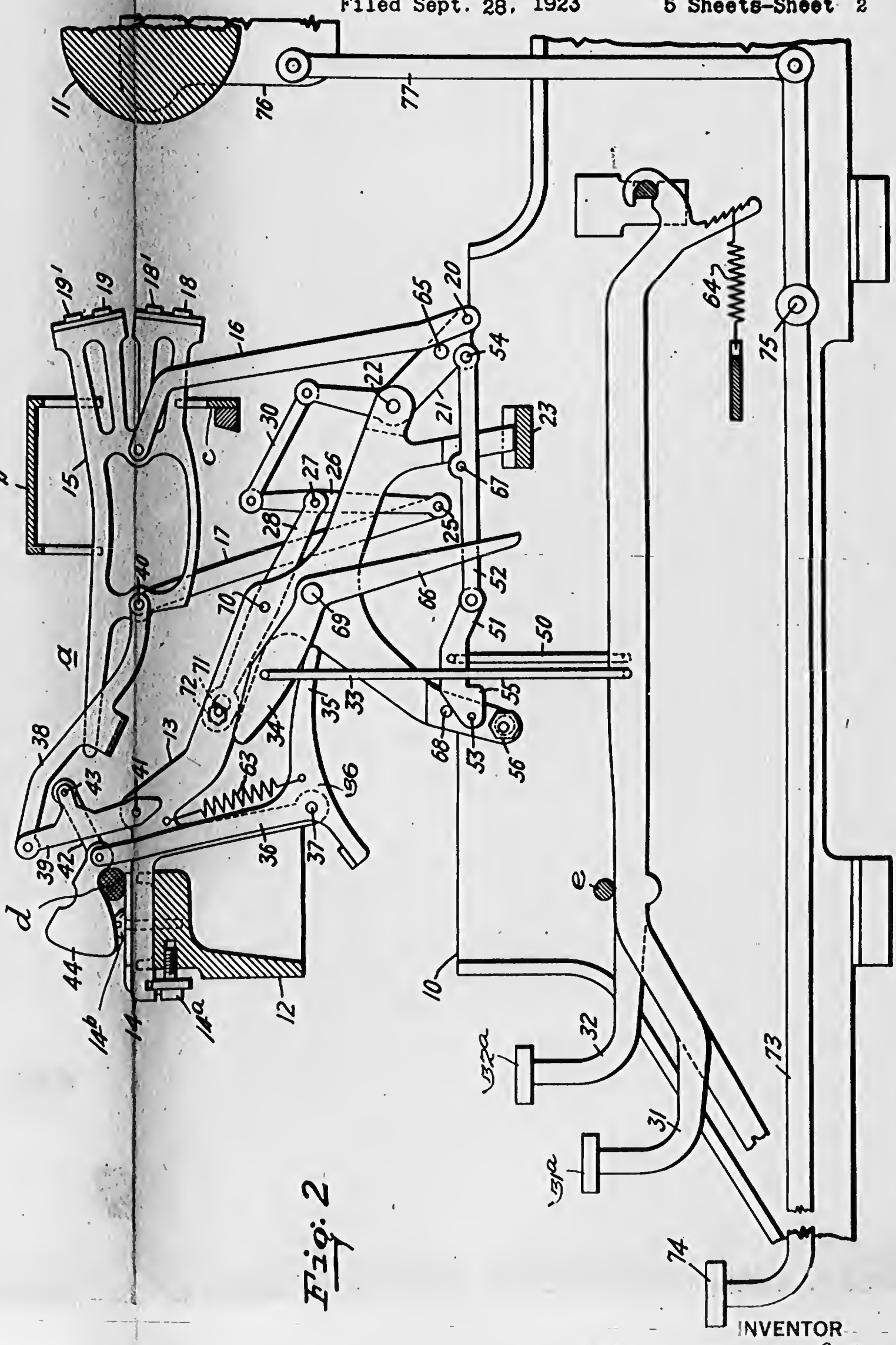

Fig. 2

INVENTOR
George Gould Going
BY
Duell, Warfield & Duell
ATTORNEY

514

Nov. 10, 1925. 1,561,450

G. G. GOING

TYPEWRITING MACHINE

Filed Sept. 28, 1923 5 Sheets-Sheet 1

Fig 1

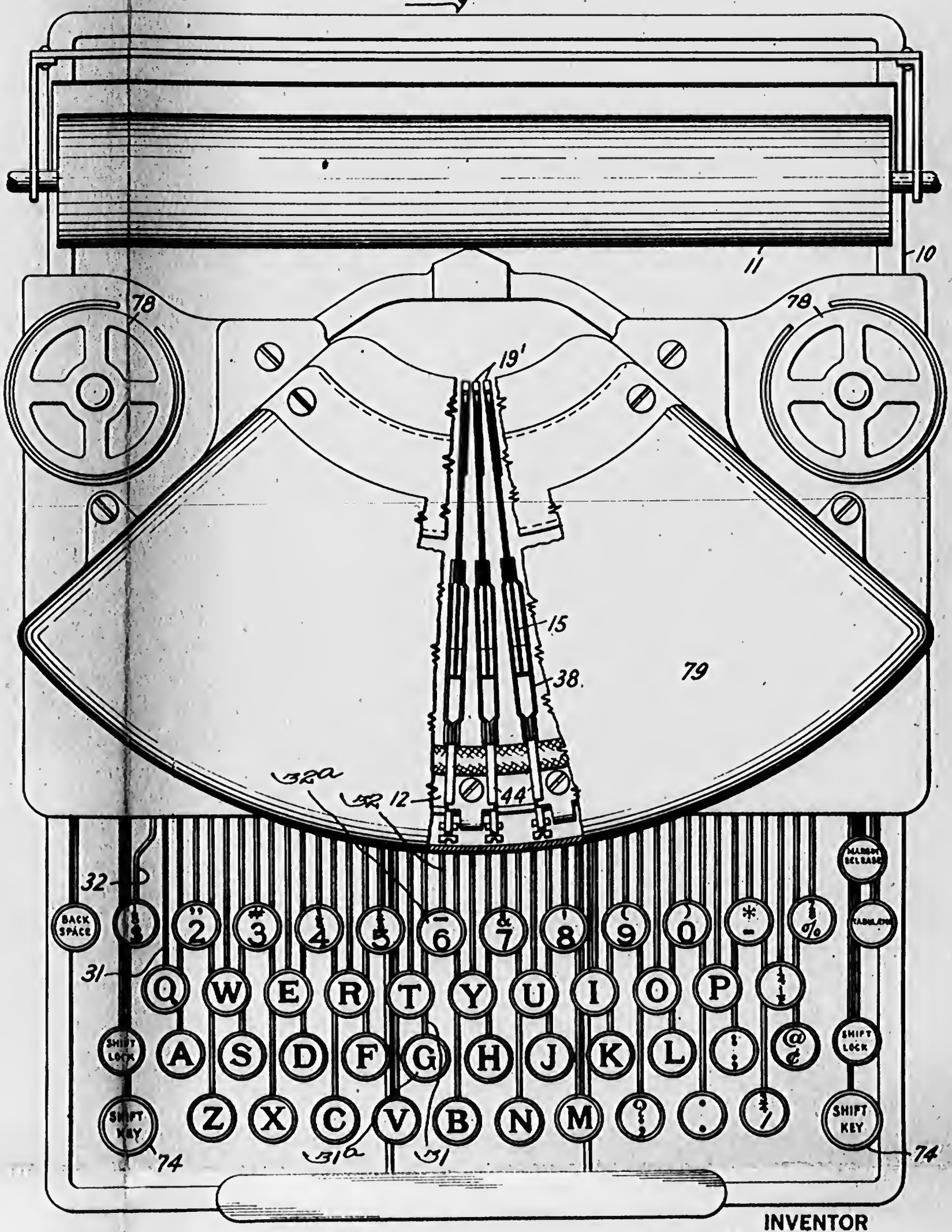

INVENTOR
George Gould Going
BY
Duell, Warfield & Duell.
ATTORNEY

515

Patented Nov. 10, 1925. **1,561,450**

UNITED STATES PATENT OFFICE.

GEORGE GOULD GOING, OF MIDDLETOWN, CONNECTICUT, ASSIGNOR, BY MESNE ASSIGNMENTS, TO REMINGTON-NOISELESS TYPEWRITER CORPORATION, A CORPORATION OF NEW YORK.

TYPEWRITING MACHINE.

Application filed September 28, 1923. Serial No. 665,290.

To all whom it may concern:

Be it known that I, GEORGE GOULD GOING, a citizen of the United States, residing at Middletown, in the county of Middlesex and State of Connecticut, have invented certain new and useful Improvements in Typewriting Machines, of which the following is a full, clear, and exact description, such as will enable others skilled in the art to which it appertains to make and use the same.

This invention relates to typewriting machines and more particularly to type actions therefor.

The main object of the invention, generally stated, is to provide an improved construction and arrangement of parts whereby the elements of each type action are functionally and structurally coordinated to facilitate printing in an improved manner.

More specifically stated, one of the objects of the invention is to provide improved and highly efficient type actions for printing without producing the noise that ordinarily results from the operation of the type actions.

A still further object of the invention is to provide an improved and highly efficient construction of the character specified in which the type actions are controlled from a standard keyboard with a single shift.

To the above and other ends which will hereinafter appear, my invention consists in the features of construction, arrangements of parts and combinations of devices set forth in the following description and particularly pointed out in the appended claims.

For a fuller understanding of the nature and objects of the invention reference should be had to the following detailed description taken in connection with the accompanying drawings, in which:

Figure 1 is a top plan view of a machine embodying this invention, portions being broken away, more clearly to show the relationships of the parts;

Figure 2 is a central, fore-and-aft vertical sectional view with parts omitted of a typewriting machine provided with a type action constructed in accordance with my invention, the type action being shown in the normal position;

Figure 3 is a similar view except that the type-bar is shown in printing position under an actuation of one of its two printing keys, to print from a type on the lower type block or head;

Figure 4 is a similar view showing the type-bar printing from a type on the upper type head under an actuation of the other associated printing key; and

Figure 5 is a view similar to Fig. 2 of a modified form of construction.

In the accompanying drawings I have shown only so much of a typewriting machine as is necessary to arrive at an understanding of my invention in its embodiment therein. I have shown my invention applied to a machine which, as to features outside of my invention, may be similar to that formerly known commercially as the Noiseless typewriter.

I provide in the present instance a machine having a standard keyboard of four banks of keys, each type bar carrying four types and being operated by either one of two keys. Each pair of keys actuates a single front strike type bar in a substantially noiseless manner to normally selectively print from one or another lower case type on the type bar, depending on which of the two keys is actuated, or to selectively print from one or another upper case type on the same type bar after a relative case shift has been effected between the platen and type bars.

In the present embodiment of my invention the frame of the machine may be said to include a base and so-called front plate or member on which various working parts of the machine, including the type actions, are supported. It will be understood that the type bars are arranged in a substantially horizontally disposed arc in front of and around the printing point as a center, so that each type bar moves but a short distance in a radial plane to the common printing center. The controlling means for each type bar, with the possible exception in some instances of the key lever therefor, move in the same plane as the plane of movement of the associated type bar or as close to and parallel with such plane as the assembled parts will permit.

With the foregoing general statement I will hereinafter specifically describe a single type action, it being understood that all actions are alike, or substantially so, except that they are mounted in different planes

that radiate from the printing center. The description of one type action applies to the others.

Referring now to the drawings, 10 denotes the base of the frame of the typewriting machine which supports a paper carriage (not shown) carrying a platen 11. The machine frame may be said to include a front plate or member 12 supporting preferably a row of brackets or type action hangers 13. Each bracket or hanger has an arm 14 received in a radial slot in the member 12 for adjustably securing the hanger to the front plate by screws 14ᵃ and 14ᵇ. The front plate is arcuate in shape so that the brackets, carrying the type actions, one of which is indicated generally at *a*, may be disposed in the ordinary manner about a common printing center. The type action supported by each bracket comprises a type-bar, carrier, or member 15, which is pivotally supported from its bracket 13 by means of a pair of links 16 and 17. The type-bar or member 15 is disposed with its longest dimension arranged substantially horizontally, and is adapted to lie substantially in a vertical radial plane that extends through the printing center. Each type bar is guided in its printing movements in guide slots in fixed upper and lower segmental guide combs *b* and *c* respectively. This member 15, as shown in the present instance, carries four types, the types 18 and 18′ being grouped together and disposed on the lower type head or block, and the types 19 and 19′ being disposed on the other or upper type head. The printing faces of the types on the two type heads are disposed in different intersecting planes, for a reason hereinafter more fully explained.

The links 16 and 17 of each type action, while supported on the machine by the associated bracket 13, are not in the present instance directly pivoted to it; the links 16 being pivoted at 20 to the lower arm of the companion bell-crank lever 21, which is pivoted at 22 to one extremity of the depending arm of its bracket 13. The second link 17 of the type-bar member is pivoted in the present instance at 25 to one end of a lever 26, which in turn is pivoted at 27 to a supporting member 28 on the associated bracket 13. The upper end of the lever 26 is connected to the upper arm of the corresponding bell-crank lever 21 by the link 30. Each type-bar 15 is thus supported by what I term a quaternal or quaternate linkage having axes of motion respectively at 20 and 25, which axes remain in situ during the movement of the type-bar, except when displaced by the movement of the bell-crank lever 21. A supporting sector 23 having radial grooves in its upper side is fixed in the base of the machine and serves as an additional support for the lower ends of brackets 13, each of said lower ends being received in a radial groove in the supporting sector, which enables the companion bracket to receive its radial adjustment.

Each type bar 15 is moved from its retracted position, shown in Fig. 2, by a plurality of keys through suitable actuating and controlling connections. In the drawings, a pair of levers 31 and 32 are shown as provided with keys 31ᵃ and 32ᵃ respectively to actuate the associated type bar 15. The lever 31 is connected through link 33 with a cam lever 34, which has a curved thread where it has rolling contact on one arm 35 of a sublever 36 pivoted at 37 to a depending portion of the companion bracket 13. This sublever 36 is adapted to impart a thrust to the type-bar or member 15 through the connected toggle 38—39. The link 38 of the toggle is pivoted at 40 to the type-bar, while the other link 39 is pivoted at 41 to its bracket 13, power being applied to the toggle from the sublever 36 through a link 42, which is pivoted at 43 to a depending arm on the link 39. The link 42 has a projecting weighted portion 44, which normally rests on a pad *d*, and which in the operation of the type action is adapted to absorb energy and accumulate momentum from the initial movement of the sublever 36.

The key lever 32 has a pull wire or link 50 connected to apply power to a toggle 51—52, such connection being effected at a point intermediate the ends of the link 51. The forward end of this link 51 is pivotally supported at 53 to another depending portion of the bracket 13. The rear end of the link 52 is pivoted at 54 to apply power to move the bell-crank lever 21. To provide a stop for limiting the breaking of the toggle 51—52, and also to insure proper alignment of the types on the upper head with reference to the printing point on the platen, the link 51 is provided with a heel 55 which contacts with the stop 56 having a cam or eccentric adjustment and located on a depending branch of bracket 13. It also will be understood that this stop 56 limits the depression of the key lever 32.

The operation of the type action thus far described is as follows:

When the key 31ᵃ is depressed, a thrust is imparted to the type-bar 15. The key 31ᵃ may be depressed until an arm 66 on lever 34 contacts with a pin 67, (in a manner hereinafter explained), which, when disposed as shown in Fig. 3 operates as a stop to limit the further depression of this key. During the depression of the key 31ᵃ a pull is transmitted through the wire 33 to the cam lever 34, which applies power in the first instance to the tip of the arm 35

of the sublever 36. The acceleration imparted from the cam lever to the sublever is transmitted to the toggles 38—39 through the link 42, causing said toggle to be moved towards the substantially straight line position shown in Fig. 3 and impart a thrust to the member 15, moving it towards the platen. As will be seen the point of rolling contact between the cam lever 34 and the arm 35 of the sublever 36 imparts a gradually changing acceleration to the sublever. Nevertheless, the weight 44 absorbs momentum from the motion of the sublever, and continually stores it through the period of acceleration, i. e., until the movement of the key lever is arrested. The energy in the weight 44, now accumulated, operates to complete the straightening out of the toggle, and effects the final movement of the type or character to print; as for instance, the type 18. During this final movement, the arm 35 of the sublever 36 moves out of contact with the cam lever 34. This final position is clearly shown in Fig. 3.

During the movement of the type-bar 15, when actuated by the key 31ª, the axes of motion 20 and 25 remain in situ. The quaternal linkage supporting the type-bar 15, however, is not shown as, and preferably is not, a parallel linkage. Consequently as it moves, there is motion of rotation of the member of type-bar 15 about an instantaneous center, and a bodily movement or motion of translation thereof, as it moves from the retracted position, shown in Fig. 2, to the printing position shown in Fig. 3. The locus of a point in the type-bar, for instance one point on a type, as the bar moves from retracted position to printing position, in consequence is a curvilinear path.

The toggle 38—39, together with the momentum accumulator 44, operates as a motion governing means to slow up the final movement of the type bar 15 as it approaches the platen, and translates the energy stored in the weight 44 into pressure during the final movement of the type bar, in the manner fully set forth in United States Letters Patent No. 1,261,751, issued in the name of Anderson. A spring is shown at 63 which is distended by the motion of the sublever during the printing movement of the type bar. The spring operates to retract the sublever, thereby retracting the type bar at the termination of the printing stroke.

We will consider more in detail the curvilinear paths traversed by the types in their movements toward the printing position. We will first refer to the lower head carrying the types 18—18′, and to their movement under the action of the key 32ª. Such movement of these types is initially upward substantially normal to the face of the head, but the pathway orients until the movement is substantially directly toward the printing position and this orientation continues throughout that portion of the movement which is under the influence of the key lever. When the type bar has reached this point, i. e., the point where the continued motion of the type bar is entirely under the influence of the energy storing member, the face of one of the lower type 18 or 18′ has oriented itself into a position where it is in front of, and coincides with, the platen surface at the point of printing. The type-bar 15 then makes a rectilinear advance from this point onward against the platen, i. e., parallel to the radius of the cylindrical platen which is drawn at the printing point. This rectilinear portion of the path of advance of the type bar toward the platen is, however, only a very small portion of the total length of the advance; consequently the deceleration of the advance of the type bar 15 toward the platen during its final rectilinear movement is exceedingly quick. This quick deceleration of the type bar, as indicated above, is under the control of the energy storing member, the final execution of the printed character being effected by pressure produced by the final straightening of the toggle 38—39 under the influence of the weight or energy storing member 44.

When, however, a printing key 32ª is depressed, it imparts a pull through the link 50 to the toggle 51—52, until the heel 55 contacts with the adjustable stop 56. As the toggle 51—52 breaks from a substantially straight-line position, it pulls forward on the lower arm of the bell crank lever 21, imparting a pull through the link 30 to the upper end of the lever 26, which, as shown in the drawing, displaces the axis of motion 25 simultaneously with the displacement of the axis of motion at 20. The link 16, in its retracted position, shown in Fig. 2, is normally in contact with a pin or other suitable stop 65 on the bell crank lever 21. Power is thus transmitted from the breaking of the toggle 51—52 to the link 16 which at this time acts as a lever, as though it were a rigid lever arm extending upwardly from the bell-crank lever 21 to pull the type bar 15. The printing position of the type bar when actuated by the key 32ª is clearly shown in Fig. 4. The continual displacement of the two axes of motion 20 and 25 under the action of the toggle 51—52 operates to cause the type bar 15 to swing about a continually varying instantaneous center and the proportions of the linkage of the levers 21 and 26 are such as to effect at this time a displacement of the type bar 15 to a lower horizontal plane. As a consequence, the type bar 15 executes not only the motion of rotation, but of translation into a lower horizontal plane, until a type on the upper head, as the type 19, is brought opposite the printing point when

it is finally impressed against the platen 11. During such movement energy is likewise absorbed by the motion governing means comprising the toggle 38—39 and weight 44, so that the final approach of the type bar 15 to the platen is materially slowed up; the printing being effected under pressure by the expenditure of the energy stored in weight 44. The type bar 15 is retracted, in this instance, not alone under the influence of spring 63, but also under the influence of tension spring 64 which is attached to a heel of each key lever and returns it to the normal position where it is arrested by a suitable stop *e*.

The path of the movement of the upper head carrying the types 19—19′ has in general a curvature which is in opposite direction to that of the path described by the lower head, the types 19 and 19′ moving initially in a downward direction, but the path is gradually oriented in a vertical plane but with an angular displacement opposite to that of the normal to the lower head, as the type bar moves forward toward the platen. This orientation continues until the type bar 15 has reached the point where it no longer moves under the impetus of the key lever 32, i. e., to the point where the energy storing member 44 takes full control of the motion. From this point onward the final movement of the type bar advances rectilinearly toward the platen, this rectilinear portion of the path of advance of the upper head toward the platen coinciding substantially with the rectilinear portion of the path of advance for the lower head. Accordingly there is the same quick deceleration in the advance of the type bar when printing from a type on the upper head as when printing from a type on the lower head, this lower movement being effected by the energy storing member 44 in both instances. The final execution of the printed character from a type on the upper head is thus also produced under influence of pressure due to the final straightening of the toggle 38—39. This curvilinear path and that first described do not differ solely by the direction of their curvature, but may be, and in the form illustrated are, different species of curves. This arises primarily because the lever connections to the two keys are different. As it is desirable to have the touch of the two actuating keys alike, it is desirable to co-correlate the effective momentum and acceleration of the type bar and connecting elements with the ratios of the levers as to present substantially the same resistance at the different keys at corresponding points in the stroke, and to impart the same effective force to the printing elements at the printing point for the same key movement.

In the form illustrated, each type head has two types for printing, each disposed respectively in different horizontal planes relative to the medial vertical plane of the type-bar 15. If these horizontal planes are drawn at the center of the printing point normal to the faces of their respective type heads, then those of the upper head and those of the lower head are respectively parallel but displaced by a distance equal to the distance through which the platen is shifted by the case shift. Likewise the parallel planes of the upper head intersect with the parallel planes of the lower head forming dihedral angles which are equal to the dihedral angle formed by the planes of the faces of the two heads. When the type-bar 15 is actuated selectively by either key 31ᵃ or 32ᵃ and caused to traverse its respective path, the parallel sets of generally horizontal planes are oriented, but in respectively opposite directions by the two key levers. The set of planes which correspond to the characters being printed by one such key, however, are oriented in either case to a position of coincidence with the position the other set would have assumed, were the other key depressed.

As will be seen from Fig. 2, the cam lever 34 is pivoted at 69 to the bracket 13 and has a depending arm 66 which is adapted to make contact with the pin or stop 67 on the link 52 when the key 31ᵃ is in depressed position. A stop 68 is provided on the bracket 13 against which the link 51 makes contact in order to stop the toggle 51—52 when the latter is in the straight line, or substantially in the straight line, position and thereby prevent it from breaking beyond such position in one direction. Should the toggle 51—52 not be entirely straight when the key 31ᵃ is depressed, the axes of motion at 20 and 25 would not be in the correct position for the desired movement of the type bar 15 against the platen. By the provision of arm 66 a final impulse is imparted to the toggle 51—52, whereby it is straightened just prior to the printing of a character from a type on the lower type head of the type bar 15. It is thus seen that the correct position of the axes of motion 20 and 25 is insured at all times when a key 31ᵃ is depressed to impart a thrust to the type bar. When a key 32ᵃ is depressed to impart a pull to the type bar, the rigid relation of the link 16 to the sublever 21 insures at all times during this movement of the type-bar that the correct position of the axes of motion 20 and 25 is maintained and that the path of movement of the type-bar will be properly maintained.

In order to insure properly the correct alignment of the types with respect to the printing point, the position of the member 28 on the bracket 13 is preferably made adjustable. This member is in the form of a lever pivoted at 70 and having at its for-

ward end an elongated opening 71 which engages with the cam 72 journaled in the bracket 13. The rotation of this cam actuates the lever 28 to adjust initially the correct positions of the axes of motion 20 and 25.

For the purpose of determining which one of either pair of types is to effect the printing, a suitable single case shift mechanism is provided. The machine, as shown, is arranged normally to print from either of the types 18 and 19 which will, as a rule, correspond with the lower case characters, and a case shift is actuated to print from the types 18′ and 19′, corresponding to the upper case characters, by the shift key. This is accomplished by effecting a relative displacement between the platen and the types. As illustrated, in the present instance, the platen 11 is shifted by means of a lever 73, carrying at its outer end a shift key 74 and pivoted at 75 to the frame. This lever is connected to a case shift frame 76 by a link 77, whereby the depression of the key 74 will cause the platen to move vertically upward relative to the type.

In addition to the operated parts above described, the machine may be provided with ribbon-carrying spools 78 and a cover plate 79.

In the modification shown in Fig. 5, the type action is of a slightly different construction from that previously described. A bracket or hanger 113 has an arm 14 resting and adjustable on the front plate of the machine in substantially the same manner as shown in Fig. 2. The type bar 15 is as before pivotally supported by quaternal linkage. Such linkage includes links 116 and 117 having shiftable axes of motion, respectively, at 120 and 125, supported respectively by levers 121 and 126. The lever 121 is shown as a plain lever arm pivoted at 122 to the bracket or hanger 113 while the lever 126 is of the bell crank type pivoted at 127 to the support 128. This support is made adjustable as before by pivoting it at 129 to the hanger and is controlled and adjusted by the cam 130 working in the slot 131 at its upper end. When the key lever 31 is depressed it pulls down on the pull wire 33, which actuates the sublever 36 to thrust forward the type bar 15, in substantially the same manner as shown in Fig. 2. When, however, the key lever 32 is depressed, it transmits a pull through the pull wire 50 to a link 151 of a toggle 151—152. Link 151 is pivoted at 153 to a depending arm of the bracket 113. This link is also pivotally connected by means of a link 154 to the upstanding arm 155 of the bell crank lever 126 which carries the axis of motion 125. The depression of the key lever 32 consequently not only breaks the toggle 151—152, but actuates the levers 121 and 126. Since by reason of the stop 65, the link 116 moves rigidly with the lever 121 and a full movement is at once transmitted to the type-bar to project it against the platen in a position to print from a type, as 19, on the upper head. The movement of link 151, however, operates to move the bell-crank lever 126, so that both the axes of motion 120 and 125 are simultaneously displaced. The positive motion thus imparted to the lever 121 operates to guide the front end of the type-bar and at the same time transmits energy to the motion governing means, including the toggle 38—39 and momentum accumulator 44, which operates to decelerate the final movement of the type-bar toward the platen and effect pressure printing.

By the construction embodying my invention it will be seen that each type-bar is actuated by two keys 31ᵃ and 32ᵃ. Each key causes the associated type-bar to move against the platen through a particular individual path, and by so doing selectively prints a character from a type on the upper or lower head, depending on the key which is actuated. Moreover, each type action, except the key lever thereof, for effecting this selective movement of the associated type-bar, is carried as a unit on a single bracket or hanger, and therefore can be removed and replaced and adjusted individually as desired. By properly proportioning the points where power is applied, and the tension on the springs 64, the strokes upon the keys which selectively actuate the type-bars may be equalized throughout the system so that substantially no difference in touch can be observed, while the energy accumulators operate to supply substantially the same pressure while printing from types on the upper or lower type heads.

By the use of this invention, the number of type-bars corresponding to the keys of a so-called standard keyboard may be greatly reduced, or the number of types which may be disposed in a given widthwise space or arc is hereby greatly increased, the increase being a direct multiple of the type carrying heads.

By this invention a very compact and efficient machine may be provided. The arcuate length in which the desired types can be disposed is so reduced that the radial distance from the type arc to the printing center may be reduced to a length comparatively shorter than it was heretofore practical to use, whereby a quick and quiet action may be provided.

The mounting for the type bars in accordance with this invention is well adapted for use in conjunction with means for limiting the printing movement of the type-bars and with motion governing means therefor to ef-

fect deceleration and final pressure printing at the printing point by utilizing the energy initially stored in the motion governing means, and consequently is well adapted for a type action when it is desired to reduce to a minimum the noise of printing.

The use of this invention in a front strike variety of typewriting machine permits the disposition of the usually desired number of types in sufficiently close array about the printing point to have a quick and substantially noiseless type action but yet employ only a single shift.

I am aware that various changes may be made in the construction and that parts thereof may be employed without others without departing from my invention as it is defined in the accompanying claims.

Having described my invention, what I claim as new and desire to secure by Letters Patent, is:

1. In a typewriting machine, the combination of a platen, a front stroke end-thrust type-bar carrying a plurality of transversely arranged types fixed on an end thereof, a plurality of independently operable printing keys, and means controlled thereby for effecting an individually selective actuation of said type-bar to print from one or another type thereon depending on which of said keys is independently actuated and for effecting a printing movement of the type bar in a general endwise direction and causing different types to travel through different oppositely disposed curved paths in the same plane to a position where the effective types reach a line of substantial coincidence in front of the printing point before the platen is reached, said line of coincidence obtaining for a substantial portion of the final part of each path of advance of the active type towards the platen, the construction and arrangement of said controlling means being such that both of said printing keys is actuated by substantially a uniform touch.

2. In a typewriting machine, the combination of a platen, a front-stroke end-thrust type-bar carrying a plurality of transversely arranged types fixed on an end thereof, a plurality of independently operable printing keys, and means controlled thereby for effecting an individually selective actuation of said type bar to print from one or another type thereon depending on which of said keys is independently actuated and for effecting a printing movement of the type bar in a general endwise direction and causing different types to travel through different oppositely disposed curved paths in the same plane to a position where the effective types reach a line of substantial coincidence in front of the printing point before the platen is reached, said line of coincidence obtaining for a substantial portion of the final part of each path of advance of the active type towards the platen, said controlling means including a pair of guide links pivoted to the type-bar at different points in the length thereof and on which the type bar is mounted and by which it is guided in its printing movement.

3. In a typewriting machine, the combination of a type-bar, two keys for actuating said type-bar, and intermediate controlling means between said keys and type bar for moving the latter selectively to the printing point, the construction and arrangement of the parts of said intermediate controlling means being such that a pull is exerted on the bar by an actuation of one key and a thrust is exerted on the bar by an actuation of the other key.

4. In a typewriting machine, a plurality of type actions each comprising a type bar, a pair of links on which said type bar is mounted, two keys for actuating said type bar selectively, means controlled by one of said keys for causing said links to turn around fixed pivotal centers in moving the type-bar, and means controlled by the other of said keys for causing the pivotal centers of the companion pair of links to shift independently of the centers of the links of the other type actions in moving the associated type to printing position.

5. A type action comprising a type bar, a pair of links on which said type bar is mounted, two keys for actuating said type bar selectively, means controlled by one of said keys for causing said links to turn around fixed pivotal centers in moving the type-bar, and means controlled by the other of said keys for causing the pivotal centers of said links to shift different distances during the movement of the links and thereby cause a different type on the bar to print.

6. In a typewriting machine, the combination of a type bar carrying a plurality of types and pivotally mounted on a quaternate linkage having at least one of its axes of motion adapted to be displaced, a plurality of keys having actuating connections to actuate selectively said type-bar to print from one or another of the types thereon depending on the key actuated, and automatically operating means actuated at each printing operation to decelerate the final printing movement of the type bar and noiselessly effect an imprint from a type thereon.

7. A type action for typewriting and like machines comprising a type bar, links supporting said type-bar, two keys for actuating said type-bar selectively to print from one or another type thereon, a lever which constitutes a support for one of said links, means controlled by one of said keys for actuating the type-bar and at which time said lever remains fixed, and means controlled by the other of said keys for shifting said lever and causing it to actuate the type-bar

at the same time changing the pivotal center of the link which is supported thereby.

8. In a typewriting machine, the combination with a type member carrying a plurality of type characters, of a pair of keys for said member, having actuating connections for selectively actuating the same; the connections from one key being arranged to impart a thrust thereto, the actuating connections from the other to impart a pull to said type member.

9. In a typewriting machine, the combination with a type member mounted on a quaternal linkage having two axes of motion supported by the machine, said member carrying a plurality of type characters, of a pair of keys for said member having actuating connections for selectively actuating the same; the connections from one key being arranged to impart a thrust thereto, the connections from the other to impart a pull and simultaneously displace an axis of motion.

10. In a typewriting machine, the combination with a type member carrying a plurality of type characters, of a motion governing means articulated thereto, arranged to decelerate the final printing movement of said member, and a plurality of keys having actuating connections to actuate said member selectively through different paths.

11. In a typewriting machine, the combination with a type member, mounted to execute both motion of translation and rotation, and carrying a plurality of type characters, of a motion governing means articulated thereto, arranged to decelerate the final printing movement of said member, and a plurality of keys having actuating connections to actuate said member selectively through different paths.

12. In a typewriting machine, the combination with a type member, mounted to execute both motion of translation and of rotation about a varying instantaneous centre, and carrying a plurality of type characters, of a motion governing means articulated thereto, arranged to decelerate the final printing movement of said member, and a plurality of keys having actuating connections to actuate selectively said member.

13. In a typewriting machine, the combination with a type-bar pivotally mounted on a quaternal linkage and carrying a plurality of type characters, of a motion governing means articulated thereto, arranged to decelerate the final printing movement of said bar, and a pair of keys having actuating connections to actuate selectively said bar.

14. In a typewriting machine, the combination with a type-bar pivotally mounted on a quaternal linkage, and having two axes of motion supported by the machine, each bar carrying a plurality of type characters, of a motion governing means articulated thereto, arranged to decelerate the final printing movement of said bar, and a pair of keys having actuating connections to actuate selectively said member.

15. In a typewriting machine, the combination of a type-bar, a pair of links supporting said bar and pivoted thereto at different points in the length of the bar, two keys, a train of actuating connections from one of said keys to the type-bar to move it through one path to the printing point, and a separate train of connections from the other of said keys to one of said links to move the type-bar through another path to the printing point.

16. In a typewriting machine, the combination of a type action comprising a type-bar, type heads fixedly secured thereto with the printing faces of the types arranged in intersecting planes, two printing keys for selectively printing from a type on one or the other of said type heads according to which of said keys is actuated, and means for causing the type-bar to move in a curved path in one direction under control of one key and to cause the type-bar to move in a curved path in the opposite direction under control of the other key.

17. In a typewriting machine, the combination of a type-bar, a pair of links supporting said bar and pivoted thereto at different points in the length of the bar, two keys, a train of actuating connections from one of said keys to the type-bar to move it through one path to the printing point, and a separate train of connections from the other of said keys to one of said links to move the type-bar through another path to the printing point, one of said trains of connections including means for shifting the centers of motion of said links.

18. A type action for typewriting and like machines comprising a type-bar, links supporting said type-bar, two keys for actuating said type-bar selectively to print from one or another type thereon, two levers each of which constitutes a support for one of said links which is pivoted thereto, means controlled by one of said keys for causing said links to turn on said levers while the latter remain fixed, and means controlled by the other of said keys for shifting said levers to actuate the type-bar and shift the pivotal centers of said links.

19. In a typewriting machine, the combination with a type-bar carrying a plurality of types, of a plurality of printing keys, and means controlled by said keys for moving said type bar through different paths to print from each of said types with a decelerated movement.

20. In a typewriting machine, the combination with a type-bar carrying a plurality of types, of a plurality of printing keys,

and means controlled thereby for selectively moving the type-bar to print from each of said types with movements which are decelerated substantially to zero at the printing point.

21. In a typewriting machine, the combination with a type-bar carrying a plurality of types, of a plurality of keys for said type-bar having operating connections for selectively moving said type-bar to print from each of said types, said connections including momentum accumulating means operative to absorb the momentum of the type-bar as it approaches the printing point and convert the same into pressure at the printing point.

22. In a typewriting machine, the combination with a type-bar pivotally mounted on a quaternal linkage, having two axes of motion supported by the machine and adapted to be displaced, each bar carrying a plurality of type characters, of a motion governing means articulated thereto, arranged to decelerate the final printing movement of said bar, and a pair of keys having actuating connections to actuate selectively said bar.

23. In a typewriting machine, the combination with a type-bar pivotally mounted on a quaternal linkage and carrying a plurality of type characters, of a motion governing means articulated thereto, arranged to decelerate the final printing movement of said bar, and a pair of keys having actuating connections to actuate selectively said bar; one of said keys being arranged to displace an axis of motion.

24. In a typewriting machine, the combination with a type-bar pivotally mounted on a quaternal linkage having two axes of motion supported by the machine and adapted to be displaced, each bar carrying a plurality of type characters, of a motion governing means articulated to said bar, and arranged to decelerate its final printing movement, and a pair of keys having actuating connections to actuate selectively said bar; the connections from one key being arranged to displace both axes of motion.

25. In a typewriting machine, the combination with a type member pivotally mounted on a quaternal linkage, having two axes of motion supported by the machine and adapted to be displaced, each bar carrying a plurality of type characters, of a pair of keys having actuating connections for selectively actuating said bar; the connections from one key being arranged to impart a thrust movement to said bar, the connections from the other to impart a pull.

26. In a typewriting machine, the combination with a type-bar pivotally mounted on a quaternal linkage, having two axes of motion supported by the machine and adapted to be displaced, each bar carrying a plurality of type characters, of a motion governing means articulated to said member and arranged to decelerate its final printing movement, and a pair of keys having actuating connections for selectively imparting different printing movements to said type-bar; the action from one key being arranged to impart a thrust to said bar, the connections from the other to impart a pull and simultaneously displace at least one axis of motion.

27. In a typewriting machine, the combination with a platen, of a type member carrying a plurality of type characters, a motion governing means articulated to said member having a momentum accumulator arranged to decelerate the final printing movement of said member and to translate into pressure against the platen the kinetic energy of the accumulator, and a plurality of keys having actuating connections to actuate selectively said member.

28. In a typewriting machine, the combination with a platen, of a type member mounted to execute both motion of translation and of rotation and carrying a plurality of type characters, a motion governing means articulated to said member having a momentum accumulator arranged to decelerate the final printing movement of said member and to translate into pressure against the platen the kinetic energy of the accumulator, and a plurality of keys having actuating connections to actuate selectively said member.

29. In a typewriting machine, the combination with a platen, of a type-bar mounted to execute motion of translation and rotation about a varying instantaneous centre and carrying a plurality of types, a motion governing means articulated to said type-bar and having a momentum accumulator arranged to decelerate the final printing movement of said type-bar and to translate into pressure against the platen the kinetic energy of the accumulator, and a pair of keys having actuating connections to actuate selectively said type-bar.

30. In a typewriting machine, the combination with a platen, of a flat type-bar having a plurality of type carrying blocks or heads, said bar being mounted on a quaternal linkage pivoted to said machine, a motion governing means articulated to said type-bar and including a momentum accumulator arranged to decelerate the final printing movement of said bar and to translate into pressure against the platen the kinetic energy of the accumulator, and a pair of keys having actuating connections to actuate selectively said bar.

31. In a typewriting machine, the combination with a platen, of a flat type bar having a plurality of type carrying blocks or heads, a motion governing means articulated to said type-bar and including a momentum accumulator arranged to decelerate the final

printing movement of said bar and to translate into pressure against the platen the kinetic energy of the accumulator, and a pair of keys operatively connected to said type-bar arranged selectively to bring a type on one or another of the type carrying heads in contact with the platen.

32. In a typewriting machine, the combination with a platen, of a flat type-bar having a plurality of type carrying blocks or heads, said type-bar being pivotally mounted on a quaternal linkage having two axes of motion supported by the machine, a motion governing means articulated to said type-bar and having a momentum accumulator arranged to decelerate the final printing movement of said bar and to translate into pressure against the platen the kinetic energy of the accumulator, and a pair of keys operatively connected to said type bar arranged to bring selectively a type on one or another of said type carrying heads into contact with the platen.

33. In a typewriting machine, the combination with a platen, of a flat type bar having a plurality of type carrying blocks or heads, said bar being pivotally mounted on a quaternal linkage and arranged to have two axes of motion supported by the machine and adapted to be displaced, a motion governing means articulated to said type-bar and provided with a momentum accumulator arranged to decelerate the final printing movement of said type bar and to translate into pressure against the platen the kinetic energy of the accumulator, and a pair of keys operatively connected to said type bar arranged selectively to bring a type on one or another of said type carrying heads into contact with the platen.

34. In a typewriting machine, the combination with a platen, of a flat type bar having a plurality of type carrying blocks or heads, said type bar being pivotally mounted on a quaternal linkage having two axes of motion supported by the machine and adapted to be displaced, a motion governing means articulated to said type bar and provided with a momentum accumulator arranged to decelerate the final printing movement of said type bar and to translate into pressure against the platen the kinetic energy of the accumulator, and a pair of keys operatively connected to said type bar; said keys being arranged selectively to bring a type on one or another of said type carrying heads into contact with the platen through different paths, the operative connections from one key including means to displace said axes of motion.

35. In a typewriting machine, the combination with a platen, of a flat type-bar having a plurality of type carrying blocks or heads; said type-bar being mounted on a quaternate linkage having two axes of motion pivotally supported by the machine and adapted to be displaced, motion governing means articulated to said type bar and provided with a momentum accumulator arranged to decelerate the final printing movement of the type bar and to translate into pressure against the platen the kinetic energy of the accumulator, and a pair of keys operatively connected to said type-bar, said keys having connections to bring selectively a type on one or the other of said type carrying heads against the platen, one connection being arranged to impart a thrust to said type-bar, the connection from the other key being arranged to impart a pull.

36. In a typewriting machine, the combination with a platen, of a flat type bar having a plurality of type carrying heads, said type bar being mounted on a quaternate linkage having two axes of motion pivotally supported by the machine and adapted to be displaced, motion governing means articulated to said type bar and provided with a momentum accumulator arranged to decelerate the final printing movement thereof and to translate into pressure against the platen the kinetic energy of the accumulator, a pair of printing keys, and operative connections between said keys and type-bar to bring selectively a type on one or the other of said type carrying heads against the platen, one connection being arranged to impart a thrust to said type bar, the connection from the other key being arranged to impart a pull and simultaneously displace both axes of motion.

37. In a typewriting or like machine, the combination of a type-bar having a plurality of types thereon, two actuating keys for the type-bar, controlling means for controlling the path of movement of said type-bar to print from one or another type thereon in accordance with the key which is actuated, said controlling means including toggle members, and means effective at all times for preventing said toggle members from breaking in one direction beyond substantially the straight line position.

38. In a typewriting machine, the combination of a frame, a paper carriage, a platen, a plurality of brackets secured to said frame and each independently detachable therefrom together with the parts carried thereby, each bracket having a front stroke type-bar and a pair of links pivotally supporting said bar thereon for a general endwise printing movement, and a plurality of actuating keys operatively connected to each type bar and adapted to actuate selectively the associated type-bar through different paths to print from different types on the bar.

39. In a typewriting machine, the combination of a frame, a paper carriage, a platen, a plurality of brackets secured to said frame and each independently detachable there-

from together with the parts carried thereby, each bracket having a type bar and a pair of links pivotally supporting the bar thereon, motion governing means which decelerates the final printing movement of the type-bar pivotally connected between a fixed portion of each bracket and the associated type bar, and a plurality of actuating keys operatively connected to each type bar and adapted to actuate the same selectively through different paths to print from different types on the bar.

40. In a typewriting machine, the combination of a frame, a paper carriage, a platen, a plurality of brackets adjustably secured to said frame, each bracket having a flat type bar carrying a plurality of types disposed in different horizontal planes and a pair of links pivotally supporting the type-bar to the bracket, and a pair of actuating keys operatively connected to each type-bar and arranged to actuate it selectively through different paths to print from different types thereon.

41. In a typewriting machine, the combination of a frame; a paper carriage; a platen; a plurality of brackets in radial planes about a common printing point, means for individually adjusting each bracket in its radial plane, each bracket having a type-bar, a pair of links pivotally supporting the type-bar thereon for endwise printing movement, and motion governing means for decelerating the final portion of the printing movement of the type-bar articulated between said type-bar and its bracket; and a pair of actuating keys operatively connected to each type-bar and adapted to actuate the same selectively through different paths and to print from different types thereon.

42. In a typewriting machine, the combination of a frame having a front plate, a paper carriage, a platen, a plurality of brackets adjustably secured to said front plate, each bracket carrying a type bar, a pair of links pivotally supporting each bar on its bracket, motion governing means including a momentum accumulator articulated between each type bar and its bracket, and a pair of actuating keys operatively connected to each type bar and arranged to actuate the same selectively through different paths to print from different types thereon.

43. In a typewriter machine, the combination of a frame having an arcuate front plate, a paper carriage, a platen, a plurality of brackets adjustably secured to said front plate about a common printing center, each bracket carrying a type-bar and a pair of links pivotally supporting the bar to the bracket, each pair of said links being articulated to its bracket through movable axes of motion, and a pair of printing keys for each type bar having actuating connections thereto, one of said keys imparting a thrust movement and the other a pull movement to the bar and actuating said bar selectively through different paths to print from different types thereon.

44. In a typewriting machine, the combination of a frame having an arcuate front plate, a paper carriage, a platen, a plurality of brackets adjustably secured to said front plate and each carrying a type-bar having a quaternate linkage articulating the same thereon, each of said bars having a pair of type carrying heads disposed in common vertical plane, each head having faces lying in planes which intersect and carrying a plurality of types disposed in different horizontal parallel planes, a pair of actuating key levers for each type-bar having connections thereto to impart respectively a thrust and a pull and to actuate the associated type-bar selectively through different paths to print from different types thereon.

45. In a typewriting machine, the combination of a frame having an arcuate front plate, a paper carriage, a platen, a plurality of brackets adjustably secured to said front plate and each carrying a type-bar and a quaternate linkage pivotally supporting the same on the bracket, a motion governing means articulated between the associated type-bar and bracket, a pair of actuating key levers for each type-bar, and operating connections from each pair of key levers to the associated type bar arranged to impart respectively a thrust and a pull and to actuate the associated bar selectively through different paths to print from different types thereon.

46. In a typewriting machine, the combination of a frame having an arcuate front plate, a paper carriage, a platen, a plurality of brackets adjustably secured to said front plate and each carrying a type-bar having a quaternate linkage pivotally supporting the associated type-bar to the bracket, each of said type-bars lying in a vertical plane passing through the common printing center and having a plurality of type carrying heads having faces lying in planes which intersect, said intersecting planes being adapted to be tangential to the surface of the platen when in printing position, motion governing means for each type action including a momentum accumulator articulated between the associated type-bar and the bracket, and a pair of key levers operatively connected to each type-bar and adapted to impart respectively a thrust and a pull and to actuate selectively the associated type-bar through different paths to print from different types thereon.

47. In a typewriting machine, a plurality of type actions, each comprising a type member, a pair of supporting links for said type member, a lever for displacing the pivotal

support of a link, a pair of key levers for actuating the associated type member, an operating connection from one of the said pair of key levers including a cam lever arranged to actuate the associated type member, a second operating connection to this same type member from the other of said pair of associated key levers including a toggle linkage, and means controlled by one of said operating connections arranged to secure the return of the associated type member to its normal position when actuated through its alternate connection.

48. In a typewriting machine, a plurality of type actions each comprising a type member, a pair of supporting links for said type member, a lever for displacing the pivotal supports of the links, a pair of key levers for actuating the associated type member, an operating connection from one of the said pair of key levers including a cam lever arranged to actuate the associated type member, a second operating connection to the same type member from the other of said pair of associated key levers including a toggle linkage, and means coacting with said toggle linkage for insuring the correct return of its associated actuating connections when the type member is actuated through the connection including the cam lever.

49. In a typewriting machine, a plurality of type actions each comprising a type member, a pair of supporting links for said type member, a lever for displacing the pivotal support of a link, a pair of key levers for actuating said type member, an operating connection from one of said pair of key levers including a cam lever arranged to actuate the type member, a second operating connection to the type member from the other of said pair of key levers including a toggle linkage pivoted to said displacing lever, and means coacting with said toggle linkage for insuring its correct return to normal position when the type member is actuated through the connection including the cam lever.

50. In a typewriting machine, a plurality of type actions each comprising a type member, a pair of supporting links therefor, a lever for displacing the pivotal support of a link, a pair of key levers for actuating said type member, an operating connection from one of said key levers including a cam lever arranged to actuate the type member, a second operating connection to the type member from the other of said key levers including a toggle linkage pivoted to said displacing lever, a projection on said toggle linkage, and means actuated by the connection including the cam lever arranged to engage said projection, whereby the correct position of the type member is initially secured when actuated through the said cam lever.

51. In a typewriting machine, a plurality of type actions each comprising a type member, a pair of supporting links therefor, a displacing lever for displacing the pivotal support of a link, a pair of key levers for actuating said type member, an operating connection from one of said pair of key levers including a cam lever arranged to actuate the type member, a second operating connection to the type member from the other of said pair of key levers including a toggle linkage pivoted to said displacing lever, a projection on said toggle linkage, and a depending arm on said cam lever arranged to engage said projection, thereby insuring the return to normal position of the type member when it is actuated through the connection including the cam lever.

52. In a typewriting machine, a plurality of type actions comprising a type member, a pair of supporting links therefor, a displacing lever for displacing the pivotal support of a link, a pair of key levers for actuating said type member, an operating connection from one of said pair of key levers including a cam lever arranged to actuate the type member, a second operating connection to the type member from the other of said pair of key levers including a toggle linkage pivoted to said displacing lever, resilient means for retracting the type member, a stop for said toggle linkage when retracted, a projection on said toggle linkage, and a depending arm on said cam lever arranged to engage with the projection on said toggle linkage and return the type member to normal initial position.

53. In combination, a front stroke type-bar carrying a plurality of types disposed in the medial vertical plane thereof and arranged in sets, the plane of the printing faces of one set of types intersecting the plane of the printing faces of another set, a plurality of printing keys, and controlling means arranged to cause the type-bar to move through different curved paths to bring different types of different sets into a position of substantial coincidence with a common line that extends through the printing point and to move them along said line to the printing point, said controlling means including a pair of links on which the type-bar is supported and by which it is guided.

54. In combination, a platen, a front stroke type-bar carrying a plurality of types disposed in the medial vertical plane thereof and arranged in sets, the plane of the printing faces of one set intersecting the plane of the printing faces of another set, a plurality of independently operable printing keys, a plurality of operating connections, and means controlled thereby for causing

the type bar to move so that types of different sets move through different paths into a position of substantial coincidence with a line passing through the printing point, each active type moving from said position of coincidence substantially along said line for a substantial portion of the final part of each path of advance of the type toward the platen, said controlling means including a pair of links on which said type bar is supported, and means by which a pivotal center of at least one of said links is displaced by an actuation of one of said printing keys.

55. In combination, a platen, a type-bar carrying a plurality of types disposed in the medial vertical plane thereof and arranged in sets, the plane of the printing faces of one set intersecting the plane of the printing faces of another set, a quaternal linkage pivotally supporting said type bar, and a pair of key levers having operative connection with said type bar through said linkage and adapted to impart respectively a thrust and a pull, said connections being arranged to move the type-bar so that types of different sets move through different paths to a position of substantial coincidence with a common line which passes through the printing point.

56. In combination, a platen, a type-bar carrying a plurality of types disposed in the medial vertical plane thereof and arranged in sets, the plane of the printing faces of one set intersecting the plane of the printing faces of another set, a linkage supporting said type-bar, a motion governing means for the type-bar, and a pair of key levers having operative connection with said type-bar through said linkage and adapted to impart respectively a thrust and a pull and arranged to move the type-bar so that types of different sets move through different paths to a position of substantial coincidence with a common line which passes through the printing point, said linkage being proportioned and arranged so that the said common line will obtain for a substantial portion of the final part of each path of advance of an effective type toward the platen.

57. In combination, a platen, a flat type-bar movable in a vertical plane passing through the printing center and having a plurality of type blocks each carrying a set of types arranged one above another, the plane of the printing faces of one set intersecting the plane of the printing faces of the types of another set, a linkage pivotally supporting said type bar, motion governing means articulated to the type bar, a pair of key levers, and operating connections therefrom to said type bar through said linkage and arranged to impart respectively a thrust and a pull and to actuate said type member respectively through different paths to print from types on the different type blocks, said linkage being arranged to provide for the effective types of different sets having a travel in a line of substantial coincidence over a substantial portion of the final part of the respective paths of advance of said effective types toward the platen.

58. In combination, a platen, a flat type member having a plurality of heads carrying types disposed in a medial vertical printing plane, the printing faces of said types lying in planes which intersect, a linkage pivotally supporting said type member, said linkage including at least one displaceable axis of motion, and a pair of key levers having operating connections with said linkage arranged to impart respectively a thrust and a pull on and to orient said type member in respectively opposite directions during the advance of said member toward said platen, said linkage affording different paths of motion for said member towards said platen under the actuation of the different key levers, said paths of motion of the type member including a portion of coincident translation for a substantial part of the final advance of the type member toward the platen.

59. In combination, a platen, a front stroke thrust type-bar carrying a plurality of transversely arranged types on an end thereof, means for effecting an endwise printing movement of said type bar so that certain of said types move through oppositely disposed curvilinear paths to the same point of convergence approximate to the printing position and where the plane of the printing face of each effective type is substantially parallel with a plane tangent to the platen at the printing point and then moves through a substantially rectilinear path from said point of convergence to the printing position.

60. In combination, a platen, a type bar carrying a plurality of types, means for selectively moving said type bar so that certain of said types thereon will travel through different curvilinear paths according to selection to the same point approximate to the printing position and will finish their movement through a substantially rectilinear path from thence to the printing position with a decelerated movement.

61. In combination, a type-bar carrying a plurality of types, mechanism connected thereto for supporting the same for movement to and from a printing position, a key, connections between said mechanism and said key whereby the depression of said key will actuate said mechanism to bring one of said types to a point approximate to the printing position, a second key and connections between said second key and said mechanism for actuating said mechanism to move a second type to the same position, momentum accumulating mechanism adapted to

move said type-bar from said point approximate to a printing position, said connections between said keys, said supporting mechanism and said momentum accumulating mechanism being adapted to cause said momentum accumulating mechanism to produce substantially the same effective force at the printing position whether the type-bar be actuated by one or the other of said keys.

62. In a typewriting machine, a series of type actions each comprising a type bar, a pair of links supporting said bar and pivoted thereto at different points in the length of the bar, two keys, a train of actuating connections from one of said keys to the type bar to move it through one path to the printing point, and a separate train of connections from the other of said keys to one of said links to move the type bar through another path to the printing point.

63. In a system of type actions in which each action is controlled independently of the others to print from one or another type on a type bar in accordance with the actuation of one or another of two keys for such type bar, a type action comprising a type bar carrying a plurality of types, two actuating keys for said type bar, and intermediate connections between said keys and type bar to move the latter through one or another path depending on which of said keys is actuated, said connections including a lever on which the type bar is pivotally supported, and a pair of toggle members connected with said lever and normally maintained substantially in a straight line position to hold said lever against movement during the actuation of one only of said keys, the toggle members being broken from said substantially straight line holding position by the operation of the other of said keys.

64. In combination, a platen, a type-bar carrying a plurality of pairs of types, mechanism for moving and for supporting said type-bar for movement to bring a type of each pair to a position of coincidence approximate to the platen and to continue its travel thence to the printing point along a coincident line, said mechanism including separate trains of actuating devices one for each of said pairs of types on the type-bar, and a separately actuated key for each train, whereby each key will advance the type-bar to bring its corresponding pair of types to the same predetermined position, and shifting mechanism for relatively shifting said platen and type-bars for determining which one of any pair of types effects an imprint against the platen or the paper thereon in such predetermined position.

65. In a type action for typewriting and like machines, the combination of a type bar having a plurality of types thereon; two independently operable actuating keys therefor; and controlling means for controlling the path of movement of said type bar to print from one or another type thereon depending on which of said keys is actuated, said controlling means including a pair of toggle members normally maintained in a substantially straight line holding position, means controlled by one only of said keys for breaking the toggle members from such straight line position; and additional means by which the type bar may be driven by an actuation of either key.

66. A type action for typewriting machines comprising a type bar, a plurality of key levers, and intermediate actuating connections between said type bar and key levers by which the type bar is actuated to print one or another character depending on the key lever which is actuated, said connections including toggle links that are maintained in a substantially straight line quiescent condition during the actuation of the type bar by one key lever but are moved and broken from the straight line position by the actuation of another of said key levers.

67. In a typewriting machine, the combination of a shiftable platen; a case shift key therefor; a type bar having two pairs of types fixed thereon; two printing keys for said type bar; and actuating means for moving the type bar to printing position and for controlling its path and decelerating its movement at the last part of the printing stroke so as to impress the type in a substantially noiseless manner, said means including means controlled by one of said printing keys for moving the type bar in one path to print from one of two types of one pair depending on the case shift position of the platen, and means controlled by the other of said printing keys for moving the type bar in a different path to print from one of the two types of the other pair depending on the case position of the platen.

68. In a typewriting or like machine, the combination of a type bar mounted for bodily movement and having a plurality of types fixed thereon, motion governing means coacting with said type bar to decelerate the final printing movement of the type bar and cause it to make an imprint in a substantially noiseless manner, a plurality of printing keys, and means controlled thereby for controlling the paths of movement of said type bar to cause it to print selectively from one or another type thereon depending on which of said printing keys is actuated.

69. In a typewriting machine, the combination of a platen, a standard four-bank keyboard, a plurality of type-bars each having a plurality of types fixed thereon, path controlling means associated with each type-bar and controlled from a pair of printing keys in the keyboard to selectively print

from one or another type on the companion type bar depending on which of its pair of keys is actuated, and separate motion governing means coacting with each of said type-bars to decelerate its final printing movement and cause it to make an imprint in a substantially noiseless manner.

70. In a typewriting machine, the combination of a platen, a standard four-bank keyboard, a plurality of type bars each having a plurality of types fixed thereon, path controlling means associated with each type bar and controlled from a pair of printing keys in the keyboard to selectively print from one or another type on the companion type-bar depending on which of its pair of keys is actuated, separate motion governing means coacting with each of said type bars to decelerate its final printing movement and cause it to make an imprint in a substantially noiseless manner, and means for effecting a single relative case shifting movement between said platen and the type bars to thereby bring either of two other types on each type bar selectively into use depending on which of the associated pair of printing keys is actuated.

71. In a typewriting machine, the combination of a series of individually adjustable and detachable brackets that are radially disposed around the printing center, a pair of supporting and guiding links pivoted on each bracket, a type bar pivoted to and supported and guided by each pair of supporting links for general endwise printing movement, and type bar actuating devices supported by and adjustable with each of said brackets.

72. In a typewriting machine, the combination of a platen, a bodily movable type bar having two type blocks fixed thereon, each carrying two types the printing faces of which are in the same plane, the printing faces of the types on one type block being in a plane that converges with the plane of the type faces of the other type block, two supporting links on which the type bar is mounted and by which it is guided in its printing movement, two printing keys, means controlled thereby for controlling the pivotal center of at least one of said links thereby controlling the path of movement of the type bar to selectively print from a type on one or the other of the two type blocks in accordance with the printing key actuated, a case shift key, and means controlled thereby for effecting a relative case shift movement between the platen and type bar to render the other type on each type block effective to print in accordance with the printing key actuated.

73. In a typewriting machine, the combination with a platen, of a type bar carrying a plurality of types, said bar being mounted on a quaternate linkage pivoted to said machine, motion governing means articulated to said type bar and including a momentum accumulator operative to decelerate the final printing movement of the type bar and to translate into pressure against the platen the kinetic energy of the accumulator, a pair of printing keys having actuating connections to actuate selectively said type bar to print from one or another type thereon in accordance with the printing key which is actuated, and case shift mechanism for effecting a relative case shift movement between said platen and type-bar to bring one or another of a plurality of types on said type-bar into use.

74. In a typewriting machine, the combination of a type action bracket disposed in a vertical plane that radiates from the printing point, a front stroke type-bar, a pair of links supported on said bracket and by which said type-bar is supported and guided in its printing movement, type-bar actuating devices carried by said bracket, a plurality of printing keys operative to move said type-bar selectively to print from one or another type thereon in accordance with the key which is actuated, and means for individually adjusting said bracket together with the parts carried thereby without affecting said printing keys and for individually detaching said bracket together with the parts carried thereby.

75. In a typewriting machine, the combination of a machine frame, a type action bracket mounted thereon for individual detachment therefrom, a type-bar, and means for supporting the type-bar for bodily movement on the bracket including a member adjustable to different set positions on the bracket.

76. The combination of a supporting bracket, a type-bar, quaternate linkage by which the type bar is supported on said bracket, and means on said bracket for adjusting the type-bar thereon for obtaining an alignment of the type-bar relatively to the printing point.

77. In a typewriting machine, the combination of a machine frame, a type action bracket mounted thereon for individual detachment therefrom, a type-bar, and means for supporting the type-bar for bodily movement on the bracket including a member mounted for pivotal adjustment to different positions on said bracket, and an adjustable cam coacting with said member to adjust it.

78. In a typewriting machine, the combination of a machine frame, a type action bracket adjustably mounted thereon for movement towards and from the printing point, a type-bar, and means for supporting the type-bar for bodily movement on the bracket including a member pivoted for adjustment on the bracket and having an elon-

gated opening therein, and an adjustable cam in said opening and co-acting with said member to adjust it to different set positions around its pivot and hold the member against accidental displacement from the set position to which it is adjusted.

79. In a typewriting machine, the combination of a type-bar, a plurality of printing keys therefor, and means for selectively moving said type-bar through different paths and with a decelerated movement at the last part of the printing stroke to noiselessly print from one or another type on the bar with a pressure imprint depending on the key which is actuated.

80. In combination, a type bar, a pair of printing keys therefor, and actuating connections for operatively connecting said keys to the bar for controlling the printing movements of the latter, said connections including a toggle, the construction and arrangement of said connections being such as to restrain said toggle against movement in substantially a straight-line holding position upon the actuation of one of said keys and to operate said toggle to break it from such position by the actuation of the other key.

81. In combination, a typewriting machine, having a front plate, a bracket adjustably secured thereto, a type member having a pair of links pivotally supporting the same, a lever secured to said bracket and supporting one link, a floating lever pivotally supported by said bracket supporting the other link, and a pivotal connection between said levers.

82. In combination, a typewriting machine having a front plate, a bracket adjustably secured thereto and a type member having a pair of pivotal links for supporting the same from the bracket, a bell-crank lever pivotally supporting one link at its lower end, a floating lever pivotally supported to said bracket and connected to support the other link at its lower end, and a link connecting said floating lever to said bell-crank lever.

83. In combination, a type member carrying a plurality of type characters, a pair of links pivotally supporting the same, and a pair of levers pivotally supporting said links at their lower end; said levers being mechanically connected to be simultaneously actuated.

84. In combination, a front-stroke type member carrying a plurality of types disposed in the medial vertical plane thereof on one end of the bar and arranged in different horizontal planes, a pair of links pivotally supporting said member for general endwise printing movement, a bracket for supporting said links, a lever pivotally supporting one of said links to said bracket, and means for effecting an individual adjustment of said bracket together with the parts specified that are carried thereby.

85. In combination, a frame having a front plate, a bracket adjustably secured thereto, a type member having a pair of links supported on said bracket, and means on said bracket to adjust at will the pivotal support of one of said links.

86. In combination, a frame having a front plate, a bracket adjustably secured thereto, a type member having a pair of links supported on said bracket, and means on said bracket to adjust at will in a vertical plane the position of the pivotal support of the rear link.

87. In a typewriting machine, the combination with a frame having a front plate, of a platen, a bracket on said front plate, a type member having a pair of links for pivotally supporting the same, a pair of levers pivotally connected to said bracket respectively supporting said links, and means for adjusting at will the position of the pivotal support of one of said levers.

88. In a typewriting machine, the combination with a frame having a front plate, of a platen, a type member adapted to impress type characters against the printing surface of said platen, a bracket on said front plate, a pair of pivoted levers secured to said bracket, and a pair of links respectively pivoted to said levers and to said type member, whereby a quaternal linkage is provided; said levers being mechanically linked at their adjacent ends.

89. In a typewriting machine, the combination with a frame having a front plate, of a platen, a type member adapted to impress type characters against the printing surface of said platen, a bracket on said front plate, a pair of pivoted levers secured to said bracket, a pair of links respectively pivoted to said levers, a mechanical linkage between said levers, a pair of key levers for actuating the said type member, mechanical connections from one key lever to actuate said type member without moving its supporting levers, and a mechanical connection from the other key lever to one of said link supporting levers, whereby the initial position of said linkage is displaced when actuating the type member.

90. In a typewriting machine, the combination with a frame having a front plate, of a platen, a type member adapted to impress type characters against the printing surface of said platen, a bracket on said front plate, a pair of pivoted levers secured to said bracket, a pair of links respectively pivoted to said levers, a mechanical linkage between said levers, a pair of key levers for actuating the said type member, mechanical connections from one key lever to actuate said type member without moving its sup-

porting levers, and mechanical connections from the other of said key levers to said link supporting levers, whereby the initial position of said linkage is displaced when actuating the type member, and means for adjustably supporting one of said link supporting levers from said bracket.

91. In a typewriting machine, the combination with a frame having a front plate, of a platen, a type member adapted to impress type characters against the printing surface of said platen, a bracket on said front plate, a pair of pivoted levers secured to said bracket, a pair of links respectively pivoted to said levers, a mechanical linkage between said levers, a pair of key levers for actuating the said type member, mechanical connections from one key lever to actuate said type member without moving its supporting levers, and mechanical connections from the other of said key levers to said link supporting levers, whereby the initial position of said linkage is displaced when actuating the type member, and a lever pivotally supported on said bracket and connected to one of said link supporting levers to provide an adjustable pivotal support therefor.

92. In a typewriting machine, the combination with a frame having a front plate, of a platen, a type member adapted to impress type characters against the printing surface of said platen, a bracket on said front plate, a pair of pivoted levers secured to said bracket, a pair of links respectively pivoted to said levers, a mechanical linkage between said levers, a pair of key levers for actuating the said type member, mechanical connections from one key lever to actuate said type member without moving its supporting levers, mechanical connections from the other of said key levers to said link supporting levers, whereby the initial position of said linkage is displaced when actuating the type member, a lever pivotally supported on said bracket connected at one end to one of said link supporting levers and provided with an opening at its other end, and an adjustable cam on said bracket engaging with the opening in the end of said lever.

93. In a typewriting machine, the combination with a frame, of a platen, and a plurality of type actions each comprising a type member adapted to impress the types thereon against the paper on said platen, a pair of pivoted links arranged to support said type member, a pair of key levers having actuating connections arranged selectively to actuate said type member, one of said connections including means for individually displacing the axes of motion of said links of the associated type action only, an individual stop for said displacing means, and individual means for adjusting said stop.

94. In a typewriting machine, the combination with a frame having a front plate, of a platen, a type member adapted to impress type characters against the printing surface of said platen, a bracket on said front plate, a pair of pivoted links arranged to support said type member on said bracket, a pair of key levers having actuating connections arranged selectively to actuate said member, one of said connections including means to displace an axis of motion of one of said links, and an adjustable stop disposed on said bracket in the path of motion through which said axis is displaced.

95. In a typewriting machine, the combination with a frame having a front plate, of a platen, a type member adapted to impress types thereon against the paper on the platen, a bracket on said front plate, a pair of pivoted links arranged to support said type member on said bracket, a pair of key levers having actuating connections arranged selectively to actuate said type member, one of said connections including means to displace an axis of motion of at least one of said links, means on said bracket arranged to independently displace an axis of motion of one of said links to adjust the alignment of the type member relatively to the printing point, and additional adjusting means disposed in the path of motion of a part of said actuating connections through which said axis is displaced and providing an adjustable stop for the actuating connections.

96. In a typewriting machine, the combination of a standard keyboard of four banks of independently operable keys, an independently operable key lever for each of said keys, an independently operable actuating link controlled by each of said key levers, an end thrust type bar for each pair of keys in the keyboard, each type bar carrying a plurality of types fixed on an end thereof, and means intermediate each pair of actuating links and the associated type bar for actuating the latter and for individually effecting a selection in its path of movement to the printing point to print from one or another type thereon depending on which of the associated printing keys is actuated, said last mentioned means including two independently operable actuating devices controlled by said links and each of which is actuated only by its associated link, whereby a substantially uniform touch on the keys throughout the keyboard is provided.

In testimony whereof I affix my signature.

GEORGE GOULD GOING.

531

Dec. 15, 1925. 1,565,554

E. B. ERIKSEN

TYPEWRITING MACHINE

Original Filed April 18, 1922

Fig. 1.

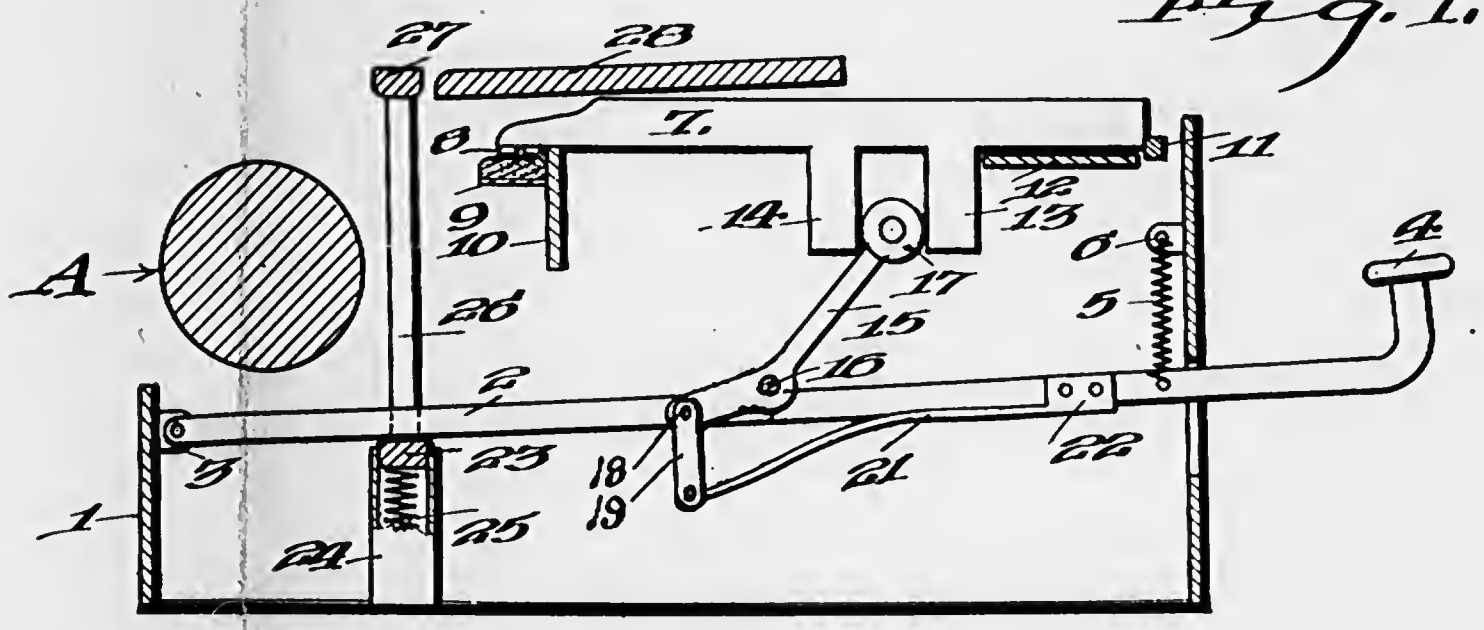

Fig. 2.

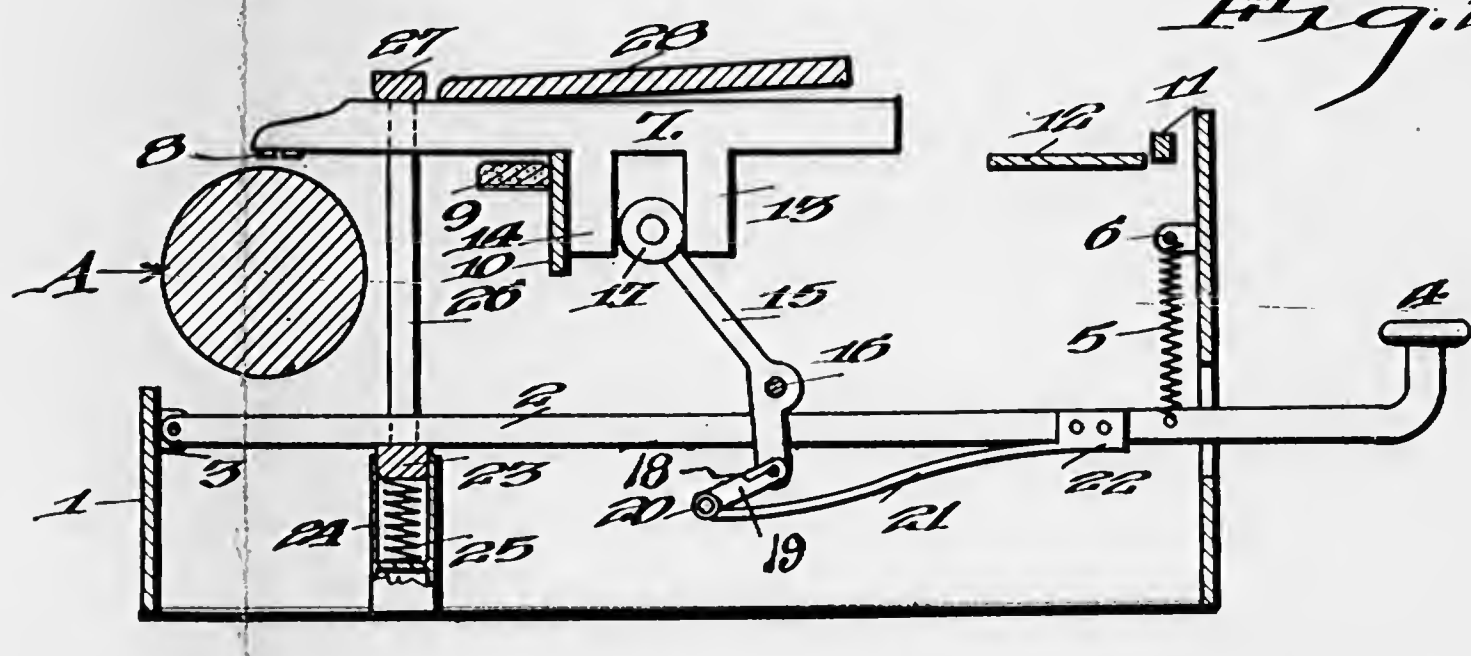

Fig. 3.

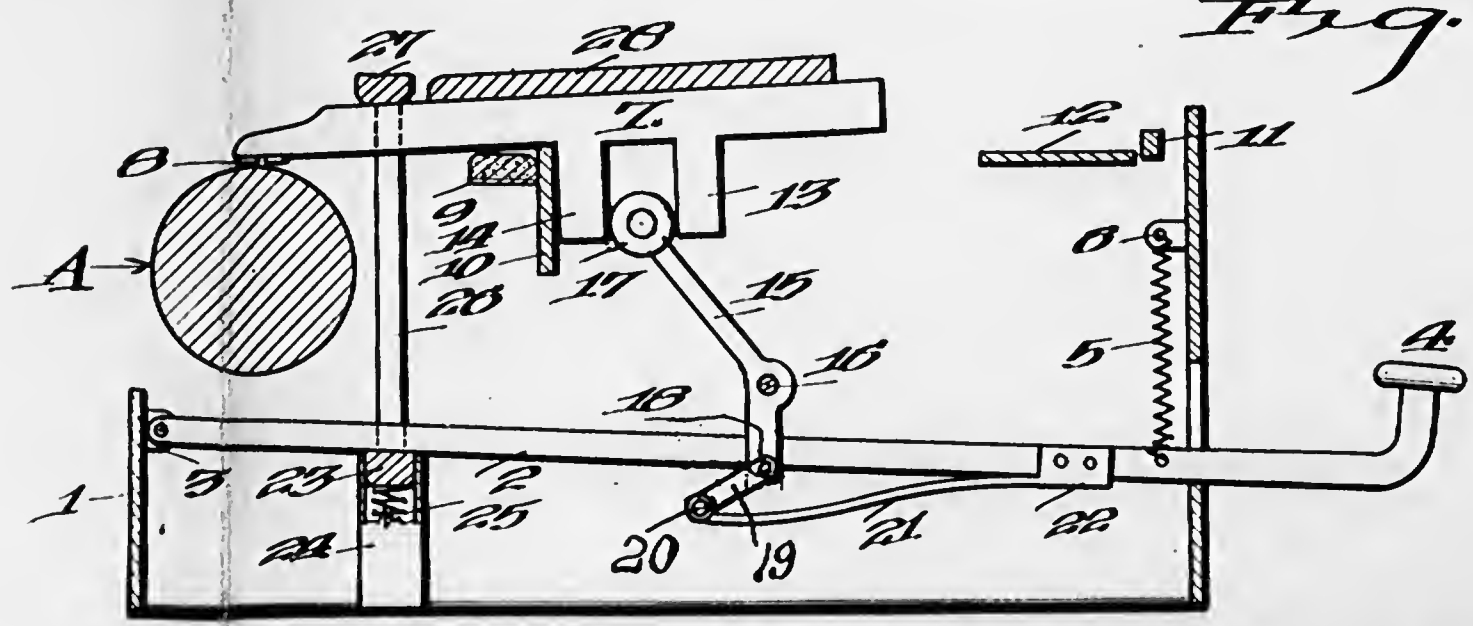

Inventor

Einar B. Eriksen.

Patented Dec. 15, 1925. 1,565,554

UNITED STATES PATENT OFFICE.

EINAR B. ERIKSEN, OF BROOKLYN, NEW YORK, ASSIGNOR, BY MESNE ASSIGNMENTS, TO BATES-ROEBLING PATENTS CO. INC., OF NEW YORK.

TYPEWRITING MACHINE.

Application filed April 18, 1922, Serial No. 555,496. Renewed March 12, 1925.

To all whom it may concern:

Be it known that I, EINAR B. ERIKSEN, a citizen of the United States, residing at Brooklyn, in the county of Kings and State of New York, have invented certain new and useful Improvements in Typewriting Machines, of which the following is a specification.

My invention relates to typewriting machines and particularly to a type action therefor. An object of my invention is to provide a type action that will be simple and efficient, but of such character that it can be embodied in a machine of small size.

Another object of the invention is to provide an action that will avoid the noise inherent in the usual swinging action employed in the larger number of machines at the present day.

Further objects will be apparent from the following detailed description and the appended claims.

In the drawings:

Figure 1 is a longitudinal section through the machine showing a single action with the parts in normal position.

Figure 2 is a similar view showing the parts in an intermediate position.

Figure 3 is a similar view showing the position of the parts at the moment of printing.

A frame 1 of any suitable shape and size has a key lever 2 pivoted thereto at 3. Said key lever is provided with a key 4 and is returned by a spring 5 connected at one end to the lever and at its other end to a lug 6 on the front plate of the frame. A type bar 7 normally lying in horizontal position has type 8 at one end thereof which rest on an inking pad 9 attached to or adjacent to a stop plate 10. The other end of the type bar 7 abuts against a stop 11 and rests on a guide 12. Depending from the lower side of the bar 7 are two arms 13 and 14. A bell crank lever 15 pivoted on a pivot rod 16 has a roller 17 on its upper end that lies in the space between the arms 13 and 14 and by its engagement with these arms produces the to and fro movement of the bar 7.

The lower arm of the bell crank has pivoted thereto at 18 a short link 19. Pivoted to the link 19 at 20 is a spring 21, the other end of which is fastened rigidly at 22 to the key lever 2. A universal bar 23 underlies the key levers and works in a guide 24 against a spring 25. This universal bar has an upright 26 near its center supporting at its upper end a bar 27 that overlies the type bar 7 when the latter is moved to overlie the usual platen A. A guide plate 28 overlies the type bar 7 and acts also as a stop plate at the end of the printing movement, as will be hereinafter described.

When the parts are in normal position, they will lie as in Figure 1. A depression of the key lever 2 will force down the spring 21 which will carry the link 19 with it and cause the bell crank 15 to rotate about its pivot 16, carrying the type bar 7 toward the platen as shown in Figure 2. When the parts have reached this position, the type 8 overlie the printing point and the arm 14 has come against the stop plate 10 limiting the longitudinal movement of the bar 7.

In the succeeding movement of the key lever, the lever 2 and the spring 21 will approach each other slightly and the lever 2 will press down the universal bar 23 against the force of the spring 25, thus pulling down on the bar 27 and pressing the type against the platen A. The type bar 7 will rock in this movement about a fulcrum formed by the top edge of the plate 10, and will be limited in its movement by its contact with the plate 28. At this time the parts will occupy the position shown in Figure 3. Upon the release of the key lever, the springs 5 and 23 will return the parts to normal position, the movement of the type bar being stopped by the stop 11 and the plate 12.

It will be noted that the movement of the type bar comprises two separate movements substantially at right angles to each other, the final movement being very short, about one-quarter of an inch, and the printing is produced by pressure rather than by the impact resulting from momentum. This eliminates substantially all of the noise that results from type actions of the usual kind.

It is further noted that the movement of the type bar in both directions is produced by a continuous movement of the key lever in one direction. The yielding spring 21 not only permits this result to be achieved, but cushions the downward movement of the key lever giving a very pleasant action.

While only one type action has been shown, it is understood that the entire system of type bars will be arranged in any

appropriate manner, each type bar on a line radiating from the printing point as a center. The key levers will be arranged in four banks with the universal keyboard. The top guide will be supported from the sides of the frame in any desired manner, and there may be one or more posts 26. All contacting parts will be provided with suitable buffer stops to avoid noise.

So far as the other instrumentalities of the machines are concerned, they may be of any desired type. The use of an inking pad 9 dispenses with the need of ribbon holding and driving mechanism and simplifies the structure to a great degree.

I claim as my invention:

1. In a typewriting machine, a type action comprising a type bar, a key lever, a bell crank lever, one arm of the bell crank lever engaging the type bar, a link pivoted at the other end of the bell crank lever, and a flat spring pivoted to said link at one end and rigidly fastened to the key lever at the other end.

2. In a typewriting machine, a type bar, a key lever, and operating connections between the type bar and the key lever including a flat spring rigidly attached to the key lever and a bell crank loosely engaging the type bar.

3. In a typewriting machine, a type action comprising a type bar, a key lever, intermediate connections between the type bar and the key lever comprising a spring by which the type bar is moved in one direction to a position opposite the printing point, and means operated by the key lever after the completion of the first movement and during the yielding of the spring to move the type bar in another direction to print.

4. In a typewriting machine, a type action comprising a type bar, a key lever, a bell crank lever having one end loosely engaging the type bar, an intermediate member connected to the other end of the bell crank lever, and a spring connected to the intermediate member and to the key lever, the first part of the movement of the type bar being in one direction and the latter part being in another direction and taking place as the spring yields.

5. In a typewriting machine, a type action comprising a sliding and rocking type bar, a key lever, a bell crank lever connected to the type bar, and connections from the bell crank lever to the key lever comprising a spring, the depression of the key lever to a certain point operating to slide the type bar through said connections, and means operated by the key lever on a further depression thereof permitted by the spring for rocking the type bar.

6. In a typewriting machine, a type action comprising a sliding type bar, a key lever, a bell crank lever loosely engaging the type bar, a link attached to the other end of the bell crank, and a flat spring rigidly fastened to the key lever and pivoted to the link.

7. In a typewriting machine, the combination of a sliding and rocking type bar, a stop for limiting its sliding movement, a key lever, operating means including a spring in the connections between the type bar and key lever which act to slide the type bar upon a depression of the key lever, and means operated by a further depression of the key lever after the sliding movement of the type bar has been stopped, to rock said type bar, said further depression being permitted by the yielding of the spring.

In testimony whereof I affix my signature.

EINAR B. ERIKSEN.

534

Feb. 16, 1926. 1,573,544

G. G. GOING

TYPEWRITING MACHINE

Filed Jan. 19, 1925 3 Sheets-Sheet 1

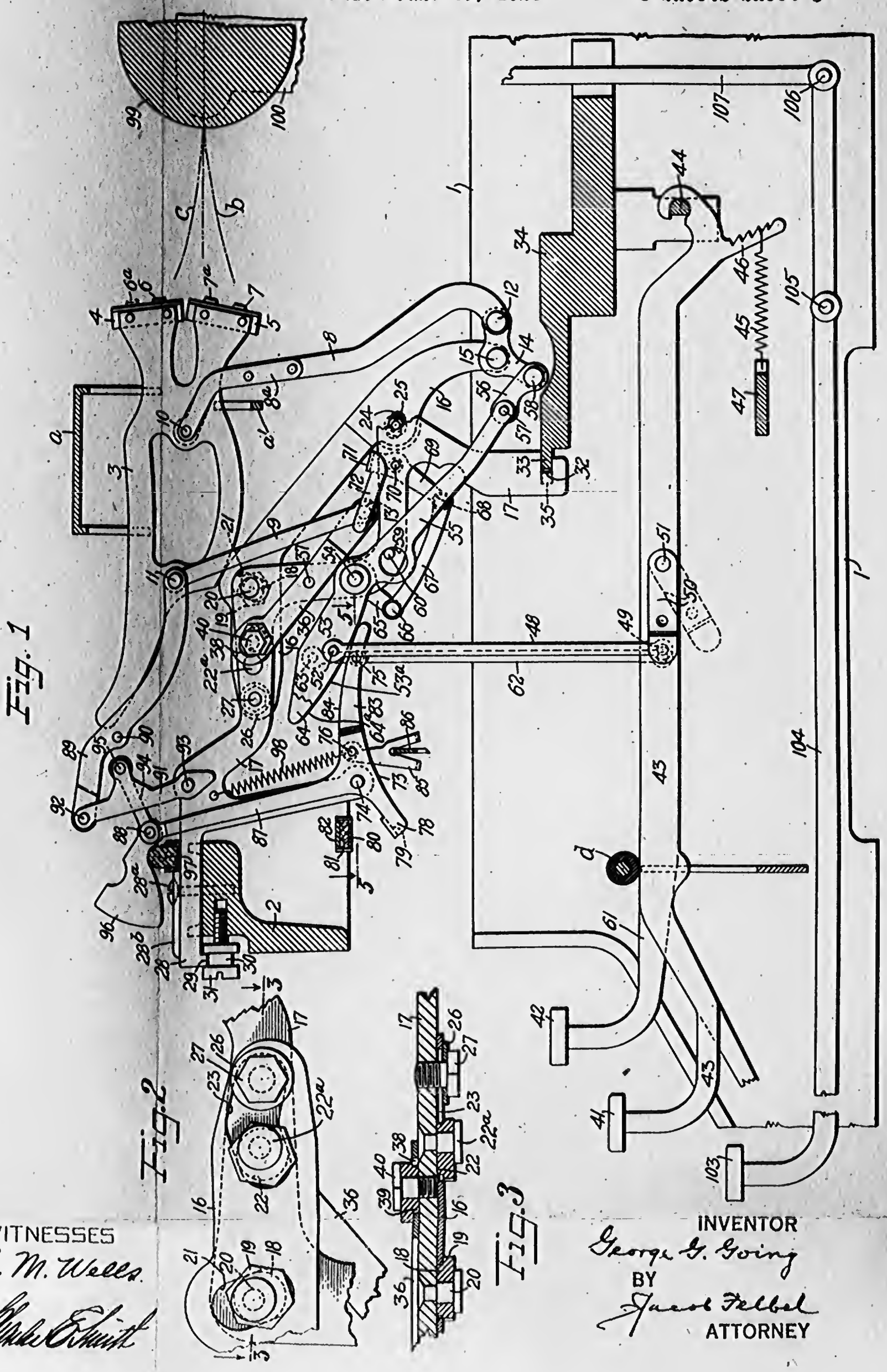

WITNESSES
E. M. Wells.
Walter E. Smith

INVENTOR
George G. Going
BY
Jacob Felbel
ATTORNEY

535

Feb. 16, 1926. 1,573,544

G. G. GOING

TYPEWRITING MACHINE

Filed Jan. 19, 1925 3 Sheets-Sheet 2

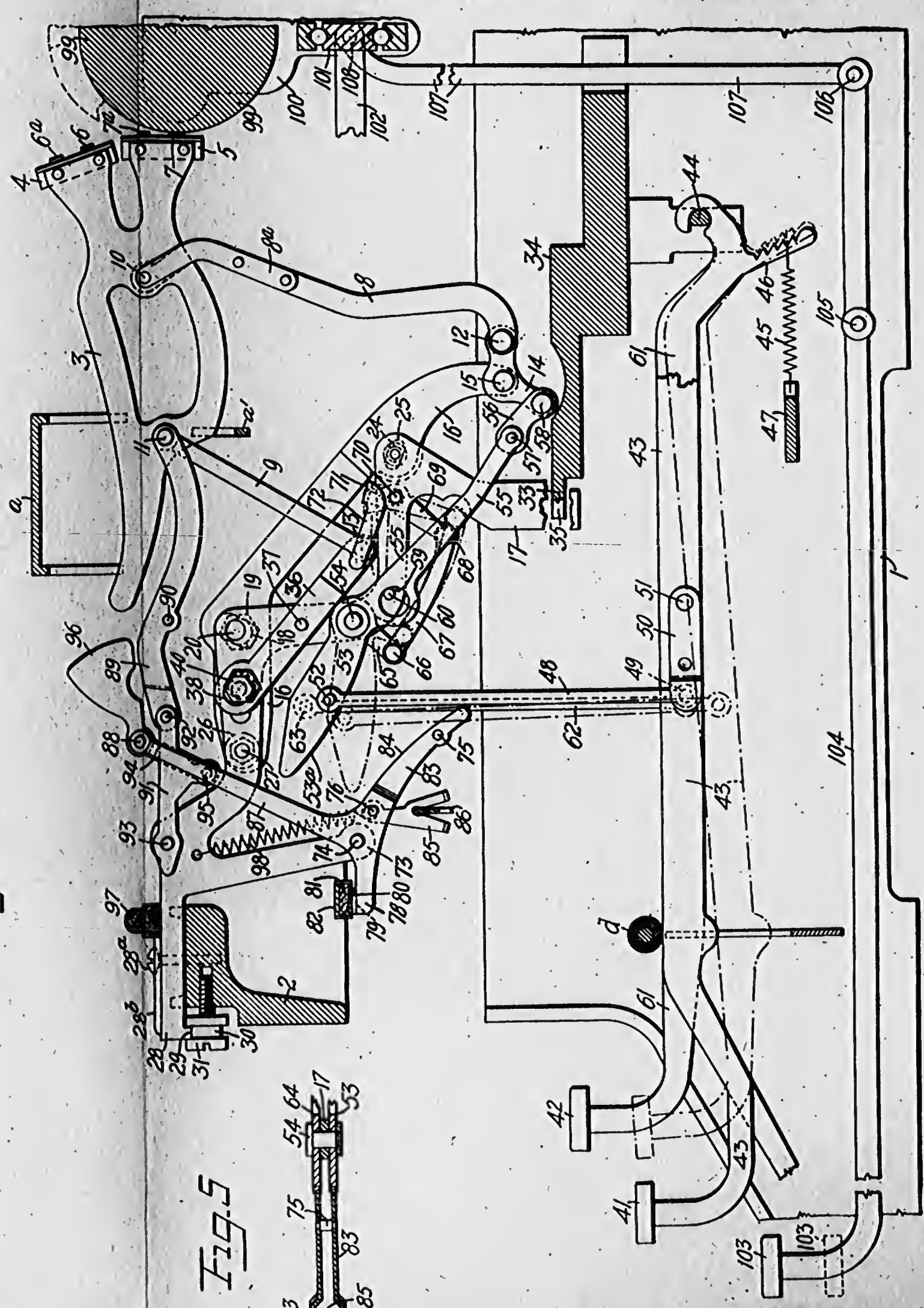

Fig. 4

Fig. 5

WITNESSES

E. M. Wells.

Walter E. Smith

INVENTOR

George G. Going

BY

Jacob Felbel

ATTORNEY

536

Feb. 16, 1926. 1,573,544

G. G. GOING

TYPEWRITING MACHINE

Filed Jan. 19, 1925 3 Sheets-Sheet 3

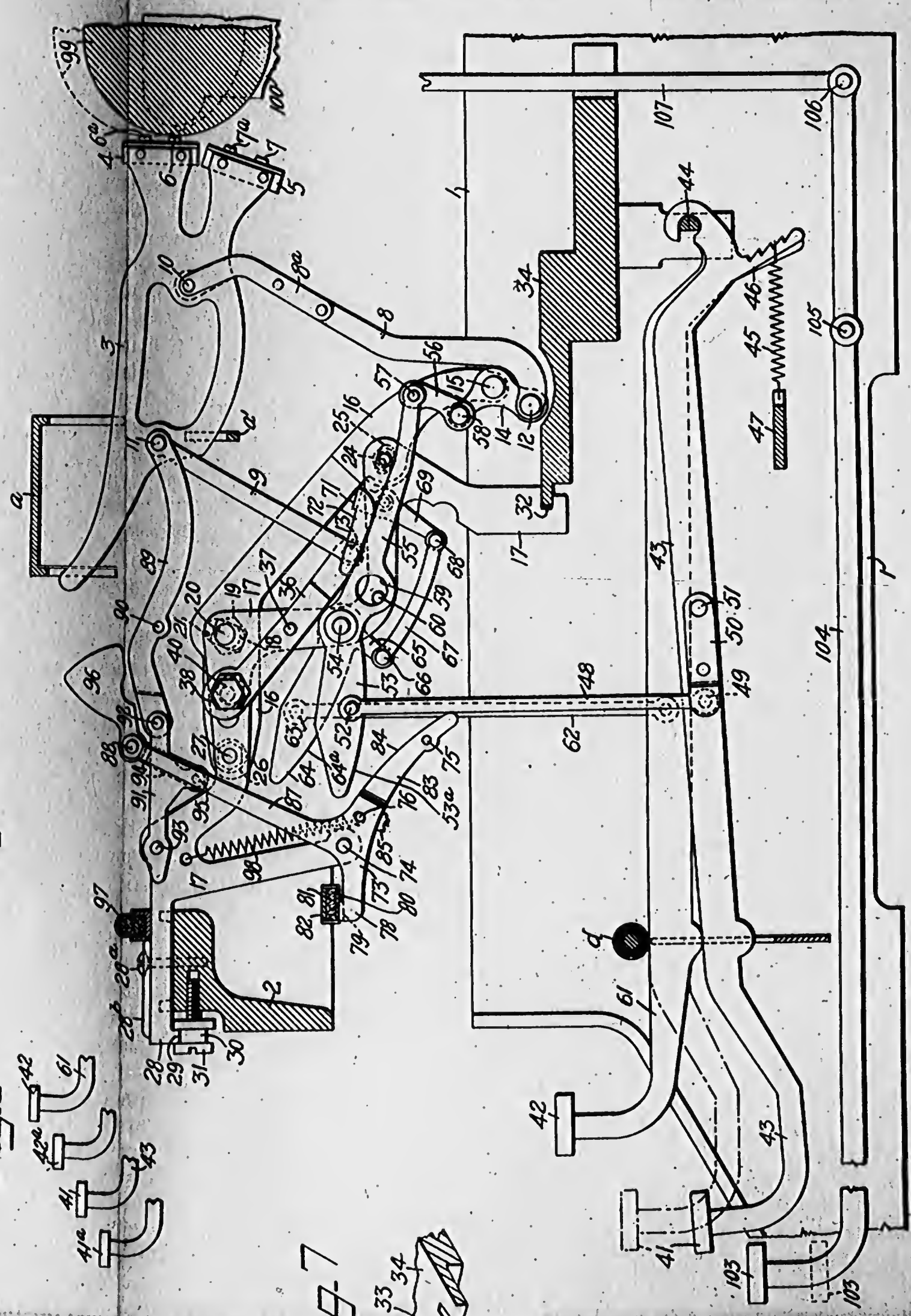

Fig. 6

Fig. 8

Fig. 7

WITNESSES

E. M. Wells.

Charles E. Smith

INVENTOR

George G. Going

BY Jacob Felbel

ATTORNEY

Patented Feb. 16, 1926. 1,573,544

UNITED STATES PATENT OFFICE.

GEORGE G. GOING, OF MIDDLETOWN, CONNECTICUT, ASSIGNOR TO REMINGTON-NOISELESS TYPEWRITER CORPORATION, OF NEW YORK, N. Y., A CORPORATION OF NEW YORK.

TYPEWRITING MACHINE.

Application filed January 19, 1925. Serial No. 3,365.

To all whom it may concern:

Be it known that I, GEORGE G. GOING, a citizen of the United States, and resident of Middletown, in the county of Middlesex and State of Connecticut, have invented certain new and useful Improvements in Typewriting Machines, of which the following is a specification.

My invention relates to typewriting or like machines and particularly to type actions therefor.

The main object of the invention, generally stated, is to provide an improved construction and arrangement of parts whereby the elements of each type action are functionally and structurally coordinated to facilitate printing in an improved manner.

More specifically stated, one of the objects of the invention is to provide improved and highly efficient type actions for printing without producing the noise that ordinarily results from the operation of the type actions.

A still further object of the invention is to provide an improved and highly efficient construction of the character specified in which the type actions are controlled from a standard keyboard with a single shift.

To the above and other ends which will hereinafter appear my invention consists in the features of construction, arrangements of parts and combinations of devices set forth in the following description and particularly pointed out in the appended claims.

In the accompanying drawings, wherein like reference characters indicate corresponding parts in the different views,

Figure 1 is a fragmentary central fore-and-aft sectional view of a typewriting machine embodying my invention.

Figure 2 is an enlarged detail fragmentary left-hand side elevation showing certain of the adjusting means for one of the type actions.

Figure 3 is a horizontal sectional view of the same taken on the line 3—3 of Figure 2 and looking in the direction of the arrows at said line.

Figure 4 is a view corresponding to Fig. 1, except that the type bar is shown in printing position under the control of one of its two keys.

Figure 5 is a fragmentary detail sectional view of a portion of one of the type actions, the section being taken on the line 5—5 of Fig. 1 and looking in the direction of the arrows at said line.

Figure 6 is a view corresponding to Fig. 4 except that the type bar is shown moved to the printing position under the control of the other of its printing keys.

Figure 7 is a fragmentary detail perspective view showing the manner of mounting each of the type action supporting brackets or hangers at the rear end thereof.

Figure 8 is a detail view showing the preferred arrangement of the printing keys.

The present invention is in the nature of an improvement on the construction disclosed in my co-pending application, Sr. No. 665,290, filed September 28, 1923. The improvements over the prior construction are intended in the main to render the operation of the type action more efficient, reliable and uniform throughout the system.

In the accompanying drawings I have shown only so much of a typewriting machine as is necessary to arrive at an understanding of my invention in its embodiment therein. I have shown my invention applied to a machine which, as to features outside of my invention, may be similar to that formerly known commercially as the noiseless typewriter.

As in the construction disclosed in my said co-pending application, I provide in the present instance a machine having a standard keyboard of four banks of keys, each type bar carrying four types and being operated by either one of two keys. Each pair of keys actuate a single front stroke type bar in a substantially noiseless manner to normally selectively print from one or another lower case type on the type bar, depending on which of the two keys is actuated, or to selectively print from one or another upper case type on the same type bar after a relative case shift has been effected between the platen and type bars.

In the present embodiment of my invention the frame of the machine may be said to include a base 1, and so-called front plate or member 2 on which various working parts of the machine, including the type actions, are supported. It will be understood that the type bars are arranged in a substantially horizontally disposed arc in front of and

around the printing point as a center, so that each type bar moves but a short distance in a radial plane to the common printing center as in the construction disclosed in my said companion application. The controlling means for each type bar, with the possible exception in some instances of the key lever therefor, moves in the same plane as the plane of movement of the associated type bar or as close to and parallel with such plane as the assembled parts will permit.

With the foregoing general statement I will proceed to describe a single type action, it being understood that all actions are alike or substantially so, except that they are mounted in different planes that radiate from the printing center. The description of one type action applies to the others.

Each type action comprises a flat substantially horizontally disposed type bar or type carrying member 3 provided with a plurality of type heads 4 and 5 fixed thereto. The type head 4 has a lower case type 6 and an upper case type 6ª, whereas the type head 5 has a lower case type 7 for printing a different character and a companion upper case type 7ª, the printing faces of the types on the two blocks being arranged in converging planes. Each type bar is guided against sidewise displacement in its printing movement by two arc-shaped guides *a* and *a'* having radial slots in which the type bars move. Each type bar is supported by a pair of links 8 and 9 pivoted respectively at 10 and 11 to the type bar at different points in the length thereof; the link 8 being pivoted to the type bar nearest the rear or type-carrying end thereof. The link 8 extends as one continuous member to the pivot 10 on one side of the type bar and has a thin sheet metal plate 8ª spaced apart from the body of the link but riveted thereto. This plate 8ª connects with the pivot 10 on the opposite side of the type bar. The links 8 and 9 are mounted to swing respectively on pivot pins 12 and 13 in the movement of the type bar from normal to printing position. In the present construction the pivot pin 13 always remains fixed during the travel of the type bar to printing position, but the pivot pin 12 is arranged to be displaced from normal position, as shown in Fig. 6, during the travel of the companion type bar under the actuation of one of its keys, as will hereinafter appear. The pivot pin 12 is mounted on a controlling member 14 which in the present instance is in the nature of a bell crank lever pivoted at 15 on a headed pivot pin secured to a stationary supporting member or arm 16. This supporting arm is adjustably secured on one side of a type action bracket or hanger 17 by which all associated parts of the type action except the key levers are mounted or supported. From certain aspects of my invention any suitable means for effecting an adjustment of the member 16 on the bracket 17 to different set positions may be provided. However, I prefer to employ the adjusting means disclosed herein as they have proved efficient in practice. The same is likewise true of other adjusting means to be described. The adjusting means for the arm 16 as best shown in Figs. 1, 2 and 3 comprises an eccentric 18 formed with an angular or hexagonal head 19 by which the eccentric may be turned on a headed pivot pin 20 riveted to the hanger 17. The eccentric 18 is received in an inclined slot 21 in the supporting arm 16 intermediate the ends thereof. A second similar adjustable eccentric 22 is carried on a pivot pin 22ª riveted to the hanger 17 and is received in a slot 23 in the arm 16 near the upper end thereof. A supporting pin or stud 24 is fixed on the hanger or bracket 17 and received within an inclined slot 25 in the arm 16 near the lower end thereof. This slot is inclined at about 19 degrees to the horizontal and extends lengthwise at about right angles to the length of the slot 21. The part of slot 23 in which the eccentric 22 is situated is parallel to the slot 25. The reasons for these angles will appear hereinafter. These adjustable means are effective to give the lower end of the arm 16 an adjustment in substantially any direction in the plane of said arm and to effect a corresponding adjustment of the pivot 15 and the parts carried thereby including the pivotal center 12 of the type bar supporting link 8. These adjustments aid in effecting a proper alignment of the type bar. In order to aid in preventing an accidental displacement of the arm 16 from the position to which it has been adjusted, I provide a binding washer 26 that bears against one side of the arm 16 near the upper end thereof. The stem of a headed screw 27 passes through this washer and through the slot 23 in the arm 16 and is received at its threaded end in a tapped opening in the hanger 17. By tightening this screw 27 the arm 16 is firmly held in its adjusted position against a side of the hanger or bracket 17.

It has been explained that a separate supporting bracket or hanger 17 is provided for each type action. These brackets are radially disposed around the printing point; means being provided whereby each bracket together with the parts of the type action carried thereby may be individually introduced into and removed from the machine as a separate unit, and may receive an individual adjustment radially toward and from the printing point. The construction that enables these results to be obtained is as follows: The forwardly horizontally disposed portion 28 of each bracket 17 is re-

ceived in a radially disposed slot in the top of the front plate 2 of the machine frame. A depending projection 29 at the forward end of each bracket is received in a circumferential groove 30 in a screw 31 threaded into a tapped opening in the front plate 2. The rear depending end of each bracket 17 is slotted at 32 (see Fig. 7) to receive the web 33 formed at the forward transversely slotted edge portion of a supporting member 34 secured to the base of the machine. The forward edge of the member 34 is segmental in form corresponding to the arrangement of the set of brackets 17 at the lower ends thereof and has interdental openings 35 therein; each corresponding in width to the thickness of the associated bracket 17. This construction provides a firm interlocking support between each bracket and the member 34 which holds the bracket against movement in every direction except that of its radial adjustment, effected by the companion screw 31. A screw 28[a] coacting with a clamping plate 28[b] holds the companion bracket firmly in its adjusted position and enables the bracket with the parts carried thereby to be readily detached as a separate unit when desired.

The pivot 13 for the supporting link 9, as previously stated, remains fixed at all times during the movement of the associated type bar. However, I prefer to make the pivot 13 independently adjustable to different set positions to vary the pivotal center of the supporting link 9 in order to further aid in obtaining proper alignment of the associated type bar. In the present construction I attain this end by mounting said pivot 13 at the lower end of an adjustable supporting member, arm, or lever 36, arranged on the opposite side of the bracket 17 from that which carries the arm 16; the member 36 being pivoted intermediate its ends to the bracket at 37. The upper end of this supporting member 36 has a slot 38 therein that extends longitudinally in the general direction of the length of said member, and in which an eccentric 39 is received. This eccentric 39 corresponds in construction to the eccentrics 18 and 22 but unlike them is mounted on a headed screw 40 threaded into a tapped opening in the bracket 17. An adjustment of the eccentric 39 on the screw 40 is effective to turn the supporting arm 36 in one direction or another around its pivot 37, effecting a corresponding adjustment of the pivot 13 for the supporting link 9. By tightening the screw 40 the eccentric 39 and the arm 36 are firmly held in adjusted position.

It should be understood that all of the adjusting eccentrics 18 and 22 are constructed and mounted in the same manner on the bracket 17; that each of said eccentrics as well as the eccentric 39 is provided with a suitable head, such as the hexagonal head 19, for co-operation with a suitable wrench or tool by which the companion eccentric may be individually adjusted; and that each eccentric 18 and 22 is held friction-tight in its adjusted position between the head of its pivot pin and the side face of the supporting bracket 17. When the arms 16 and 36 are once adjusted for purposes of aligning the companion type bar, such arms remain fixed, being thus held by the adjusting means and the clamping screws 27 and 40. The use of these adjustments will be explained in detail hereinafter.

Each type bar 3 is operated selectively by two keys, one of which automatically brings the upper and the other the lower pair of types on the bar to printing position. For lack of room in Figs. 1, 4 and 6, these two keys are there shown in adjacent banks, but in practice I prefer the arrangement indicated in Fig. 8 where keys 41 in the second bank and 42 in the fourth bank are connected to one type bar, and keys 41[a] in the first bank and 42[a] in the third bank to another type bar. In moving a type bar to printing position under the actuation of the key 42, the type 7 will follow a curved path indicated substantially by the dotted line *b*, if the parts have been properly adjusted. On the other hand, when the type bar is moved under the actuation of the key 41 the type 6 will follow a curved path of the general character indicated by the dotted line *c*. These curves are more nearly uniform, although they are oppositely disposed, than in my prior application. The means by which the paths of movement of a type bar are controlled include in part features which have been described including the bell crank lever 14 by which the pivotal center 12 of the supporting link 8 may be shifted back and forth from the Fig. 4 to the Fig. 6 position. I will now describe in detail how each type bar is controlled from its two printing keys.

The key 41 is carried by a key lever 43 fulcrumed at 44 in the base of the machine and provided with an individual returning spring 45. This spring is adjustably connected at one end to a depending arm 46 on said key lever, and connected at its other end with a bar 47 that extends beneath all of the key levers and is adjustably mounted by suitable means in the base of the machine. The key lever 43 is detachably connected to a link 48 by a pivot 49 carried by said key lever and received in an opening in the lower end of said link. A side-bearing spring plate or clip 50 is pivoted at 51 to the companion key lever and bears laterally at its free end against the link 48. This clip holds the link connected

to the lever when the clip is in the effective full line position, and enables the link to be detached from the lever when the clip is in the dotted line position shown in Fig. 1. The upper end of the link is pivoted at 52 to an actuating member, sub-lever or lever arm 53, pivoted at 54 on the right hand side of the bracket 17. This lever is extended rearwardly beyond its pivot to form a second lever arm 55 which constitutes one member of a controlling toggle. The other member of this toggle is a link 56 pivoted at one end, at 57, to the member 55 and at its other end, as at 58, to one arm of the bell crank lever 14. In order to limit the movement of the toggle member 55 and the parts connected therewith in both directions, I provide an opening 59 in said member 55 to receive a stop pin 60 fixed to and projecting laterally from one side of the bracket 17. This stop pin co-acting with one side wall of the opening 59, as shown in Fig. 1, will limit the return movement of the member 55 and the parts connected therewith. This prevents the toggle 55—56 in its return movement from breaking beyond the substantially straight line normal position. The effect of maintaining the toggle in the substantially straight line position is to hold the pivot 12 quiescent in the position shown in Figs. 1 and 4, when the type bar is moved to printing position by the actuation of the key 42, as will hereinafter more clearly appear. However, the depression of the key 41 results in moving the member 55 to the position shown in Fig. 6, where the opposite side wall of the opening 59 co-acting with the stop pin 60 limits the movement of said member 55 and the parts connected therewith, including the key 41. This depression of the key 41 results in breaking the toggle from the substantially straight line holding position shown in Fig. 1 to the operated position indicated in Fig. 6, thereby lowering and moving forward the pivotal center 12 of the type bar supporting link 8, to change the path of movement of the type bar to the printing position. The proper positioning of the pivot 12 in the Fig. 6 position and the holding of it in such position by the toggle is effected before the final printing movement of the type bar takes place.

The other printing key 42 of the type action shown is carried by a key lever 61, constructed, pivoted and individually spring returned, like the key lever 43 previously described. The key lever 61 is connected to a link 62 in the same manner that the link 48 is connected to its key lever 43, and has its upper end pivoted at 63 to an actuating member or sub-lever 64. Said sub-lever is arranged at the opposite side of the hanger 17 from the lever arm 53, and is mounted to turn on an extension of the pivot 54. The lever arms 53 and 64 forward of the pivot 54 are parallel with each other and are of like construction except that the arm 64 is provided with a depending lever arm 65. This arm 65 is pivoted at 66 to a link 67 which has its rear end pivoted at 68 to a lever 69. The lever 69 is pivoted at 70 on the left hand side of the bracket 17, and is bent or off-set laterally to form a yoke portion 71 above the bracket and is thence bent downward to form a lever arm 72 on the left hand side of said bracket and overlying the lever arm 55, for purposes which will now appear.

It will be understood that after each breaking of the toggle 55—56 from the Fig. 1 to the Fig. 6 position by an actuation of the key 41, the returning spring 45 for said key is intended to return it to normal straight line position when the operator releases the key. However, it may happen at times that the toggle 55—56 has not completely returned to the substantially straight line position before an actuation of the type bar by the other key 42 takes place. It is in order to rectify the position or insure the complete return of the toggle, and to thus maintain an accurate positioning of the pivotal center 12 in the Fig. 1 position, that I provide the lever 69—72 operating in the manner described. Thus it will be understood from a consideration of Fig. 4 that a depression of the key 42, as indicated in dotted lines in this figure, will, through the intermediate train of connections 62, 64, 65, 67 and 69, lower the arm 72 to the dotted line position. If the toggle 55—56 had not been fully returned after the preceding operation of the type bar by the key 41, then the member 55 will extend in the path of the arm 72, and as the latter is moved down to the dotted line position in Fig. 4 under the actuation of the key 42, the member 55 will be forced to the limit of its return movement, or until it co-acts with the stop 60 in the Fig. 4 position. This occurs before the type bar reaches the printing position under the action of the key 42, and insures the proper positioning of the pivotal center 12 and insures that a proper imprint of the type at the printing point will result.

Thus far I have described the means by which each type bar is individually guided or controlled in its movement to travel in one curved path or another to a common printing center, to cause one or another type thereon to print in accordance with the key 41 or 42 which is actuated. But I have not described the driving means by which each type bar is moved to printing position.

In the present construction I employ a single train of driving means or connections for each type action including motion

541

governing means having a momentum accumulator, said governing means being arranged to decelerate the final printing movement of the type bar and to translate into pressure against the platen the kinetic energy of the accumulator. It is due to such means, combined with the parts previously described, that an imprint may be effected in substantially a noiseless manner.

In the present construction, operating motion is transmitted to each type bar from both of its printing keys through the above mentioned single train of driving means to actuate each type bar with a substantially uniform touch from both its keys and to provide a uniform, or substantially uniform, touch on the keys throughout the system, as will now be more clearly described. This, it may be here remarked is regarded as an important factor of the present invention.

It has been explained that the independently operating lever arms 53 and 64, forward of their common pivot 54, are of uniform character and are mounted to move in parallel planes. A main driving lever 73 is provided for each type action, this lever being pivoted at 74 on the associated bracket 17. Referring to Figs. 5 and 6, it will be understood that in the present instance, I construct each of these levers from two correspondingl shaped members spaced apart and held together in spaced relation by suitable means, such as shouldered rivets 75 and 76 and other means to be described. A headed bushing 77 is seated in an opening in the bracket or hanger 17 and held in place therein by riveting one end of the bushing at 77[a]. The pivot pin 74 is received and turns in the bushing 77 and is riveted at its reduced ends to the companion members which constitute the lever 73. Each member of the lever 73 is provided with a forwardly extending arm 78 having an inwardly bent lug 79, said lugs having an edge-to-edge bearing one against the other. These lugs constitute a contact that is adapted at the limit of the operating movement of the lever 73 to bear upwardly against a suitable stop structure. Such stop structure, in the present instance, comprises a thin metal segmentally shaped contact strip 80 held against a correspondingly shaped pad 81. Said pad is fixed in or on a metal frame 82 secured to the frame of the machine, and having a contour that conforms to the pad. Rearwardly extending parallel arms 83 on the driving lever 73 each preferably has a curved contact or rolling tread 84. A curved or rolling tread 53[a] on the overlying lever 53 co-acts with one of the treads 84, whereas the corresponding rolling tread 64[a] (Fig. 6) on the overlying lever 64 co-acts with the other tread 84 on the driving lever. A depending link 85 is pivoted on the rivet 76 of each driving lever 73 and is forked at its lower end to co-act with a segmental universal bar 86 which controls the escapement (not shown) for the carriage. The driving lever 73 also has an upright double arm 87 comprising two corresponding parts which straddle the bracket 17 and are united at their upper ends by a pivot pin 88. This double arm 87 is connected to the associated type bar 3 through mechanical devices which, together with the main driving lever 73, constitute what has been hereinbefore referred to as a single train of driving connections including motion governing means having a momentum accumulator. Such means are effective to transmit a forward thrust to the type bar in a uniform manner whether actuated by one or the other associated keys 41 and 42. This train of connections includes a toggle comprising a double toggle link 89 made up of two correspondingly shaped members connected together but maintained spaced apart by a shouldered rivet 90. The forward end portions of the members of this double link 89 extend on opposite sides of the type bar and are connected thereto by the pivot 11 which also connects the supporting link 9 to the type bar. A second double toggle member 91 is made up of two correspondingly shaped united parts, which are maintained spaced apart. This double member is pivoted at 92 to the forward end of the link 89 and extends on opposite sides of the bracket 17 and is supported to turn on a fixed pivot 93 carried by the bracket. A single link or lever arm 94 is connected at one end by the pivot 88 to the upright double arm 87 of the main driving lever. The link 94 extends between the two members which constitute the toggle member 91 and is pivoted thereto at one end, as at 95, and it moves the toggle 89—91 to the substantially straight line position represented in Figs. 4 and 6, to apply printing pressure along the straight line of the toggle. Rigidly attached to the link or lever arm 94 is a comparatively heavy weighted member 96 which normally rests on a segmental supporting pad 97 and serves as a momentum accumulator for the actuating toggle 89, 91 when the latter is actuated by the main driving lever 73. After the depression of a printing key has been arrested, the momentum of the accumulator 96 will continue its movement to impart its energy to the toggle in order to complete the movement of the toggle members to the substantially straight line position, thereby completing the printing stroke of the type bar. It will be seen therefore that this momentum accumulator 96 is adapted to supply the final energy necessary to straighten the toggle 89—91 when the type bar has substantially reached the printing position. A contractile spring 98 is connected at one end to the bracket 17 and at the other end to the rivet 76 on the

driving lever 73, and serves to return the lever 73 and the parts connected therewith to the normal, Fig. 1, position after each actuation; the key lever being independently arrested in its return movement by a padded stop *d*. In arrangement and principle of operation the toggle mechanism just described is substantially the same as has been used heretofore in the noiseless typewriter, but some detail changes have been made to adapt it to the present mechanism.

In Fig. 6 the key 41 is shown in its extreme depressed position and the type 6 is pressed against the platen. In Fig. 4 the type 7 is pressed against the platen, and the corresponding or extreme depressed position of the key 42 is shown by broken lines. In both figures the last part of the stroke of the type bar was effected by the momentum of the weight 96 which has moved the arm 83 somewhat out of contact with the arm 53 or 64. In Fig. 4, therefore, the lever arm 72 had completed its stroke and assured the position of arm 55 and pivot 12 before the type 7 reached the platen; and in Fig. 6 the arm 55 had completed its stroke and thus brought pivot 12 completely to its lower position before the type 6 reached the platen.

The platen carriage and case shift mechanism are more or less conventionally represented. As shown in the present example, the platen 99 is carried by a suitable carriage 100 supported through intervening ball bearings (Fig. 4) on a case shift rail 101 to travel from side to side of the machine. The case shift rail is guided by links 102 and is mounted to receive, together with the carriage and platen, a single upwardly directed case shift movement from the normal position, represented in full lines, to the upper case position. The platen is shown in the last named position in dotted lines in Figs. 4 and 6. Any suitable means may be employed for this purpose. The conventional representation shown in the present instance, includes a case shift key 103 and a lever arm 104 carried by a rock shaft 105. The latter has two rearwardly extending arms each pivoted at 106 to a link 107, which in turn is connected at its upper end 108 to the case shift rail 101. In Fig. 4 I have shown a lower case type 7 on the type block 5 at the printing point under the action of the key 42, whereas in Fig. 6 I have shown a lower case type 6 on the type block 4 at the printing point under the action of the key 41. When the platen 99 is shifted to the upper case position, then one of the upper case types 6^a or 7^a will be selectively moved to the printing point, depending on which of the two associated keys 41 or 42 is actuated.

In order to actuate the type bar 3 and bring it to the position shown in Fig. 6, the key 41 is depressed. This transmits a pull through the link 48 to operate the sub-lever 53. The rolling tread on this lever co-acting with the companion rolling tread on the double arm 83 of the driving lever 73 gives a variable acceleration to the motion of the latter and also provides a lost motion connection between the levers 53 and 73. This lost motion is brought about when the motion of the lever 53, and the key 41 by which it is actuated, are brought to rest at the end of their stroke, as shown in Fig. 6. At this time the driving lever 73 and the parts connected therewith, including the type bar, are permitted to continue their operation independently of the lever 53, and under their own momentum, to effect an imprint without the impetus of the actuated key 41 and the parts connected therewith at the final portion of the printing stroke. The motion thus transmitted to the type bar is in the nature of a thrust exerted through the toggle members 89 and 91, pushing the type bar to the printing point, and by the final expenditure of energy apply a powerful printing press. The printing operation of the type bar by an actuation of the key 41, is accompanied by a displacement of the pivotal center 12 of the supporting link 8, as shown in Fig. 6. This is accomplished by breaking the toggle 55—56 from its substantially straight-line position, shown in Fig. 1, to the position, represented in Fig. 6, due to the actuation of the lever arm 53 with which the toggle has direct mechanical connection. This results in turning the lever 14 on its pivot 15 from the Fig. 1 to the Fig. 6 position as hereinbefore explained, thereby changing the position of the pivotal center 12 of the supporting link 8 and causing the type bar to travel through a different curved path from that which it follows when actuated by the key 42, as indicated by a comparison of the dotted lines *b*, *c* in Fig. 1.

An actuation of the type bar by the key 42 produces a like movement of the single train of connections from the driving lever 73 to the type bar. In this instance, however, the toggle 55—56 remains at rest in the substantially straight-line position, as indicated in Fig. 4, thereby holding the pivot 12 fixed against movement while the link 8 turns thereon. This results in the type bar moving in a curved path indicated substantially by the dotted line *b* in Fig. 1, to print from one or the other of the types 7 or 7^a, depending on whether the platen is in the lower or upper case position to receive the impress from the corresponding type.

The adjustments for the pivot pins 12 and 13 of the links 8 and 9 respectively are novel and are of such character as to enable the following results to be obtained:

(*a*) The type bar can be so adjusted when

in its Fig. 6 position as to cause the type block 4 properly to enter the center guide—that is to say, the rear end of the type bar can be adjusted up and down so as to bring the type 6 exactly to the printing point;

(*b*) The type bar can be adjusted angularly so as to set the types 6 and 6[a] on their feet;

(*c*) The type bar can be adjusted so that when in its Fig. 4 position the lower type block 5 is at the proper height up and down to enter the center guide and to bring the type 7 exactly to printing position, and this adjustment can be made without in any wise disturbing the adjustment formerly made with respect to the type 6. In other words, the up and down position of the rear end of the type bar can be adjusted for the Fig. 4 position without disturbing a previous adjustment made for the Fig. 6 position, thus compensating for any manufacturing error in the relative positions of the two type blocks on the rear end of the same type bar. One of the features which makes this result possible resides in the fact that the slot 25 and the rear part of the slot 23 in the support 16 are parallel to each other and are perpendicular to the line drawn through the centers of the pivots 12, 15 and 10 when the type bar stands in its Fig. 6 position. In the particular machine shown in the drawing this line 12, 15, Fig. 6, makes an angle of about nineteen degrees with the vertical, and the longitudinal axis of each of the slots 25 and 23 is at an angle of about nineteen degrees with the horizontal. It results from this construction that when the eccentric 18 is turned the effect is to slide the support 16 bodily rearward at a downward inclination of nineteen degrees, or forward at an upper inclination of nineteen degrees. In other words, the adjustment of the pivot 15 is perpendicular to the radius 15, 12 of the lever 14 when said lever is in its Fig. 6 position. The result is that for the small adjustment that is required, said adjustment being perpendicular to the radius, the pivot 12 receives practically no up and down motion due to the adjustment. This adjustment therefore, namely, the adjustment by turning the eccentric 18, has no effect on the position of the type 6 as shown in Fig. 6. Turning to Fig. 4, however, it will be seen that the adjustment just referred to will regulate the up and down position of the type block 5 and type 7 when these are in printing position. In this figure the pivot 58 occupies about the same position that the pivot 12 occupied in Fig. 6 and the radius 58, 15 is at an inclination of about nineteen degrees with the vertical. The effect of adjusting the point 15 in the manner above described is therefore to rock the lever 14 about the pivot 58 as a center, with the result that the pivot 12 of the link 8 is moved up or down. It will thus be seen that the printing position up and down of the type 7 can be regulated by this adjustment independently of the printing position of the type 6.

In order to regulate the up and down position of the said type 6, the eccentrics 22 and 39 are used. Referring to Fig. 6 an adjustment of the eccentric 39 moves the pivot 13 lengthwise of the link 9 one way or the other. An adjustment of the eccentric 22 moves the pivot 15 in the direction of the length of the link 8. If, for example, the type 6 is too high when first brought to the Fig. 6 position it can be lowered either by adjusting the pivot 15 downward or by adjusting the pivot 13 upward. When it has been brought to the proper height by one or the other of these means it may be found that the type is not on its feet; that is to say, that the plane of the types 6 and 6[a] is not exactly tangential to the platen at the printing line. If, for example, the type bar is found to be tilted backward, bringing the type 6[a] too close to the platen, this can be corrected by lowering both of the pivots 15 and 13, the pivot 13 being lowered more than the pivot 15, in such relation that the adjustment of the type bar would be in the nature of a swinging of the front end of the type bar downward about the type face 6 as a center. If the error was in the opposite direction the adjustment would of course be the reverse.

In practice the type bar is first adjusted correctly to the Fig. 6 position by adjustments at 22 and 39. Afterward the type bar is brought to the Fig. 4 position and adjusted by means of the eccentric 18 to bring the type 7 and type block 5 into correct up and down position. As has been explained, this does not disturb the previous adjustment made with respect to the upper types.

It will be seen that the adjusting means for each type action are located at the forward and upper portion thereof where ample widthwise space is provided between actions and ready access to the adjusting means from above may be had.

The construction and relative arrangement of the parts of each type action is such that near the rear or type-bearing end of the action the mechanism is thin as viewed from above, and even at its point of maximum thickness which is more remote from the center from which the type actions radiate, each action has a thickness of only about $\frac{5}{32}$ of an inch, thus enabling twenty-two type actions to be conveniently brought into a comparatively small widthwise space without unduly crowding them, and to effectively print in substantially a noiseless manner, the requisite number of characters with the aid of a standard keyboard and a single case

shift. Moreover, the construction is such that it readily lends itself to the employment of more than the usual eighty-four characters when desired, and provides a light, fast and highly efficient type action with a substantially uniform touch on the printing keys throughout the system.

It will be seen that in the present construction the supporting and guiding links 8 and 9 merely act as such at all times, the driving operation of the type bar being never effected through said links; and that whether the type bar be driven by the actuation of one or the other of the keys 41 or 42 such driving operation as such is effected independently of said links and always through the separate and distinct single driving train from and including the lever 73 which exerts at all operations a thrust on the type bar to move it to printing position always in a uniform manner.

It will be understood, moreover, that the pivotal support for the link 9 is at all times maintained fixed during the printing operation whether operating the type action from the key 41 or 42 and that the present construction as a whole provides a type action which has a light touch, is speedy in operation, and results to a high degree in a simple, uniform, accurate, noiseless and reliable printing operation that may be controlled by a standard keyboard.

In addition to the type bar guides *a* and *a'*, hereinbefore referred to, I prefer to employ a suitable type bar center guide, not shown.

The linkage by which the type bar is guided includes a number of joints or pivots, all of which are free moving joints; but notwithstanding, it is found in practice that the types strike the paper in good alignment. The platen and carriage are mounted and controlled the same as in the well known noiseless typewriter, and said platen yields rearward at each imprint of a type, something like five one-thousandths of an inch.

Due to the particular manner in which the type bar is moved while the type is acting on the paper, I obtain increased manifolding effectiveness in the present machine. As the type comes in contact with the paper before the final straightening of the type bar such type rolls or kneads its way on the paper to final printing position. This kneading effect is due to the manner in which the type bar is controlled by its supporting [illegible] linkage. When the type face first presses against the paper it does not contact quite squarely, the upper part of the type being slightly in advance. The bar is then caused to rock or cant downward so as to bring every portion of the type face successively under the pressure of the driving toggle. In thus slightly changing the angular relation of the printing face of a type while it is making the impression, I obtain a rolling or kneading of the carbon against the paper, thus producing a stronger and better carbon imprint.

While I have described in considerable detail the constructional form of the various members which go to make up each type action, I am aware that various changes may be made in the construction, and that certain parts thereof may be employed without others, without departing from my invention as it is defined in the accompanying claims. However, the form of construction shown and described has proven reliable and efficient in use.

What I claim as new and desire to secure by Letters Patent is:—

1. In a typewriting or like machine, the combination in a type action of a type bar having a plurality of types, a pair of keys therefor each operative to print from one or another of the said types depending on the key actuated, a driving member, intermediate actuating connections between said driving member and type bar including governing means having a momentum accumulator and arranged to decelerate the final printing movement of the type bar and to translate into pressure against the platen the kinetic energy of the accumulator, and means controlled by both of said keys for actuating the type bar through said driving member and governing means.

2. In a typewriting or like machine, the combination of a series of front stroke type actions each comprising an end thrust type bar having a plurality of types which extend transversely thereof, a pair of key levers, means controlled by one of said key levers for changing the path of movement of the individual associated type bar only for printing from one or another type on the bar depending on the key lever which is actuated, a driving lever connected with the type bar for always driving it in the same manner irrespective of which key lever of the pair is actuated, and a separate independently operative train of connections from each of said pair of key levers to said driving lever for actuating it and driving the type bar therefrom, whereby the associated type bar may be selectively and individually controlled and actuated by both key levers with a substantially uniform touch.

3. In a typewriting or like machine, the combination of a platen, a type bar having a plurality of types, a plurality of type bar actuating keys therefor, means controlled by said keys for determining the path of movement of said type bar to print from one or another type thereon in accordance with the key actuated, and driving connections from each of said keys to the type bar and through which the type bar is driven from

said keys, said driving connections including motion governing means common to and actuated by both keys and having a momentum accumulator, the governing means being arranged to decelerate the final printing movement of the type bar and to translate into pressure against the platen the kinetic energy of the accumulator.

4. In a typewriting or like machine, the combination of a platen, a type bar having a plurality of types, a plurality of type bar actuating keys therefor, means controlled by said keys for determining the path of movement of said type bar to print from one or another type thereon in accordance with the key actuated, and driving connections from each of said keys to the type bar comprising a driving lever actuated by both keys, and governing means intermediate said driving lever and the type bar and through which the type bar is driven, said governing means having a momentum accumulator and arranged to decelerate the final printing movement of the type bar and translate into pressure against the platen the kinetic energy of the accumulator.

5. In a typewriting or like machine, the combination of a platen; a type bar having a plurality of types; a plurality of type bar actuating keys therefor; means controlled by said keys for determining the path of movement of said type bar to print from one or another type thereon in accordance with the key actuated; and driving connections from each of said keys to the type bar comprising a driving lever, independently operable sub-levers one controlled by each key and each operative on said driving lever to actuate it, and governing means intermediate said driving lever and type bar and having a momentum accumulator, said governing means being arranged to decelerate the final printing movement of the type bar and translate into pressure against the platen the kinetic energy of the accumulator.

6. In a typewriting or like machine, the combination of a platen, a type bar having a plurality of types; a plurality of type bar actuating keys therefor; means controlled by said keys for changing the path of movement of said type bar to print from one or another type thereon in accordance with the key actuated; and driving connections from each of said keys to the type bar, which connections from each key are functionally distinct from though in one instance are operated in conjunction with said path changing means, said driving connections including governing means arranged to decelerate the final printing movement of the type bar and translate into pressure against the platen the kinetic energy of the governing means.

7. In a typewriting or like machine, the combination of a machine frame; a carriage; a platen carried thereby; a plurality of individually adjustable supporting brackets one for each type action secured to the frame of the machine; and a plurality of type actions each comprising a type bar having a plurality of types, a pair of supporting links therefor pivotally supported by one of said brackets, a pair of keys, connections under control of said keys for controlling the path of movement of the associated type bar to print from one or another type thereon depending on which of said keys is actuated, and additional means controlled by both of said keys for effecting a thrust of the type bar throughout its printing movement by an actuation of either key.

8. In a typewriting or like machine, the combination in a type action of a type bar, a pair of pivotally supported supporting links therefor, a pair of actuating keys, means controlled by one of said keys for displacing from normal position a pivotal support for one of said links, means controlled by a subsequent operation of the other of said keys for positively assuring the restoration of said displaced pivotal support to normal position, and a single driving member connected with the type bar and which is actuated in a like manner by both of said keys.

9. In a typewriting or like machine, the combination in a type action of a type bar, a pair of pivotally supported supporting links therefor, a pair of actuating keys, means including a toggle controlled by one of said keys for displacing from normal position a pivotal support for one of said links, means controlled by the subsequent operation of the other of said keys for positively straightening said toggle, thereby assuring the restoration of said displaced pivotal support to normal position, a single train of driving connections, and means controlled by both keys for actuating said single train of driving connections in a like manner to actuate the type bar.

10. In a typewriting or like machine, the combination in a type action of a type bar, a pair of pivotally supported supporting links therefor, a pair of actuating keys, means including a toggle controlled by one of said keys for displacing from a normal position a pivotal support for one of said links, means controlled by the subsequent operation of the other of said keys for positively straightening said toggle, thereby assuring the restoration of said displaced pivotal support to normal position, a driving lever connected with said type bar, and a pair of independently operable levers both co-operative with said driving lever and each operated by only one of said keys.

11. In a typewriting or like machine, the combination in a type action of a type bar, a pair of pivotally supported supporting links therefor, a pair of actuating keys, means including a toggle controlled by one

of said keys for displacing from normal position a pivotal support for one of said links, means controlled by the subsequent operation of the other of said keys for positively straightening said toggle, thereby assuring the restoration of said displaced pivotal support to normal position, a driving lever, intermediate connections between said driving lever and type bar including governing means having a momentum accumulator and arranged to decelerate the final printing movement of the type bar and to translate into pressure against the platen the kinetic energy of the accumulator, and actuating devices controlled by said keys for actuating said type bar through said driving lever and governing means.

12. In a typewriting or like machine, the combination in a type action of a type bar, a pair of pivotally supported supporting links therefor, a pair of actuating keys, means controlled by one of said keys for displacing from normal position a pivotal support for only one of said links, and means controlled by the other of said keys for positively assuring the restoration to normal position of the displaced pivotal support.

13. In a type action for a typewriting or like machine, the combination of a type bar having a plurality of types thereon, a pair of pivotally supported supporting links therefor, two actuating keys for the type bar, and controlling means for controlling the path of movement of said type bar to print from one or another type thereon in accordance with the key actuated, said controlling means including a pair of toggle members broken from a substantially straight line normal position by one only of said keys to shift the pivotal support of one of said links independently of the other.

14. In a type action for a typewriting or like machine, the combination of a type bar having a plurality of types thereon; a pair of pivotally supported supporting links therefor; two actuating keys for the type bar; controlling means for controlling the path of movement of said type bar to print from one or another type thereon in accordance with the key actuated, said controlling means including a pair of toggle members broken from a substantially straight line normal position by one only of said keys to shift the pivotal support of one of said links independently of the other; a single train of connections for moving the type to printing position; and means controlled by both of said keys for moving said single train of connections.

15. In a type action for a typewriting or like machine, the combination of a type bar having a plurality of types thereon; a pair of pivotally supported supporting links therefor; two actuating keys for the type bar; controlling means for controlling the path of movement of said type bar to print from one or another type thereon in accordance with the key actuated, said controlling means including a pair of toggle members broken from a substantially straight line normal position by one only of said keys to shift the pivotal support of one of said links independently of the other; and driving connections from both keys to said type bar including motion governing means having a momentum accumulator and arranged to decelerate the final printing movement of the type bar and to translate into pressure against the platen the kinetic energy of said accumulator.

16. In a type action for a typewriting or like machine, the combination of a type bar having a plurality of types thereon; a pair of pivotally supported supporting links therefor; two actuating keys for the type bar; and controlling means for controlling the path of movement of said type bar to print from one or another type thereon in accordance with the key actuated, said controlling means including a pair of toggle members broken from a substantially straight line normal position by one only of said keys to shift the pivotal support of one of said links independently of the other and means controlled by the other of said keys for restoring the broken toggle to normal position.

17. In a type action for a typewriting or like machine, the combination of a type bar having a plurality of types thereon; a pair of pivotally supported supporting links therefor; two actuating keys for the type bar; controlling means for controlling the path of movement of said type bar to print from one or another type thereon in accordance with the key actuated, said controlling means including a pair of toggle members broken from a substantially straight line normal position by one only of said keys to shift the pivotal support of one of said links independently of the other; a pair of type bar actuating levers each controlled independently of the other by an associated one of said keys; and a third actuating lever operatively connected with the type bar and with which said pair of actuating levers coact to drive the type bar.

18. In a type action for a typewriting or like machine, the combination of a type bar having a plurality of types thereon; a pair of pivotally supported supporting links therefor; two actuating keys for the type bar; controlling means for controlling the path of movement of said type bar to print from one or another type thereon in accordance with the key actuated, said controlling means including a pair of toggle members broken from a substantially straight line normal position by one only of said keys to shift the pivotal support of one of said links

independently of the other; a pair of type bar actuating levers each controlled independently of the other by an associated one of said keys; and a third actuating lever operatively connected with the type bar and with which said pair of actuating levers coact to drive the type bar, there being a rolling tread between each of said pair of actuating levers and the third lever controlled thereby.

19. In a type action for a typewriting or like machine, the combination of a type bar having a plurality of types thereon; a pair of pivotally supported supporting links therefor; two actuating keys for the type bar; controlling means for controlling the path of movement of said type bar to print from one or another type thereon in accordance with the key actuated, said controlling means including a pair of toggle members broken from a substantially straight line normal position by one only of said keys to shift the pivotal support of one of said links independently of the other; a pair of type bar actuating levers each controlled independently of the other by an associated one of said keys; a third actuating lever with which said pair of actuating levers coact; and governing means interposed between said third actuating lever and the type bar, said governing means having a momentum accumulator and arranged to decelerate the final printing movement of the type bar and to translate into pressure against the platen the kinetic energy of said accumulator.

20. In a typewriting or like machine having a series of type actions each comprising a type bar having a plurality of types; a pair of actuating keys; and intermediate connections for moving the associate type bar through oppositely disposed substantially symmetrical curved paths to a common printing center, the path of movement of a type bar through one or the other curved path to print from one or another type depending on the associated key actuated, said connections including a main type bar driving lever, and a pair of independently operable driving levers each controlled by one of said keys and both co-acting directly with said main driving lever, a rolling contact being provided between said main driving lever and each of said co-acting driving levers.

21. In a typewriting or like machine having a series of type actions each comprising a type bar having a plurality of types; a pair of actuating keys; and intermediate connections for moving the type bar through oppositely disposed substantially symmetrical curved paths to a common printing center, the path of movement of a type bar through one or the other curved path to print from one or another type depending on the associated key actuated, said connections including a main type bar driving lever, a pair of independently operable driving levers each controlled by one of said keys and both co-acting directly with said main driving lever, and governing means intermediate said main driving lever and type bar, said governing means having a momentum accumulator and being arranged to decelerate the final printing movement of the type bar and to translate into pressure against the platen the kinetic energy of said accumulator.

22. In a type action for typewriting or like machines, the combination of a type bar carrying a plurality of types, supporting means therefor, a pair of actuating keys, key controlled connections for controlling said supporting means to print from one or another type on said type bar depending on the key actuated, a single train of driving connections for the type bar including a momentum accumulator operative by its kinetic energy to move the type bar from a point approximate to the printing position, and independently operable driving connections of a uniform character from each of said keys to said single train of driving connections, whereby the touch for both keys is rendered substantially uniform.

23. In a type action for typewriting or like machines, the combination of a machine frame, a bracket secured thereto, a type bar having a pair of supporting links supported on said bracket, and individual means on said bracket for separately adjusting at will to different set positions the pivotal supports for said links.

24. In a type action for typewriting or like machines, the combination of a machine frame, a bracket secured thereto, a type bar having a pair of supporting links supported on said bracket, and means on said bracket for independently adjusting at will to different set positions the pivotal support of the link nearest the type carrying end of said type bar.

25. In a type action for typewriting or like machines, the combination of a machine frame, a supporting bracket, means for adjusting said bracket to different set positions on said frame, a type bar having a pair of supporting links supported on said bracket, and means on said bracket for independently adjusting at will to different set positions the pivotal support of the link nearest the type carrying end of said type bar.

26. In a typewriting or like machine, the combination of a machine frame; a system of type actions, each comprising a bracket; means for individually adjusting each bracket to different set positions on the frame of the machine; a type bar supported by each bracket; a pair of links which form the support for each type bar on its bracket;

and means on each bracket for separately adjusting at will to different set positions the companion pivotal supports for the associated type bar.

27. In a type action for typewriting or like machines, the combination of a type bar having a plurality of types; two actuating keys; and means controlled thereby for causing the type bar to print from one or another type thereon depending on the key actuated, said means comprising two supporting links for the type bar, one of which turns on a pivotal center that remains unaffected by the operation of both of said keys, means for individually shifting the pivotal center of the other link under the action of the one key and for maintaining it quiescent under the action of the other of said keys, and driving connections controlled by both keys and which include governing means that decelerate the final printing movement of the type bar and translate into pressure against the platen the kinetic energy of the driving means.

28. In a type action for typewriting or like machines, the combination of a type bar having a plurality of types; two actuating keys; and means controlled thereby for causing the type bar to print from one or another type thereon depending on the key actuated, said means comprising two supporting links for the type bar, one of which turns on a pivotal center that remains unaffected by the operation of both of said keys, means for individually shifting the pivotal center of the other link under the action of one key and for maintaining it quiescent under the action of the other of said keys, a train of driving connections separate and distinct from said links, and independently operable driving members actuated by said keys and each co-acting with said driving train.

29. In a type action for typewriting or like machines, the combination of a type bar having a plurality of types; two actuating keys; and means controlled thereby for causing the type bar to print from one or another type thereon depending on the key actuated, said means comprising two supporting links for the type bar, one of which turns on a pivotal center that remains unaffected by the operation of both of said keys, means for individually shifting the pivotal center of the other link under the action of one key and for maintaining it quiescent under the action of the other of said keys, a driving lever connected to the type bar through an independent train of connections, and means controlled by both of said keys for actuating said driving lever.

30. In a type action for typewriting or like machines, the combination of a type bar having a plurality of types; two actuating keys; and means controlled thereby for causing the type bar to print from one or another type thereon depending on the key actuated, said means comprising two supporting links for the type bar, one of which turns on a pivotal center that remains unaffected by the operation of both of said keys, means for individually shifting the pivotal center of the other link under the action of one key and for maintaining it quiescent under the action of the other of said keys, and motion governing means controlled by both of said keys and having a momentum accumulator, said governing means being arranged to decelerate the final printing movement of the type bar and to translate into pressure against the platen the kinetic energy of said accumulator.

31. In a type action for typewriting or like machines, the combination of a type bar having a plurality of types; two actuating keys; and means controlled thereby for causing the type bar to print from one or another type thereon depending on the key actuated, said means comprising two supporting links for the type bar, one of which turns on a pivotal center that remains unaffected by the operation of both of said keys, means for individually shifting the pivotal center of the other link under the action of one key and for maintaining it quiescent under the action of the other of said keys, a driving lever connected to the type bar through an independent train of connections, and independently operable driving levers one controlled by each of said keys and both operative on said first mentioned driving lever through an intermediate rolling tread.

32. In a type action for typewriting or like machines, the combination of a type bar having a plurality of types; two actuating keys; and means controlled thereby for causing the type bar to print from one or another type thereon depending on the key actuated, said means comprising two supporting links for the type bar, one of which turns on a pivotal center that remains unaffected by the operation of both of said keys, means for individually shifting the pivotal center of the other link under the action of one key and for maintaining it quiescent under the action of the other of said keys, a driving lever connected to the type bar through an independent train of connections, and independently operable driving levers one controlled by each of said keys and both operative on said first mentioned driving lever through an intermediate rolling tread, one of said independently operable driving levers being connected to the said means for shifting the pivotal center of one of the supporting links.

33. In a type action for typewriting or like machines, the combination of a type bar having a plurality of types; two actuating

keys; and means controlled thereby for causing the type bar to print from one or another type thereon depending on the key actuated, said means comprising two supporting links for the type bar one of which turns on a pivotal center that remains unaffected by the operation of both of said keys, and means for individually shifting the pivotal center of the other link under the action of one key and for maintaining it quiescent under the action of the other of said keys, said shifting means including toggle members broken from a normal substantially straight line position by the operation of one only of said keys.

34. In a type action for typewriting or like machines, the combination of a type bar having a plurality of types, two actuating keys; and means controlled thereby for causing the type bar to print from one or another type thereon depending on the key actuated, said means comprising two supporting links for the type bar, one of which turns on a pivotal center that remains unaffected by the operation of both of said keys, means for individually shifting the pivotal center of the other link under the action of one key and for maintaining it quiescent under the action of the other of said keys, said shifting means including toggle members broken from a normal substantially straight line position by the operation of one only of said keys, and stop means co-acting with one of said toggle members to limit its movement to and from normal position.

35. In a type action for typewriting or like machines, the combination of a type bar having a plurality of types; two actuating keys; and means controlled thereby for causing the type bar to print from one or another type thereon depending on the key actuated, said means comprising two supporting links for the type bar one of which turns on a pivotal center that remains unaffected by the operation of both of said keys, means for individually shifting the pivotal center of the other link under the action of one key and for maintaining it quiescent under the action of the other of said keys, said shifting means including toggle members broken from a normal substantially straight line position by the operation of one only of said keys, a driving lever connected to the type bar through an independent train of connections, independently operable driving levers one controlled by each of said keys, and a connection between one of said last mentioned levers and said toggle members for controlling the latter by the former.

36. In a type action for typewriting or like machines, the combination of a type bar having a plurality of types; two actuating keys; and means controlled thereby for causing the type bar to print from one or another type thereon depending on the key actuated, said means comprising two supporting links for the type bar one of which turns on a pivotal center that remains unaffected by the operation of both of said keys, means for individually shifting the pivotal center of the other link under the action of one key and for maintaining it quiescent under the action of the other of said keys, and two independently adjustable adjusting devices for adjusting the normal positions of the pivotal centers of both of said supporting links.

37. In a type action for typewriting or like machines, the combination of a type bar having a plurality of types; two actuating keys; and means controlled thereby for causing the type bar to print from one or another type thereon depending on the key actuated, said means comprising two supporting links for the type bar one of which turns on a pivotal center that remains unaffected by the operation of both of said keys, means for individually shifting the pivotal center of the other link under the action of one key and for maintaining it quiescent under the action of the other of said keys, and two adjusting devices for adjusting the normal position of said shiftable pivotal center of one of the supporting links in either of two directions at substantially right angles to each other.

38. In a type action for typewriting or like machines, the combination of a type bar having a plurality of types; two actuating keys; and means controlled thereby for causing the type bar to print from one or another type thereon depending on the key actuated, said means comprising two supporting links for the type bar, one of which turns on a pivotal center that remains unaffected by the operation of both of said keys, means for individually shifting the pivotal center of the other link under the action of one key and for maintaining it quiescent under the action of the other of said keys, two independently adjustable adjusting devices for adjusting the normal position of said shiftable pivotal center of one of the supporting links in either of two directions at substantially right angles to each other, and independent means for adjusting to different fixed positions the pivotal center of the other of said supporting links.

39. In a type action for typewriting or like machines, the combination of a type bar having a plurality of types; two actuating keys; and means controlled thereby for causing the type bar to print from one or another type thereon depending on the key actuated, said means comprising two supporting links for the type bar one of which turns on a pivotal center that remains unaffected by the operation of both of said keys,

means for individually shifting the pivotal center of the other link under the action of one key and for maintaining it quiescent under the action of the other of said keys, and means controlled by said last mentioned key for returning the shifted pivotal center to normal position.

40. In a type action for typewriting or like machines, the combination of a type bar having a plurality of types; two actuating keys; and means controlled thereby for causing the type bar to print from one or another type thereon depending on the key actuated, said means comprising two supporting links pivoted to the type bar at different points in the length thereof, the link furthest from the type on the type bar turning on a pivotal center that remains unaffected by the operation of both of said keys, and means for shifting the pivotal center of the link nearest the type carrying end of the type bar by the actuation of one of said keys and for maintaining it quiescent during the actuation of the other of said keys.

41. In a type action for typewriting or like machines, the combination of a type bar having a plurality of types; two actuating keys; and means controlled thereby for causing the type bar to print from one or another type thereon depending on the key actuated, said means comprising two supporting links for the type bar, a pivoted link supporting member on which one of said supporting links is pivoted, a rigidly secured arm on which the other of said supporting links is directly pivoted, driving connections separate and distinct from said supporting links for driving the type bar, means controlled by both of said keys for actuating said driving connections, and actuating connections between one only of said keys and said pivoted link-supporting member for moving it during the actuation of one only of said keys to displace the pivotal center of one only of said supporting links.

42. In a type action for typewriting or like machines, the combination of a type bar having a plurality of types; two actuating keys; and means controlled thereby for causing the type bar to print from one or another type thereon depending on the key actuated, said means comprising two supporting links for the type bar, a pivotal link supporting member on which one of said supporting links is pivoted, a rigidly secured arm on which the other of said supporting links is directly pivoted, actuating connections between one only of said keys and said pivoted link-supporting member for moving it during the actuation of one only of said keys to displace the pivotal center of one only of said supporting links, and driving connections controlled by both of said keys and including governing means having a momentum accumulator and arranged to decelerate the final printing movement of the type bar and to translate into pressure against the platen the kinetic energy stored in said accumulator.

43. In a typewriting or like machine, the combination of a machine frame; a plurality of type-action brackets supported thereby and individually adjustable thereon; and a plurality of type actions each comprising a type bar having a plurality of types, a supporting arm rigidly held on the companion bracket, means on said bracket for adjusting said arm to different fixed positions, a type bar supporting link pivotally supported directly on said arm and pivoted to the type bar, a controlling lever pivoted on said bracket, a second type bar supporting link pivoted to said controlling lever and to the type bar, two actuating keys for said type bar, actuating connections mounted on said companion bracket and controlled by both of said keys, and connections from one only of said keys to said controlling lever for shifting it to change the pivotal center of the said link supported thereon and thus change the normal path of movement of the type bar to print from one instead of another type thereon.

44. In a typewriting or like machine, the combination of a machine frame; a plurality of type-action brackets supported thereby and individually adjustable thereon; and a plurality of type actions each comprising a type bar having a plurality of types, a supporting arm rigidly held on the companion bracket, means on said bracket for adjusting said arm to different fixed positions, a type bar supporting link pivotally supported directly on said arm and pivoted to the type bar, a controlling lever pivoted on said bracket, a second type bar supporting link pivoted to said controlling lever and to the type bar, two actuating keys for said type bar, actuating connections mounted on said companion bracket and controlled by both of said keys, and toggle members supported on said companion bracket and connected to said controlling lever and normally maintained in substantially the straight line position to hold the controlling lever against accidental displacement during the actuation of one of said keys, and means controlled only by the other of said keys for breaking the toggle from its substantially straight line position to actuate the controlling lever and thereby change the pivotal center of the type bar supporting link pivoted thereon.

45. In a typewriting or like machine, the combination of a machine frame, a plurality of type-action brackets supported thereby and individually adjustable thereon; and a plurality of type actions each comprising a type bar having a plurality of types, a sup-

porting arm rigidly held on the companion bracket, means on said companion bracket for adjusting said arm to different fixed positions, a type bar supporting link pivotally supported directly on said arm and pivoted to the type bar, a controlling lever pivoted on said companion bracket, a second type bar supporting link pivoted to said controlling lever and to the type bar, two actuating keys for said type bar, connections from one only of said keys to said controlling lever for shifting it to change the pivotal center of the said link supported thereon and thus change the normal path of movement of the type bar to print from one instead of another type thereon, and type bar driving means mounted on said companion bracket and controlled by both of said keys, said driving means including governing means having a momentum accumulator and arranged to decelerate the final printing movement of the type bar and to translate into pressure against the platen the kinetic energy stored in said accumulator.

46. In a typewriting machine, the combination with a platen, of a type bar carrying a plurality of types, motion governing means articulated to said type bar and having a momentum accumulator arranged to decelerate the final printing movement of said type bar and to translate into pressure against the platen the kinetic energy of the accumulator, a plurality of keys for said type bar, means controlled thereby for determining from which of a plurality of types on the bar an imprint will be effected, a driving member for driving the type bar through said governing means, and driving connections from each of said keys to said driving member to actuate the type bar thereby.

47. In a typewriting machine, the combination with a platen, of a type bar mounted to execute both motion of translation and of rotation about a varying instantaneous center and carrying a plurality of types, motion governing means articulated to said type bar and having a momentum accumulator arranged to decelerate the final printing movement of said type bar and to translate into pressure against the platen the kinetic energy of the accumulator, a pair of keys having controlling connections to determine the path of movement of the type bar in accordance with the key actuated, and means for driving the type bar from both keys through said governing means.

48. In a typewriting machine, the combination with a platen, of a type bar having a plurality of type blocks each carrying a plurality of types, said type bar being pivotally mounted on a quaternal linkage having two axes of motion supported by the machine, motion governing means articulated to said type bar and having a momentum accumulator arranged to decelerate the final movement of said type bar and translate into pressure against the platen the kinetic energy of the accumulator, a pair of keys having linkage controlling connections to determine the path of movement of the type bar and thus print from one or another type thereon in accordance with the key actuated, means for driving the type bar from both keys through said governing means, and means for effecting a relative case shifting movement between said platen and type bars.

49. In a typewriting machine, the combination with a machine frame, a paper carriage, a platen carried thereby, a system of type actions comprising a plurality of independently detachable brackets secured to said frame and each having a type bar and a pair of links pivotally supporting the bar thereon, each action also having motion governing means pivotally connected between a fixed portion of the companion bracket and type bar, a plurality of keys for each action, means controlled thereby for selectively determining the path of movement of the associated type bar to print from one or another type thereon in accordance with the key actuated, a driving member for each action operated by both of the associated keys, and means included in each action for actuating the companion motion governing means from its driving member, whereby printing motion is transmitted through each governing means to the companion type bar by the actuation of either associated key.

50. In a typewriting machine, the combination with a machine frame having a front plate; a carriage; a platen carried thereby; and a system of type actions comprising a plurality of brackets adjustably secured to said front plate, each bracket carrying a type bar; of a pair of links pivotally supporting each type bar on its bracket; and motion governing means including a momentum accumulator articulated between each bar and its bracket; a pair of actuating keys for each action; means controlled thereby for selectively determining the path of movement of the associated type bar to print from one or another type thereon in accordance with the key actuated; a driving member for each action operated by both associated keys; and means included in each action for actuating the companion motion governing means from its driving member, whereby printing motion is transmitted through each governing means to the companion type bar by actuation of either associated key.

51. In a type action for typewriting or like machines, the combination of a type bar having a plurality of types thereon, means for supporting said type bar, and adjusting means coacting with said supporting means

to effect an adjustment thereof that will bring one type on the bar into proper alignment with the printing point without affecting the alignment with the printing point of one or more other types thereon.

52. In a type action for typewriting or like machines, the combination of a type bar having a plurality of types fixed thereon, a pair of pivotally supported members on which said type bar is pivoted, and means for effecting a relative adjustment between said pivoted supporting members in a manner that will align one type on the bar with the printing point without disturbing the alignment with the printing point of one or more additional types thereon.

53. In a type action for typewriting or like machines, the combination of a type bar having a plurality of types fixed thereon, a pair of pivoted supporting members on which said type bar is pivoted, means for effecting a relative shift between said supporting members to change the normal path of movement of the type bar, and means for effecting an adjustment of the pivotal support of one of said pivoted members in directions at substantially right angles to each other.

54. In a type action for typewriting or like machines, the combination of a type bar having a plurality of types fixed thereon, a pair of pivoted supporting members on which said type bar is pivoted, independent supports for said pivoted supporting members, and adjusting means associated with each support for independently adjusting it and the pivotal center of the supporting member supported thereby.

55. In a type action for typewriting or like machines, the combination of a type bar having a plurality of types fixed thereon, a pair of pivoted supporting members on which said type bar is pivoted, a lever on which one of said supporting members is pivoted, means for shifting said lever during the operation of the type bar to change the path of movement of said bar, and means for individually adjusting the fulcrum of said lever to different set positions in directions at substantially right angles to each other.

56. In a type action for typewriting or like machines, the combination of a type bar having a plurality of types thereon, a pair of supporting links therefor, a pivoted support on which one of said links is pivoted, a pair of keys for actuating said type bar to selectively print from one or another type thereon in accordance with the key actuated, means controlled by one of said keys for shifting said pivoted support to change the path of movement of the type bar, and means for individually adjusting to different set positions the pivotal center of said pivoted support whereby the pivotal support for one link may be adjusted independently of the other.

57. In a type action for typewriting or like machines, the combination of a type bar having a plurality of types thereon, a pair of supporting links therefor, a pivoted support on which one of said links is pivoted, a pair of keys for actuating said type bar to selectively print from one or another type thereon in accordance with the key actuated, means controlled by one of said keys for shifting said pivoted support to change the path of movement of the type bar, means for independently adjusting to different set positions the pivotal center of said pivoted support, and independent means for adjusting to different set positions the pivotal center of the other link, whereby the normal pivotal center of each of said supporting links may be independently adjusted to different normal positions.

58. In a type action for typewriting or like machines, the combination of a type bar having a plurality of types thereon, a pair of supporting links therefor, two actuating keys for the type bar, means for controlling the paths of movement of the type bar to selectively print from one or another type thereon depending on the key actuated, and adjusting means associated with parts of the type action for aligning the types with reference to the printing point including means by which one or more types may be aligned without affecting the alignment of one or more additional types on the bar.

59. In a type action for typewriting or like machines, the combination of a type bar having a plurality of types thereon, a pair of supporting links therefor, two actuating keys for the type bar, means for controlling the paths of movement of the type bar to selectively print from one or another type thereon depending on the key actuated, and adjusting means associated with parts of the type action for aligning types with reference to the printing point, including means by which the normal pivotal center of one of said links may be independently adjusted to different positions.

60. In a type action for typewriting or like machines, the combination of a type bar having a plurality of types thereon, a pair of supporting links therefor, two actuating keys for the type bar, means for controlling the paths of movement of the type bar to selectively print from one or another type thereon depending on the key actuated, and adjusting means associated with parts of the type action for aligning types with reference to the printing point, including means by which the normal pivotal center of one of said links may be independently adjusted in two directions at substantially right angles to each other.

61. In a type action for typewriting or

like machines, the combination of a type bar having a plurality of types thereon, a pair of supporting links therefor, two actuating keys for the type bar, means for controlling the paths of movement of the type bar to selectively print from one or another type thereon depending on the key actuated, and two sets of adjusting means associated with parts of the type action and each adjusted independently of the other for aligning the various types on the type bar with reference to the printing point, one of said sets of adjusting means being effective to align one or more types on the bar with reference to the printing point without affecting the alignment of one or more additional types on the bar.

62. In a type action for typewriting or like machines, the combination of a type bar having a plurality of types thereon; two actuating keys for the type bar; means for controlling the paths of movement of the type bar to selectively print from one or another type thereon depending on the key actuated, said means including a pair of links on which the type bar is supported, a pivoted member on which one of said links is pivotally supported, and connections between one of said keys and said pivoted member to shift the latter and change the path of movement of the type bar; and means for adjusting the pivotal center of said pivoted member substantially in the direction of a straight line passing through three points when the parts are in the actuated positions, namely, the pivotal center of the pivoted member, the point of connection of the companion link with the type bar, and the point of pivotal connection from a key to said pivoted member.

63. In a type action for typewriting or like machines, the combination of a type bar having a plurality of types thereon; two actuating keys for the type bar; means for controlling the paths of movement of the type bar to selectively print from one or another type thereon depending on the key actuated, said means including a pair of links on which the type bar is supported, a pivoted member on which one of said links is pivotally supported, and connections between one of said keys and said pivoted member to shift the latter and change the path of movement of the type bar; and means for adjusting the pivotal center of said pivoted member substantially in the direction of a straight line passing through three points when the parts are in the actuated positions, namely, the pivotal center of the pivoted member, the point of connection of the companion link with the type bar, and the point of pivotal connection from a key to said pivoted member, and also for adjusting said pivotal center in substantially a straight line perpendicular to the first mentioned line.

64. In a type action for typewriting or like machines, the combination of a type bar having a plurality of types thereon; two actuating keys for the type bar; means for controlling the paths of movement of the type bar to selectively print from one or another type thereon depending on the key actuated, said means including a pair of links on which the type bar is supported, a pivoted member on which one of said links is pivotally supported, connections between one of said keys and said pivoted member to shift the latter and change the path of movement of the type bar; and means for adjusting the pivotal center of said pivoted member substantially in the direction of a straight line perpendicular to a line passing through three points when the parts are in the actuated positions, namely, the pivotal center of the pivoted member, the point of connection of the companion link with the type bar, and the point of pivotal connection from a key to said pivoted member.

65. In a type action for typewriting or like machines, the combination of a type bar having two pairs of types thereon, a pair of supporting links therefor, two actuating keys for the type bar, means for controlling the paths of movement of the type bar to selectively print from one or another pair of types thereon depending on the key actuated, and adjusting means associated with parts of the type action for aligning the types with reference to the printing point including means by which one pair of types may be aligned without affecting the alignment of the other pair of types on the bar.

66. In a type action for typewriting or like machines, the combination of a platen, a type bar, and means co-operative therewith for controlling the final printing movement of the type bar after initial contact of a type thereon with the platen or the work sheet on the platen so as to effect a kneading action of the type against the work sheet on the platen.

67. In a type action for typewriting or like machines, the combination of a platen, a type bar, means for guiding the type bar in a curved path to the printing point, and a toggle for positively moving the type bar in its final printing movement to effect a pressure imprint, said parts being combined to give a kneading action of a type on the type bar against the platen in making an impression on the work sheet and after initial contact therewith.

68. In a type action for typewriting or like machines, the combination of a platen, a type bar having a plurality of types thereon, two printing keys for said type bar,

path controlling means for causing the type bar to move in one curved path or another to the printing point, to print from one or another type on the bar depending on which of said keys is actuated and to guide the type bar so as to give a kneading action to the effective type against the work sheet on the platen, and type bar actuating means controlled by said keys.

69. In a type action for typewriting or like machines, the combination of a platen, a type bar having a plurality of types thereon, two printing keys for said type bar, path controlling means for causing the type bar to move in one curved path or another to the printing point to print from one or another type on the bar depending on which of said keys is actuated, and motion governing means controlled by said keys having a momentum accumulator arranged to decelerate the final printing movement of the type bar and to translate into pressure against the platen the kinetic energy of said accumulator, said path controlling means controlling the path of the type bar so that said pressure is exerted with a slight rolling motion to give the type a kneading action against the work sheet on the platen.

70. In a type action for typewriting or like machines, the combination of a platen, a type bar, key actuated means for pressing the type bar in substantially a noiseless manner against the platen, and means for guiding the type bar so as to effect a slight rolling or kneading motion of the type against the work sheet while the type is being substantially noiselessly pressed against the platen.

71. In a type action for typewriting or like machines, the combination of a platen, a type bar, a pair of direction controlling links on which said type bar is supported and by which it is guided in a curved path to the printing point, and driving means acting in conjunction with said links to cause the type impression to be made under a positive pressure by a kneading action against the work sheet after initial contact therewith.

72. In a type action for typewriting or like machines, the combination of a platen, a type bar, and means coacting with the type bar for moving and so controlling the direction of motion of the type bar at each printing operation as to impress with positively applied pressure first only one portion of a type face against a work sheet on the platen and thereafter to cause other points on the type face to be successively impressed on said paper with positively applied pressure.

73. In a typewriting machine, and in a type action, the combination of a type bar, a driving mechanism for moving the type bar to effect a positively applied pressure imprint, and a linkage for guiding said type bar; the members of said linkage being so related, proportioned and arranged and so connected with the type bar as that when the type initially reaches the paper the plane of its face is at an angle to the paper at the printing point whereby only an extreme portion of the type face first contacts with the paper, and will thereafter by reason of such linkage have a rocking or rolling motion over the paper during the final positively applied printing movement of the type bar under the force of the driving mechanism.

Signed at Middletown, in the county of Middlesex and State of Connecticut, this 15th day of January, A. D. 1925.

GEORGE G. GOING.

555

Feb. 23, 1926. 1,574,285

G. G. GOING

TYPEWRITING MACHINE

Original Filed Feb. 9, 1925 4 Sheets-Sheet 4

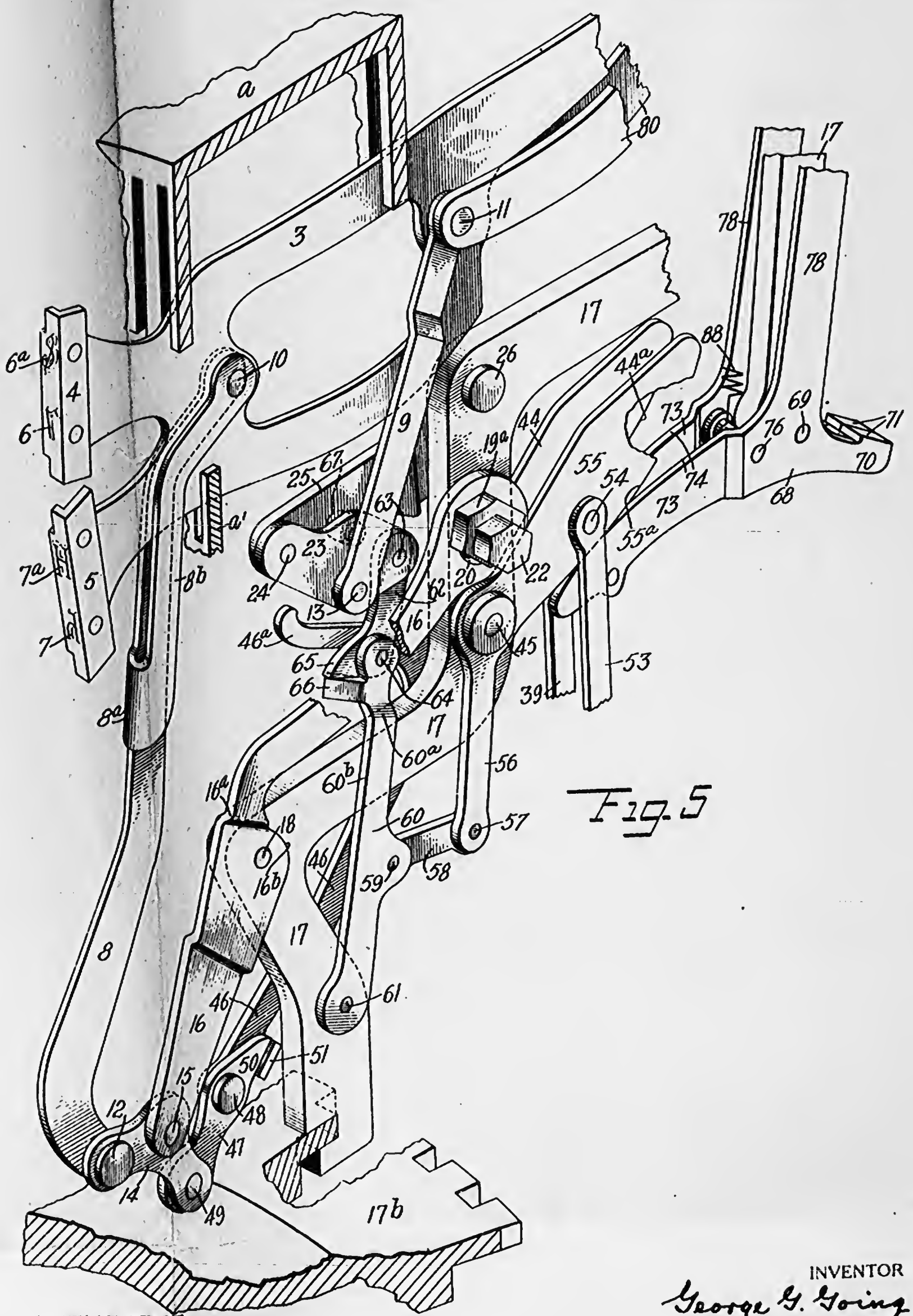

Fig. 5

WITNESSES

Lillian Nelson

Charles E. Smith

INVENTOR

George G. Going

BY Jacob Felbel

ATTORNEY

556

Feb. 23, 1926. 1,574,285

G. G. GOING

TYPEWRITING MACHINE

Original Filed Feb. 9, 1925 4 Sheets-Sheet 3

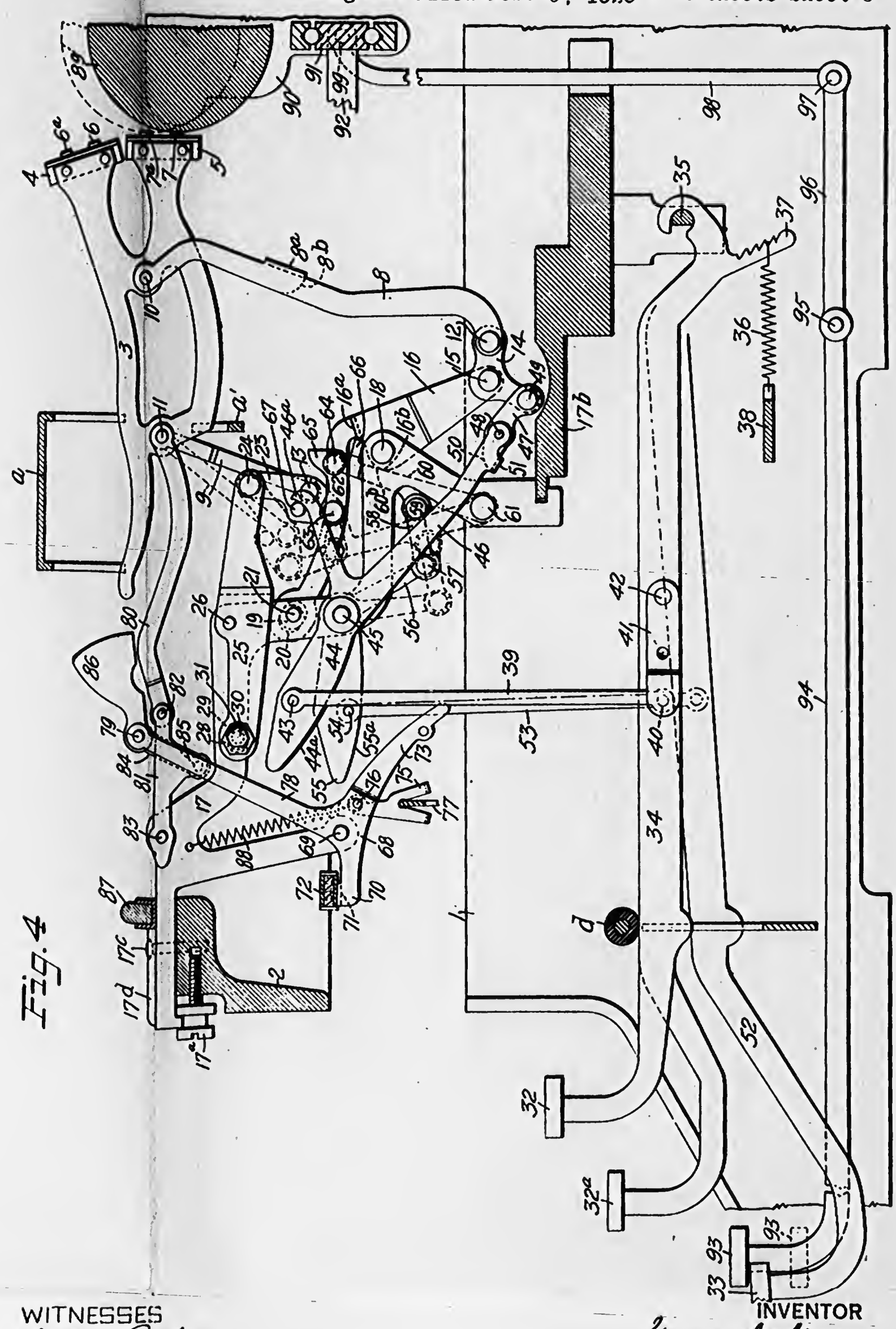

Fig. 4

WITNESSES

Lillian Falson.

Charles E. Smith

INVENTOR

George G. Going

BY Jacob Foltel

ATTORNEY

557

Feb. 23, 1926. 1,574,285

G. G. GOING

TYPEWRITING MACHINE

Original Filed Feb. 9, 1925 4 Sheets-Sheet 2

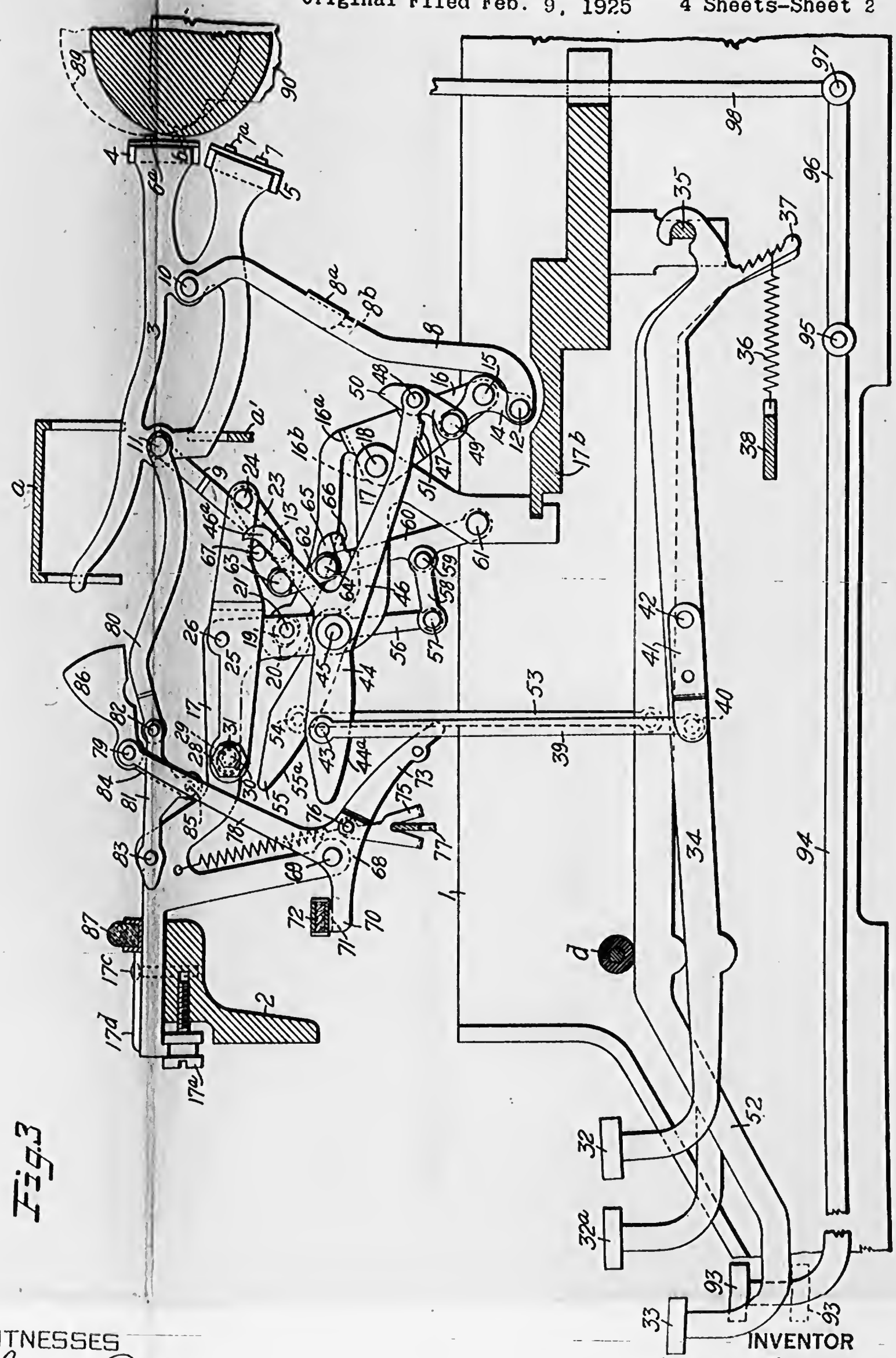

Fig. 3

WITNESSES

Lillian Nelson

Charles E. Smith

INVENTOR

George G. Going

BY

Jacob Felbel

ATTORNEY

558

Feb. 23, 1926. 1,574,285

G. G. GOING

TYPEWRITING MACHINE

Original Filed Feb. 9, 1925 4 Sheets-Sheet 1

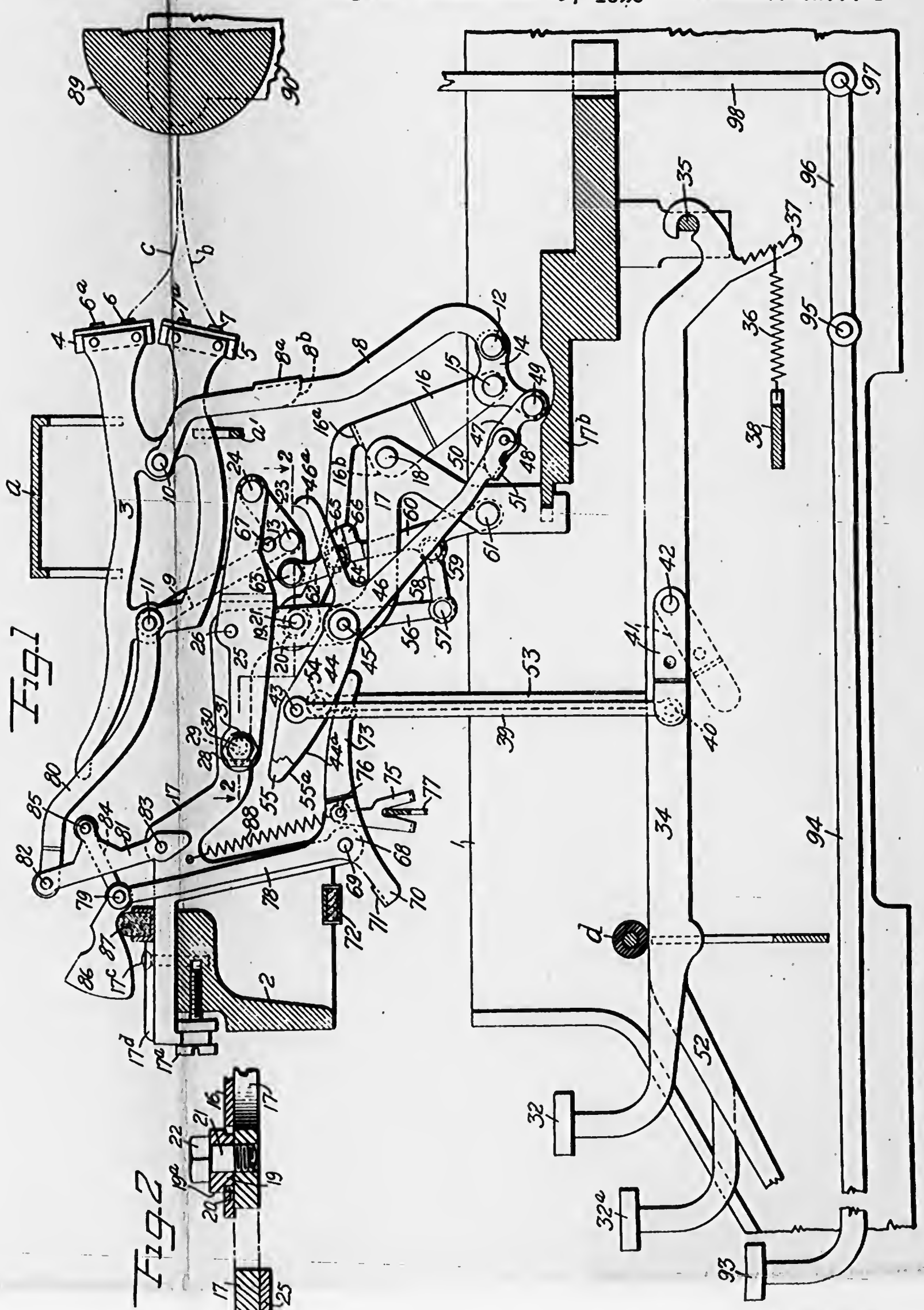

WITNESSES

Lillian Nelson

Charles E. Smith

INVENTOR

George G. Going

BY

Jacob Felbel

ATTORNEY

Patented Feb. 23, 1926. 1,574,285

UNITED STATES PATENT OFFICE.

GEORGE G. GOING, OF MIDDLETOWN, CONNECTICUT, ASSIGNOR TO REMINGTON-NOISELESS TYPEWRITER CORPORATION, OF NEW YORK, N. Y., A CORPORATION OF NEW YORK.

TYPEWRITING MACHINE.

Application filed February 9, 1925, Serial No. 7,941. Renewed November 25, 1925.

To all whom it may concern:

Be it known that I, GEORGE G. GOING, citizen of the United States, and resident of Middletown, in the county of Middlesex and State of Connecticut, have invented certain new and useful Improvements in Typewriting Machines, of which the following is a specification.

My invention relates to typewriting or like machines and particularly to type actions therefor.

The main object of the invention, generally stated, is to provide an improved construction and arrangement of parts whereby the elements of each type action are functionally and structurally coordinated to facilitate printing in an improved manner

More specifically stated, one of the objects of the invention is to provide improved and highly efficient type actions for printing without producing the noise that ordinarily results from the operation of the type actions.

A still further object of the invention is to provide an improved and highly efficient construction of the character specified in which the type actions are controlled from the standard four-bank keyboard with a single case shift.

To the above and other ends which will hereinafter appear, my invention consists in the features of construction, arrangements of parts and combinations of devices set forth in the following description and particularly pointed out in the appended claims.

In the accompanying drawings wherein like reference characters indicate corresponding parts in the different views,

Figure 1 is a fragmentary vertical fore-and-aft central sectional view showing a sufficient number of parts of a typewriting machine to illustrate my invention in its embodiment therein, some of the parts being more or less conventionally represented.

Figure 2 is an enlarged detail sectional view of the adjusting devices and associated parts, the section being taken on the line 2—2 of Fig. 1 and looking in the direction of the arrows at said line.

Figure 3 is a view corresponding to Fig. 1 except that the type bar represented is shown moved to the printing point under control of one of the two keys by which it is actuated.

Figure 4 is a like view of the same except that the type bar is shown moved to printing position under the control of its other actuating key.

Figure 5 is an enlarged detail fragmentary perspective view of one of the type actions and some of the associated parts, portions of the type action being omitted.

The present invention relates to a form of construction having certain of the same general characteristics and purposes in view as the constructions disclosed in my copending applications, Serial Nos. 665,290 and 3,365, filed respectively, Sept. 28, 1923 and Jan. 19, 1925. Both of said co-pending applications contain claims directed to features disclosed therein, claims of the present application being restricted to features not disclosed in either of the other of said co-pending applications.

As in the constructions disclosed in my co-pending applications, I provide in the present instance a machine having a standard keyboard of four banks of keys, each type bar carrying four types and being operated by either one of two keys. Each pair of keys actuates a single front strike type bar in a substantially noiseless manner to normally selectively print from one or another lower case type on the type bar, depending on which of two keys is actuated, or to selectively print from one or another upper case type on the same type bar after a relative case shift has been effected between the platen and type bars. In the present embodiment of my invention the frame of the machine may be said to include a base 1 and so-called front plate or member 2 on which various working parts of the machine, including the type actions, are supported. It will be understood that the type bars are arranged in a substantially horizontally disposed arc in front of and around the printing point as a center, so that each type bar moves but a short distance in a radial plane to the common printing center, as in the constructions disclosed in my said co-pending applications. The controlling means for each type bar, with the possible exception in some instances of the key levers therefor, move in the same plane as the plane of move-

ment of the associated type bar, or as close to and parallel with such plane as the assembled parts will permit.

With the foregoing general statement I will proceed to describe a single type action, it being understood that all actions are alike, or substantially so, except that they are mounted in different planes that radiate from the printing center. The description of one type action applies to the others.

Each type action comprises a flat substantially horizontally disposed type bar or type carrying member 3 provided with a plurality of type heads or blocks 4 and 5 fixed thereto. The type head 4 has a lower case type 6 and an upper case type 6ª, whereas the type head 5 has a lower case type 7 for printing a different character and an upper case type 7ª, the printing faces of the types on the two blocks being arranged in converging planes. Each type bar is guided against sidewise displacement in its printing movement by two oppositely disposed arc-shaped guides or guide combs *a* and *a'* having radial slots in which the type bars move. Each type bar is supported by a pair of links 8 and 9 pivoted respectively at 10 and 11 to the type bar at different points in the length thereof. The links 8 and 9 are mounted to swing respectively on pivot pins 12 and 13 in the movement of the type bar from normal to printing position.

In the present construction the link 8 has a lateral bend 8ª at its rear edge which supports an upwardly extending parallel arm 8ᵇ that corresponds substantially to the contour of the upper end portion of the body of the link. The type bar is received between the parallel arms of the link 8 thus formed, and is pivotally connected to both of them by the pivot pin 10. In the present construction, as in the construction disclosed in my co-pending application, Sr. No. 3,365 the pivotal support 12 for each link 8 is adapted to be shifted when one of the two keys which control the type action is actuated. But unlike the construction disclosed in said last mentioned co-pending application the pivotal support 13 of the other link 9 also is adapted to be independently shifted when the other key which controls the type bar is actuated, all as will hereinafter appear. As in my prior application, Sr. No. 3,365, the pivot pin 12 is mounted on a controlling member 14 which in the present instance is in the nature of a ball crank lever pivoted at 15 on a headed pivot pin secured to a normally stationary supporting member or arm 16. This supporting arm is adjustably secured on one side of a type action bracket or hanger 17 by which all associated parts of the type action, except the key levers, are mounted or supported.

From certain aspects of my invention any suitable means may be provided for effecting an adjustment of the arm 16 to different set positions on the hanger 17. The same is also true of other adjusting means to be hereinafter described. The adjusting means for the arm 16 shown in the present instance are of the following construction: The member 16 is pivoted at 18 on one side of the hanger. An eccentric 19 is received in an elongated opening 20 in the member 16. This eccentric has an angular or hexagonal head 19ª by which it may be turned to different adjusted positions around a screw 21, received at its threaded end in a tapped opening in the hanger 17 and provided with an angular or hexagonal head 22. By tightening the screw 21 it will clamp and hold the eccentric 19 firmly in the position to which it has been rotatively adjusted and thus hold the member 16 in the position to which it has been adjusted around its pivot 18 by the eccentric. This adjustment effects a corresponding adjustment of the pivot or fulcrum 15 of the supporting lever 14 around the center 18.

The pivot 13 of the link 9 also has means for adjusting it. Thus the pivot 13 is supported by a supporting member or lever 23 pivoted or fulcrumed at 24 to a normally stationary supporting arm or member 25. This member 25 is pivoted at 26 on the opposite side of the hanger 17 from that on which the member 16 is supported, and has means similar to those previously described for adjusting the member 25 to different set positions on the hanger. Thus, an eccentric 27 having an angular or hexagonal head 28 is mounted on a screw 29 threaded into a tapped opening in the hanger 17, said screw having an angular or hexagonal head 30. Said eccentric 27 is received in a substantially horizontally disposed slot 31 in the member 25 and coacts with said member to adjust it to different positions around the pivot 26. This adjustment effects an up and down adjustment of the pivot 24 and of the corresponding end of the supporting lever 23, thereby elevating or lowering the pivot 13. When the proper adjustment of the member 25 has been obtained it is held firmly in such position by tightening the screw 29.

It will be understood that the hexagonal heads 19ª and 28 on the eccentrics 19 and 27 respectively are of suitable formation and conveniently located for co-operation with a suitable tool or wrench by which the eccentrics may be individually adjusted, and that each eccentric is held friction tight in its adjusted position between the head of its supporting screw and a side face of the hanger 17.

These adjusting means for the links 8 and 9 aid in effecting a proper alignment of the type bar to bring the types thereon into alignment with the printing point.

Each type bar 3 is operated selectively

by two keys, one of which automatically brings the upper and the other the lower pair of types on the bar to printing position. For lack of room in Figs. 1, 3 and 4 only three keys of the four different banks are shown. In practice I prefer, as in my prior applications, to have the keys of each type action on adjacent key levers but arranged in alternate banks in the keyboard. Thus the key 32 of the type action shown is in the fourth bank, whereas the other key 33 of said type action is in the second bank. Another type action would have one of its keys 32ª in the third bank and the other key of said type action (not shown) in the first bank. In moving a type bar to printing position under the actuation of the key 32 the type 7 will follow a curved path indicated substantially by the dotted line *b* if the parts have been properly adjusted. On the other hand, when the type bar is moved under the actuation of the key 33 the type 6 will follow a curved path of the general character indicated by the dotted line *c*. These curves are more nearly uniform, although they are oppositely disposed, than in my prior application, Sr. No. 665,290, and it will be observed that they converge in front of the printing point and move in substantially a straight line coincident with the printing point at the last part of the printing stroke, and in this respect are unlike the construction of my application, Sr. No. 3,365. The means by which the paths of movement of a type bar are controlled include in part features which have been described including the bell crank lever 14 by which the pivotal center 12 of the supporting link 8 may be shifted back and forth from the Fig. 1 to the Fig. 3 position.

I will now describe in detail how each type bar is controlled from its two printing keys: It may be remarked at this point that the means by which the link 8 is shifted from the Fig. 1 to the Fig. 3 position are somewhat like the corresponding parts disclosed in my said prior application, Sr. No. 3,365. The key 32 is carried by a key lever 34 fulcrumed at 35 in the base of the machine and provided with an individual returning spring 36. This spring is adjustably connected at one end to a depending arm 37 on said key lever, and is connected at its other end with a bar 38 that extends beneath all of the key levers and is adjustably mounted by suitable means in the base of the machine. The key lever 34 is detachably connected to a link 39 by a pivot 40 carried by said key lever and received in an opening in the lower end of said link. A side-bearing spring plate or clip 41 is pivoted at 42 to the companion key lever and bears laterally at its free end against the link 39. This clip holds the link connected to the lever when the clip is in the effective full line position, and enables the link to be detached from the lever when the clip is in the dotted line position shown in Fig. 1. The upper end of the link 39 is pivoted at 43 to an actuating member, sublever or lever arm 44 pivoted at 45 on the right-hand side of the bracket 17. This lever is extended rearwardly beyond its pivot to form a second lever arm 46 which constitutes one member of a controlling toggle. The other member of this toggle is a link 47 pivoted at 48 to the member 46 and at its lower end, as at 49, to one arm of the bell crank link-supporting lever 14. The member 46 carries an upwardly and rearwardly extending arm 46ª the purpose of which will be hereinafter described.

In order to prevent the toggle members 46, 47 from moving in one direction beyond the substantially straight line position shown in Fig. 1, I provide a connection between said members which is in the nature of a knuckle joint. Thus, the member 47 is extended forward beyond the pivot 48 to form an arm or stop 50 that is adapted to bear against a laterally extending lug or stop 51 that projects to the left from the lower edge of the companion toggle member 46. The arm 50 and lug 51 act as stops to prevent a downward break of the toggle beyond the substantially straight line, Fig. 1, position in the return movement of the toggle to normal position. The effect of maintaining the toggle in the substantially straight line position is to hold the pivot 12 quiescent in the position shown in Figs. 1 and 4 when the type bar is moved to printing position by the actuation of the key 33, as will hereinafter more clearly appear. However, the depression of the key 32 results in moving the member 46 to the position shown in Fig. 3 where the member 46 and the parts connected therewith, including the key 32, will be limited as will presently appear. This depression of the key 32 results in breaking the toggle from the substantially straight line holding position shown in Fig. 1, to the operated position indicated in Fig. 3, thereby lowering and moving forward the pivotal center 12 of the type bar supporting link 8 to change the path of movement of the type bar as it is being moved to printing position by other devices to be hereinafter described. The proper positioning of the pivot 12 in the Fig. 3 position and the holding of it in such position by the toggle is effected before the final printing movement of the type bar takes place. During the operation of the type bar by the key 32 as just described the pivotal support 13 of the link 9 remains quiescent, as will be seen from an inspection of Fig. 3.

The other printing key 33 of the type

action shown is carried by a key lever 52 constructed, pivoted and individually spring returned like the key lever 34 previously described. The key lever 52 is connected by a link 53 in the same manner that the link 39 is connected to its key lever 34, and has its upper end pivoted at 54 to an actuating member, lever arm or sublever 55. Said sublever is arranged at the opposite side of the hanger 17 from the lever 44 and is mounted on an extension of the pivot 45. The lever arms 44 and 55 forward of the pivot 45 are parallel with each other and are of like construction except that the arm 55 is provided with a depending lever arm 56. This arm 56 is pivoted at 57 to a link 58 which has its rear end pivoted at 59 to a lever 60. The lever or member 60 is pivoted at 61 on the left-hand side of the hanger 17 and extends upwardly and is received between the hanger 17 and the forward arm of the member 16, the latter being bent slightly at 16ᵃ (see Fig. 5) to provide a lateral offsetting of the forwardly projecting arm thereof, whereas the upper end of the lever 60 is also bent at 60ᵃ to provide a slight off-setting of the upper end of said lever. The lever 60 constitutes one member of a controlling toggle, the other member of which is in the nature of a link 62 pivoted at its upper end, as at 63, to the forward end of the link supporting member or lever 23. The toggle members 60 and 62 are pivotally united at 64 by a knuckle joint which includes a lateral projection or stop 65 of the member 62 which coacts with the corresponding stop or projection 66 on the toggle member 60. This last mentioned stop is bent sidewise to bring it into the path of movement of the stop 65. These stops coact to limit the motion of the associated toggle members in their return movement and prevent them from breaking beyond the normal substantially straight line position shown in Fig. 1. As long as the toggle members in question maintain this position the pivotal center 13 of the link 9 will be held against movement, and as previously pointed out it is thus held quiescent during the operation of the type bar by the key 32, as indicated in Fig. 3. In order to effect an accurate arrest of the member 23 in its return movement to the normal Fig. 3 position, I provide a laterally projecting stop pin 67 on said member 23, which pin underlies the arm 25 and coacts with the lower edge thereof when the toggle 60, 62 is moved to the substantially straight line position. The pin 67 also coacts with the arm 46ᵃ to bring about a restoration of both toggles 46, 47 and 60, 62 to their normal straight line positions as will presently appear.

In the operation of the type bar by the key 33 motion is transmitted from the sublever 55 through the members 56 and 58 to break the toggle 60, 62, thereby lowering the link supporting lever 23 around its pivot 24. The result of this is to lower and move rearward the supporting pivot 13 of link 9, the parts of the linkage moving from the dotted to the full line positions in Fig. 4. This movement is arrested by an edge 60ᵇ of the toggle member 60 coacting in the nature of a stop with the stop surface 16ᵇ of the bracket 16, as indicated in dotted lines in Fig. 4. From an inspection of this figure it will be seen that the stops 60ᵇ and 16ᵇ not only arrest and limit the breaking of the toggle 60, 62, but also limit the depression of the associated sublever 55 and the key 33 which controls it. During this depression of the key 33 to break the toggle 60, 62 and shift the pivot 13 of the link 9 as described, the toggles 46, 47 will remain quiescent in a straight line holding position, thus holding the pivot 12 of the link 8 against movement. The type bar will therefore follow a path indicated by the line *b* in Fig. 1 to write from the corresponding lower case type 7 if the platen be in the lower case position, or from the appropriate upper case type 7ᵃ if the platen be in the upper case position.

It will be understood that after the breaking of either of the toggles 46, 47 or 60, 62 by an actuation of the associated key 32 or 33, it is intended that a release of the depressed key will enable the associated returning spring 36 to return the depressed key lever and return the broken toggle to its substantially straight line normal position, shown in Fig. 1. However, it may happen at times that either one of these toggles has not completely returned to its normal position before an actuation of the type bar by the other key takes place. The construction hereinbefore described provides positively acting means for automatically rectifying the position of or insuring the complete return of both toggles 46, 47 and 60, 62. This insures maintaining an accurate positioning of the pivotal center 12 during the actuation of the type bar by its key 33, as shown in Fig. 4. It also provides for maintaining an accurate positioning of the pivotal center 13 during an actuation of the type bar by its key 32, as shown in Fig. 3. These results are obtained in the following manner:—From an inspection of Fig. 4 it will be seen that during the breaking of the toggle 60, 62 from the dotted to the full line position the pin 67 traverses a path which brings it into contact with the arm 46ᵃ. If the toggle 46, 47 has not been fully returned after the preceding operation of the type bar by the key 32, then the arm 46ᵃ would extend into the path of the pin 67 and as the latter moves down to the full line position in Fig. 4 under the actuation

of the key 33, the member 46—46[a] will be forced to the limit of its return movement, or until the stops 50 and 51 coa t, as indicated in Fig. 4. This occurs before the type bar reaches the printing position and insures a proper positioning of the pivotal center 12, and insures that a proper imprint of the type at the printing point will result.

Should the toggle members 60, 62 fail to be fully returned to substantially straight line position after an actuation of the type bar by its key 33, then the positions of such toggle members will be automatically rectified by the next actuation of the type bar by its key 32. Thus, at such actuation, the arm 46[a] is moved upwardly and forwardly and coacting with the pin 67 in the path thereof will fully return the toggle members 60, 62 to normal straight line position, or until the stops 65 and 66 of the associated knuckle joint arrests such members and the pin 67 is brought to rest against the supporting arm 25. This occurs before the type bar reaches the printing position under the actuation of the key 32, and insures a proper positioning of the pivotal center 13 of the link 9, and insures a proper imprint of the type at the printing point.

It has been explained that a separate supporting bracket or hanger 17 is provided for each type action. As in the construction disclosed in my prior application, Sr. No. 3,365, these brackets are radially supported around a printing point, means being provided whereby each bracket together with the parts of the type action carried thereby may be individually introduced into and removed from the machine as a separate unit, and may be individually adjusted radially toward and from the printing point. The construction that enables these results to be obtained is the same as in my prior application, Sr. No. 3,365 and briefly stated is as follows:

The forward horizontally disposed portion of each bracket 17 is received in a radially disposed slot in the top of the front plate or member 2 of the machine frame. A depending projection on the forward end of each bracket is received in a circumferential groove in a screw 17[a] threaded into a tapped opening in the member 2. A rear depending end of each bracket is slotted (see Fig. 5) to receive the web formed at the forward transversely slotted edge portion of a supporting member 17[b] secured to the base of the machine. The forward edge of the member 17[b] is segmental in form, corresponding to the arrangement of the set of hangers or brackets 17 at the lower ends thereof, and has interdental openings therein, each corresponding in width to the thickness of the associated bracket 17. This construction provides a firm interlocking support between each bracket and the member 17[b] which holds the bracket against movement in every direction except that of its radial adjustment effected by the companion screw 17[a]. A screw 17[c] coacting with a clamping plate 17[d] holds the companion hanger firmly in its adjusted position and enables the bracket with the parts carried thereby to be readily detached as a separate unit when desired.

Thus far I have described the means by which each type bar is individually guided or controlled in its movement to travel in one curved path or another to a common point in front of the printing center, and to move from thence in a straight line to the printing position to cause one or another type thereon to print in accordance with the key 32 or 33 which is actuated. But I have not described the driving means by which each type bar is moved to printing position.

In the present construction I employ a single train of driving means or connections for each type bar including motion governing means having a momentum accumulator, said governing means being arranged to decelerate the final printing movement of the type bar and to translate into pressure against the platen the kinetic energy of the accumulator. It is due to such means combined with the parts previously described that an imprint may be effected in substantially a noiseless manner. In the present construction, as in the construction of my prior application, Sr. No. 3,365, operating motion is transmitted to each type bar from both of its printing keys through the above mentioned single train of driving means to actuate each type bar with a substantially uniform touch from both its keys and provide a uniform, or substantially uniform, touch on the keys throughout the system, as will now be more clearly described.

It has been explained that the independently operating lever arms 44 and 55 of each type action forward of their common pivot 45 are of uniform character and are mounted to move in parallel planes. A main driving lever 68 is provided for each type action, this lever being pivoted at 69 to the associated hanger 17 and actuated by both of the associated lever arms 44 and 55. The construction and operation of the lever 68 and the parts controlled thereby are like those shown in my prior application, Sr. No. 3,365. Referring to Fig. 5, it will be understood that as shown, I construct each of the levers 68 from two correspondingly shaped members spaced apart and held together in spaced relation by suitable means. As best shown in Fig. 5 each member of the lever 68 is provided with a forwardly extending arm 70 having an inwardly bent lug 71, said lugs having an edge to edge bearing, one against the other. These lugs constitute a contact that is adapted at the limit of the operat-

ing movement of the lever 68 to bear against a suitable cushion stop structure 72 on the frame of the machine. Rearwardly extending parallel arms 73 on the driving lever 68 each preferably has a curved contact or rolling tread 74. A curved or rolling tread 55ᵃ on the overlying lever 55 coacts with one of the treads 74, whereas the corresponding rolling tread 44ᵃ on the overlying lever 44 coacts with the other tread 74 on the driving lever. A depending link 75 is pivoted on a rivet 76 of each driving lever 68 and is forked at its lower end to coact with a segmental universal bar 77 which controls the escapement (not shown) for the carriage. The driving lever 68 also has an upright double arm 78 comprising two corresponding parts which straddle the associate bracket 17 and are united at their upper ends by a pivot 79. This double arm 78 is connected to the associate type bar 3 through mechanical devices which, together with the main driving lever 68, constitute what has been hereinbefore referred to as a single train of driving connections including momentum governor means having a momentum accumulator. Such means are effective to transmit a forward thrust to the type bar in a uniform manner whether actuated by one or the other associated keys 32 and 33. This train of connections includes an actuating toggle comprising a double toggle link 80 made up of two correspondingly shaped members connected together but maintained spaced apart. The forward end portions of the members of this double link 80 extend on opposite sides of the type bar and are connected thereto by the pivot 11 which also connects the supporting link 9 to the type bar. A second double toggle member 81 is made up of two correspondingly shaped united parts which are maintained spaced apart. This double member is pivoted at 82 to the forward end of the link 80 and extends on opposite sides of the companion bracket 17 and is supported to turn on a fixed pivot 83 carried by said bracket. A single link or lever arm 84 is connected at one end by the pivot 79 to the upright double arm 78 of the main driving lever. The link 84 extends between the two members which constitute the toggle member 81 and is pivoted thereto at one end, as at 85, and it moves the toggle 80, 81 to the substantially straight line position represented in Figs. 3 and 4 to apply printing pressure along the straight line of the toggle. Rigidly attached to the link or lever arm 84 is a comparatively heavy weighted member 86 which normally rests on a segmental supporting pad 87 and serves as a momentum accumulator for the actuating toggle 80, 81 when the latter is actuated by the main driving lever 68. After the depression of an associated printing key has been arrested, the momentum of the accumulator 86 will continue its movement to impart its kinetic energy to the toggle in order to complete the movement of the toggle members to the substantially straight line position, thereby completing the printing stroke of the type bar. It will be seen, therefore, that this momentum accumulator 86 is adapted to supply the final energy necessary to straighten the toggle 80, 81 when the type bar has substantially reached the printing position. A contractile spring 88 is connected at one end to the bracket 17 and at the other end to the rivet 76 on the driving lever 68, and serves to return the lever 68 and the parts connected therewith to the normal Fig. 1 position after each actuation, the key lever being independently arrested in its return movement by a padded stop *d*. In arrangement and principle of operation the toggle mechanism just described is substantially the same as has been used heretofore in the Noiseless typewriter, but some detail changes have been made to adapt it to the present machine. In Fig. 3 the key 32 is shown in its extreme depressed position and the type 6 is pressed against the platen. In Fig. 4 the type 7 is pressed against the platen and the corresponding or extreme depressed position of the key 33 is shown. In both figures the last part of the stroke of the type bar was effected by the momentum of the weight 86 which has moved the associated arm 73 somewhat out of contact with the arm 44 or 55 with which it coacted. In Fig. 4 therefore the pin 67 had completed its stroke and assured the proper positioning of the lever 14 and pivot 12 before the type 7 reached the platen. In Fig. 3 the arm 46ᵃ had completed its stroke and thus brought the pivot 13 completely to its normal position before the type 6 reached the platen.

The platen carriage and case shift mechanism are more or less conventionally represented. As shown in the present example the platen 89 is carried by a suitable carriage 90, supported through intervening ball bearings (Fig. 4) on a case shift rail 91, to travel from side to side of the machine. The case shift rail is guided by links 92 and is mounted to receive, together with the carriage and platen, a single upwardly directed case shift movement from the normal position, represented in full lines, to the upper case position. The platen is shown in the last mentioned position in dotted lines in Figs. 3 and 4. Any suitable means may be employed for this purpose. The conventional representation shown in the present instance includes a case shift key 93 and a lever arm 94 carried by a rock shaft 95. The latter has two rearwardly extending arms 96 each pivoted at 97 to a link 98 which in turn is connected at its upper end 99 to the case shift rail 91. In

Fig. 3 I have shown a lower case type 6 on the type head or block 4 at the printing point under the actuation of the key 32, whereas in Fig. 4 I have shown a lower case type 7 on the type head or block 5 at the printing point under the actuation of the key 33. When the platen 89 is shifted to the upper case position then one of the upper case types 6ª or 7ª will be selectively moved to the printing point depending on which of the two associated keys 32 or 33 is actuated.

In order to actuate the type bar 3 and bring it to the printing position shown in Fig. 3, the key 32 is depressed. This transmits a pull through the link 39 to operate the sublever 44. The rolling tread on this lever coacting with the companion rolling tread on the double arm 73 of the driving lever 68 gives a variable acceleration to the motion of the latter, and also provides a lost motion connection between the levers 44 and 68. This lost motion is brought about when a motion of the lever 44, and the key 32 by which it is actuated, are brought to rest at the end of their stroke, as shown in Fig. 3. At this time the driving lever 68 and the parts connected therewith, including the type bar, are permitted to continue their operation independently of the lever 44 and under their own momentum to effect an imprint without the impetus of the actuated key 32 and the parts connected therewith at the final portion of the printing stroke. The motion thus transmitted to the type bar is in the nature of a thrust exerted through the toggle members 80 and 81, pushing the type bar to the printing point and by the final expenditure of energy applying a powerful printing pressure. The printing operation of the type bar by an actuation of the key 32 is accompanied by a displacement of the pivotal center 12 of the supporting link 8, as shown in Fig. 3. This is accomplished by breaking the toggle 46, 47 from its substantially straight line position shown in Fig. 1 to the position represented in Fig. 3, due to the actuation of the lever arm 44 with which the toggle has direct mechanical connection. This results in turning the lever 14 on its pivot 15 from the Fig. 1 to the Fig. 3 position as hereinbefore explained, thereby changing the position of the pivotal center 12 of the supporting link 8 and causing the type bar to travel through a different curved path from that which it follows when actuated by the key 33, as indicated by a comparison of the dotted lines *b*, *c*, in Fig. 1.

An actuation of the type bar by the key 33 produces a like movement of the single train of connections from the driving lever 68 to the type bar. In this instance however the toggle 46, 47 remains at rest in the substantially straight line position as indicated in Fig. 4, thereby holding the pivot 12 fixed against movement while the link 8 turns thereon. The actuation of the key 33, however, also resulted in breaking the toggle 60, 62 from the dotted to the full line position in Fig. 4. The effect of this was to move the pivotal center 13 of the link 9 downwardly and rearwardly. Under such conditions the type bar moved in a curved path indicated by the dotted line *b* in Fig. 1 until the type to be printed from reaches the point where the lines *b* and *c* converge, when the final travel of the type bar to the platen in substantially a straight line takes place. This results in the type bar moving in a curved path indicated substantially by the dotted line *b* in Fig. 1 to print from one or the other of the types 7 or 7ª, depending on whether the platen is in the lower or upper case position to receive the impress of the corresponding type.

The construction and relative arrangement of the parts of each type action is such that near the rear or type bearing end of the action the mechanism is thin as viewed from above, and even at its point of maximum thickness, which is more remote from the center from which the type actions radiate, each action has a thickness of only about $\frac{5}{32}$ of an inch. This enables twenty-two type actions to be conveniently brought into a comparatively small widthwise space without unduly crowding them, and to effectively print in substantially a noiseless manner the requisite number of characters with the aid of a standard four-bank keyboard and a single case shift. Moreover, the construction is such that it readily lends itself to the employment of more than the usual eighty-four characters when desired, and provides a light, fast and highly efficient type action with a substantially uniform touch on the printing keys throughout the system.

It will be seen that in the present construction the supporting and guiding links 8 and 9 merely act as such at all times, the driving operation of the type bar being never effected through said links; and that whether the type bar be driven by the actuation of one or the other of the keys 32 or 33, the driving operation as such is effected independently of said links and always through the separate and distinct single driving train from and including the lever 68, which exerts at all operations a thrust on the type bar to move it to printing position always in a uniform manner.

It also will be seen that the pivotal support of the link 9 remains fixed during the actuation of the type bar by the key 32, whereas at this time the pivotal support of the link 8 is automatically shifted. On

566

the other hand, the pivotal support of the link 8 remains fixed and the pivotal support of the link 9 is shifted when the type bar is moved to printing position by an actuation of the key 33.

It will be understood moreover, that the present construction as a whole provides a type action which has a light touch, is speedy in operation, and results to a high degree in a simple, uniform, accurate, noiseless and reliable printing operation that may be controlled by a standard four-bank keyboard with a single case shift.

In addition to the type guides *a* and *a'*, hereinbefore referred to, I prefer to employ a suitable type bar center guide, not shown.

The linkage by which the type bar is guided includes a number of joints or pivots, all of which are free moving joints; but notwithstanding it is found in practice that the types strike the paper in good alinement. The platen and carriage are mounted and controlled the same as in the well-known Noiseless typewriter.

While I have described in considerable detail the constructional form of the various members which go to make up each type action I am aware that various changes may be made in the construction and that certain parts thereof may be employed without others, without departing from my invention as it is defined in the accompanying claims.

What I claim as new and desire to secure by Letters Patent, is:

1. In a typewriting or like machine, the combination in a type action of a type bar, a pair of supporting links therefor, a pair of actuating keys, means controlled by one of said keys for displacing from normal position a pivotal support for one of said links, and means controlled by the other of said keys for displacing from normal position the pivotal support of the other of said links.

2. In a typewriting or like machine, the combination in a type action of a type bar, a pair of supporting links therefor, a pair of actuating keys, means controlled by one of said keys for displacing from normal position the pivotal support for one of said links, means controlled by the other of said keys for displacing from normal position the pivotal support of the other of said links, and additional means controlled by both keys for actuating the type bar.

3. In a typewriting or like machine, the combination of a type bar having a plurality of types thereon, a pair of supporting links therefor, a pair of actuating keys for the type bar, and two pairs of toggle members each pair separately actuated by a different one of said keys for displacing from normal position the pivotal support of one only of said links, whereby the type bar will move in one or another path to print from one or another type on the bar depending on the key actuated.

4. In a typewriting or like machine, the combination of a type bar having a plurality of types thereon, a pair of supporting links therefor, a pair of actuating keys for the type bar, two pairs of toggle members each pair separately actuated by a different one of said keys for displacing from normal position the pivotal supports of one only of said links whereby the type bar will move in one or another path to print from one or another type on the bar depending on the key actuated, and means controlled by one of said keys for assuring a restoration of the toggle members actuated by the other key to substantially a straight line position and thereby insure the restoration to normal position of the pivotal support controlled by said straightened toggle members.

5. In a typewriting or like machine, the combination of a type bar having a plurality of types thereon, a pair of supporting links therefor, a pair of actuating keys for the type bar, two pairs of toggle members each pair separately actuated by a different one of said keys for displacing from normal position the pivotal support of one only of said links and additional means controlled by both keys for actuating said type bar, whereby the type bar will move in one or another path to print from one or another type on the bar depending on the key actuated.

6. In a typewriting or like machine, the combination of a type bar having a plurality of types thereon, a pair of supporting links therefor, a pair of actuating keys for the type bar, two pairs of toggle members, each pair separately actuated by a different one of said keys for displacing from normal position the pivotal support of one only of said links, whereby the type bar will move in one or another path to print from one or another type on the bar depending on the key actuated, and driving connections from both keys to said type bar including motion governing means having a momentum accumulator arranged to decelerate the final printing movement of the type bar and to translate into pressure against the platen the kinetic energy of said accumulator.

7. In a typewriting or like mechine, the combination of a type bar having a plurality of types thereon, a pair of supporting links therefor, a pair of actuating keys for the type bar, two pairs of toggle members each pair separately actuated by a different one of said keys for displacing from normal position the pivotal support of one only of said links, whereby the type bar will move in one or another path to print from one or another type on the bar depending on the key actuated, means controlled by one of

said keys for assuring a restoration of the toggle members actuated by the other key to substantially a straight line position and thereby insure the restoration to normal position of the pivotal support controlled by said straightened toggle members, and driving connections from both keys to said type bar including motion governing means having a momentum accumulator arranged to decelerate the final printing movement of the type bar and to translate into pressure against the platen the kinetic energy of said accumulator.

8. In a typewriting or like machine, the combination of a type bar having a plurality of types thereon, two actuating keys for the type bar, controlling means for controlling the path of movement of said type bar to print from one or another type thereon in accordance with the key actuated, said controlling means including two pairs of toggle members one pair for each key, and a knuckle joint uniting the toggle members of each pair to prevent the associated members from breaking in one direction beyond substantially the straight line position.

9. In a typewriting or like machine, the combination of a type bar having a plurality of types thereon, two actuating keys for the type bar, controlling means for controlling the path of movement of said type bar to print from one or another type thereon in accordance with the key actuated, said controlling means including two pairs of toggle members one pair actuated by each key, and means actuated by each key for straightening the toggle members of the other key and thereby assure their restoration to normal position.

10. In a type action for a typewriting or like machine, the combination of a type bar having a plurality of types thereon, a pair of supporting links therefor, two actuating keys for the type bar, and controlling means for controlling the path of movement of said type bar to print from one or another type thereon in accordance with the key actuated, said controlling means including two pairs of toggle members each pair controlling the pivotal support for only one of said links to shift it independently of the other and each pair of toggle members being actuated or displaced from normal position only by the associated key.

11. In a type action for a typewriting or like machine, the combination of a type bar having a plurality of types thereon; a pair of supporting links therefor; two actuating keys for the type bar; controlling means for controlling the path of movement of said type bar to print from one or another type thereon in accordance with the key actuated, said controlling means including two pairs of toggle members each pair controlling the pivotal support for only one of said links to shift it independently of the other, each pair of toggle members being actuated, or displaced from normal position only by the associated key; and driving connections from both of said keys to said type bar.

12. In a type action for a typewriting or like machine, the combination of a type bar having a plurality of types thereon; a pair of pivotally supported supporting links therefor; two actuating keys for the type bar; controlling means for controlling the path of movement of said type bar to print from one or another type thereon in accordance with the key actuated, said controlling means including two pairs of toggle members each pair controlling the pivotal support for only one of said links to shift it independently of the other and each pair of toggle members being actuated or displaced from normal position only by the associated keys; and driving connections from both keys to said type bar including motion governing means having a momentum accumulator arranged to decelerate the final printing movement of the type bar and to translate into pressure against the platen the kinetic energy of said accumulator.

13. In a type action for a typewriting or like machine, the combination of a type bar having a plurality of types thereon, a pair of links pivotally supporting the same, a pair of independently operable levers supporting said links, a pair of type bar actuating keys, and independently operable means controlled by said keys for actuating said levers to displace one or the other of said links and to print from one or another type on the type bar depending on the key actuated.

14. In a type action for a typewriting or like machine, the combination of a type bar having a plurality of types, an individual supporting bracket for said type bar, a pair of supporting levers on said bracket, a pair of links pivoted on said supporting levers and to said type bar, a pair of actuating keys, and means controlled thereby for moving said type bar selectively to print from one or another type thereon depending on the key actuated, said means comprising independently operable connections between said keys and supporting levers by which either one of said supporting levers is held at rest in normal position when the other is shifted depending on which of said keys is actuated.

15. In a type action for typewriting or like machines, the combination of a type bar having a plurality of types, an individual supporting bracket for said type bar, a pair of key controlled supporting levers on said bracket, a pair of links pivoted on said supporting levers and to said type bar, a pair of actuating keys, and means controlled thereby for moving said type bar selectively

to print from one or another type thereon depending on the key actuated, said means comprising devices by which either one of said supporting levers is held at rest in normal position when the other is shifted by the operation of one of said keys.

16. In a type action for typewriting or like machines, the combination of a type bar having a plurality of types, a pair of supporting links therefor, two actuating keys for said type bar, means controlled by one of said keys for changing the pivotal center of one of said links, and means controlled by the other of said keys for changing the pivotal center of the other of said links, thereby varying the path of movement of the type bar to print from one or another type thereon in accordance with the key actuated.

17. In a type action for typewriting or like machines, the combination of a type bar having a plurality of types, a pair of supporting links therefor, two actuating keys for said type bar, means controlled by one of said keys for changing the pivotal center of one of said links, means controlled by the other of said keys for changing the pivotal center of the other of said links, thereby varying the path of movement of the type bar to print from one or another type thereon in accordance with the key actuated, positively acting means controlled by one of said keys for assuring the return of one of said pivotal centers to normal position, and means controlled by the other of said keys for assuring the return of the other of said pivotal centers to normal position.

18. In a type action for typewriting or like machines, the combination of a type bar having a plurality of types, a pair of supporting links therefor, two actuating keys for said type bar, means including a toggle controlled by one of said keys for changing the pivotal center of one of said links, and means including another toggle controlled by the other of said keys for changing the pivotal center of the other of said links.

19. In a type action for typewriting or like machines, the combination of a type bar having a plurality of types, a pair of supporting links therefor, two actuating keys for said type bar, means including a toggle controlled by only one of said keys for changing the pivotal center of one only of said links, means including another toggle controlled only by the other of said keys for changing the pivotal center of the other of said links, and means controlled by each of said keys for positively rectifying the position of the toggle displaced by the other key.

20. In a typewriting or like machine, the combination of a type bar having a plurality of types thereon, two actuating keys for the type bar, and controlling means for controlling the path of movement of said type bar to print from one or another type thereon in accordance with the key actuated, said controlling means including toggle members united by a knuckle joint to prevent said members from breaking in one direction beyond substantially the straight line position.

21. In a typewriting or like machine, the combination in a type action of a type bar, a pair of supporting links therefor, a pair of actuating keys, means controlled by one of said keys for displacing from normal position a pivotal center of one of said links, means controlled by the other of said keys for displacing from normal position the pivotal center of the other of said links, and driving connections from both keys to said type bar including motion governing means having a momentum accumulator arranged to decelerate the final printing movement of the type bar and to translate into pressure against the platen the kinetic energy of said accumulator.

22. In a typewriting or like machine, the combination in a type action of a type bar, a pair of supporting links therefor, a pair of actuating keys, means controlled by one of said keys for displacing from normal position a pivotal center of one of said links, means controlled by the other of said keys for displacing from normal position the pivotal center of the other of said links, and driving connections from both keys to said type bar including a driving lever actuated by both keys and motion governing means intermediate the type bar and said lever and having a momentum accumulator arranged to decelerate the final printing movement of the type bar and to translate into pressure against the platen the kinetic energy of said accumulator.

23. In a typewriting or like machine, the combination of a type bar having a plurality of types thereon, a pair of supporting links therefor, a pair of actuating keys for the type bar, two pairs of toggle members each pair separately actuated by a different one of said keys for displacing from normal position the pivotal center of one of said links, whereby the type bar will move in one or another path to print from one or another type on the bar depending on the key actuated, and driving connections from both keys to said type bar including motion governing means having a momentum accumulator arranged to decelerate the final printing movement of the type bar and to translate into pressure against the platen the kinetic energy of said accumulator.

24. In a typewriting or like machine, the combination of a type bar having a plurality of types thereon, a pair of supporting links therefor, a pair of actuating keys for the type bar, two pairs of toggle members each pair separately actuated by a different one of said keys for displacing from normal po-

sition the pivotal center of one only of said links, whereby the type bar will move in one or another path to print from one or another type on the bar depending on the key actuated, means controlled by one of said keys for assuring a restoration of the toggle members actuated by the other key to substantially a straight line position and thereby insure the restoration to normal position of the pivotal center of the link controlled by said straightened toggle members, and driving connections from both keys to said type bar including motion governing means having a momentum accumulator arranged to decelerate the final printing movement of the type bar and to translate into pressure against the platen the kinetic energy of said accumulator.

25. In a typewriting or like machine, the combination of a type bar having a plurality of types thereon, two actuating keys for the type bar, controlling means for controlling the path of movement of said type bar to print from one or another type thereon in accordance with the key actuated, said controlling means including two pairs of toggle members one pair actuated by each key, means actuated by each key for straightening the toggle members of the other key and thereby assure their restoration to normal position, and driving connections from both keys to said type bar including motion governing means having a momentum accumulator arranged to decelerate the final printing movement of the type bar and to translate into pressure against the platen the kinetic energy of said accumulator.

26. In a type action for a typewriting or like machine, the combination of a type bar having a plurality of types thereon, a pair of links pivotally supporting the same, a pair of independently operable levers supporting said links, a pair of type bar actuating keys, independently operable means controlled by said keys for actuating said levers to displace one or the other of said links and to print from one or another type on the type bar depending on the key actuated, and driving connections from both keys to said type bar including motion governing means having a momentum accumulator arranged to decelerate the final printing movement of the type bar and to translate into pressure against the platen the kinetic energy of said accumulator.

27. In a type action for a typewriting or like machine, the combination of a type bar having a plurality of types; an individual supporting bracket for said type bar; a pair of supporting levers on said bracket; a pair of links pivoted on said supporting levers and to said type bar; a pair of actuating keys; means controlled thereby for moving said type bar selectively to print from one or another type thereon depending on the key actuated, said means comprising independently operable connections between said keys and supporting levers by which either one of said supporting levers is held at rest in normal position when the other is shifted depending on which of said keys is actuated; and driving connections from both keys to said type bar including motion governing means having a momentum accumulator arranged to decelerate the final printing movement of the type bar and to translate into pressure against the platen the kinetic energy of said accumulator.

28. In a type action for typewriting or like machines, the combination of a type bar having a plurality of types; an individual supporting bracket for said type bar; a pair of supporting levers on said bracket; a pair of links pivoted on said supporting levers and to said type bar; a pair of actuating keys; means controlled thereby for moving said type bar selectively to print from one or another type thereon depending on the key actuated, said means comprising key controlled devices by which one of said supporting levers is held at rest in normal position when the other is shifted by the operation of one of said keys; and driving connections from both keys to said type bar including motion governing means having a momentum accumulator arranged to decelerate the final printing movement of the type bar and to translate into pressure against the platen the kinetic energy of said accumulator.

29. In a type action for typewriting or like machines, the combination of a type bar having a plurality of types, a pair of supporting links therefor, two actuating keys for said type bar, means controlled by one of said keys for changing the pivotal center of one of said links, means controlled by the other of said keys for changing the pivotal center of the other of said links, thereby varying the path of movement of the type bar to print from one or another type thereon in accordance with the key actuated, and driving connections from both keys to said type bar including motion governing means having a momentum accumulator arranged to decelerate the final printing movement of the type bar and to translate into pressure against the platen the kinetic energy of said accumulator.

30. In a type action for typewriting or like machines, the combination of a type bar having a plurality of types, a pair of supporting links therefor, two actuating keys for said type bar, means controlled by one of said keys for changing the pivotal center of one of said links, means controlled by the other of said keys for changing the pivotal center of the other of said links, thereby varying the path of movement of the type bar to print from one or another

570

type thereon in accordance with the key actuated, positively acting means controlled by one of said keys for assuring the return of one of said pivotal centers to normal position, means controlled by the other of said keys for assuring the return of the other of said pivotal centers to normal position, and driving connections from both keys to said type bar including motion governing means having a momentum accumulator arranged to decelerate the final printing movement of the type bar and to translate into pressure against the platen the kinetic energy of said accumulator.

31. In a type action for typewriting or like machines, the combination of a type bar having a plurality of types, a pair of supporting links therefor, two actuating keys for said type bar, means including a toggle controlled by only one of said keys for changing the pivotal center of one of said links, means including another toggle controlled only by the other of said keys for changing the pivotal center of the other of said links, means controlled by each of said keys for positively rectifying the position of the toggle displaced by the other key, and driving connections from both keys to said type bar including motion governing means having a momentum accumulator arranged to decelerate the final printing movement of the type bar and to translate into pressure against the platen the kinetic energy of said accumulator.

32. In a type action for a typewriting or like machine, the combination of a type bar having a plurality of types thereon, a pair of links pivotally supporting the same, a pair of independently operable levers supporting said links, independently adjustable adjusting means for the fulcrums of said levers, a pair of type bar actuating keys, and independently operable means controlled by said keys for actuating said levers to displace one or the other of said links and to print from one or another type on the type bar depending on the key actuated.

33. In a type action for a typewriting or like machine, the combination of a type bar having a plurality of types, an individual supporting bracket for said type bar, a pair of supporting levers on said bracket, a pair of links pivoted on said supporting levers and to said type bar, independently adjustable adjusting means for the fulcrums of said supporting levers, a pair of actuating keys, and means controlled thereby for moving said type bar selectively to print from one or another type thereon depending on the key actuated, said means comprising independently operable connections between said keys and supporting levers by which either one of said supporting levers is held at rest in normal position when the other is shifted depending on which of said keys is actuated.

34. In a type action for typewriting or like machines, the combination of a type bar having a plurality of types, an individual supporting bracket for said type bar, a pair of key controlled supporting levers on said bracket, independently adjustable adjusting means for the fulcrums of said supporting levers, a pair of links pivoted on said supporting levers and to said type bar, a pair of actuating keys, and means controlled thereby for moving said type bar selectively to print from one or another type thereon depending on the key actuated, said means comprising devices by which either one of said supporting levers is held at rest in normal position when the other is shifted by the operation of one of said keys.

Signed at Middletown, in the county of Middlesex and State of Connecticut, this 6th day of February, A. D. 1925.

GEORGE G. GOING.

571

Jan. 25, 1927. 1,615,694

G. G. GOING

TYPEWRITING MACHINE

Filed April 16, 1924 2 Sheets-Sheet 2

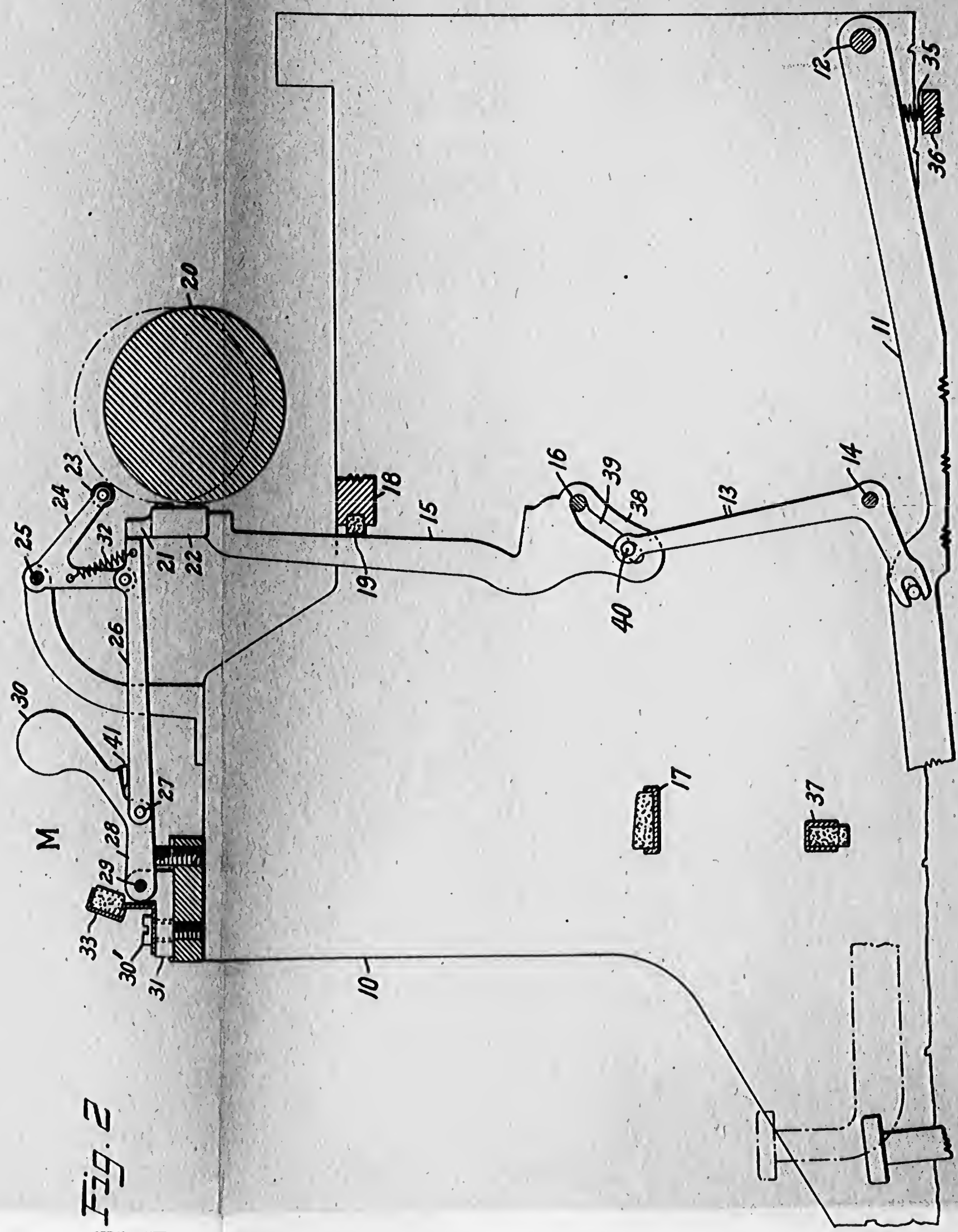

Fig. 2

INVENTOR
George Gould Going
BY
Duell, Warfield & Duell
ATTORNEY

572

Jan. 25, 1927. 1,615,694

G. G. GOING

TYPEWRITING MACHINE

Filed April 16, 1924 2 Sheets-Sheet 1

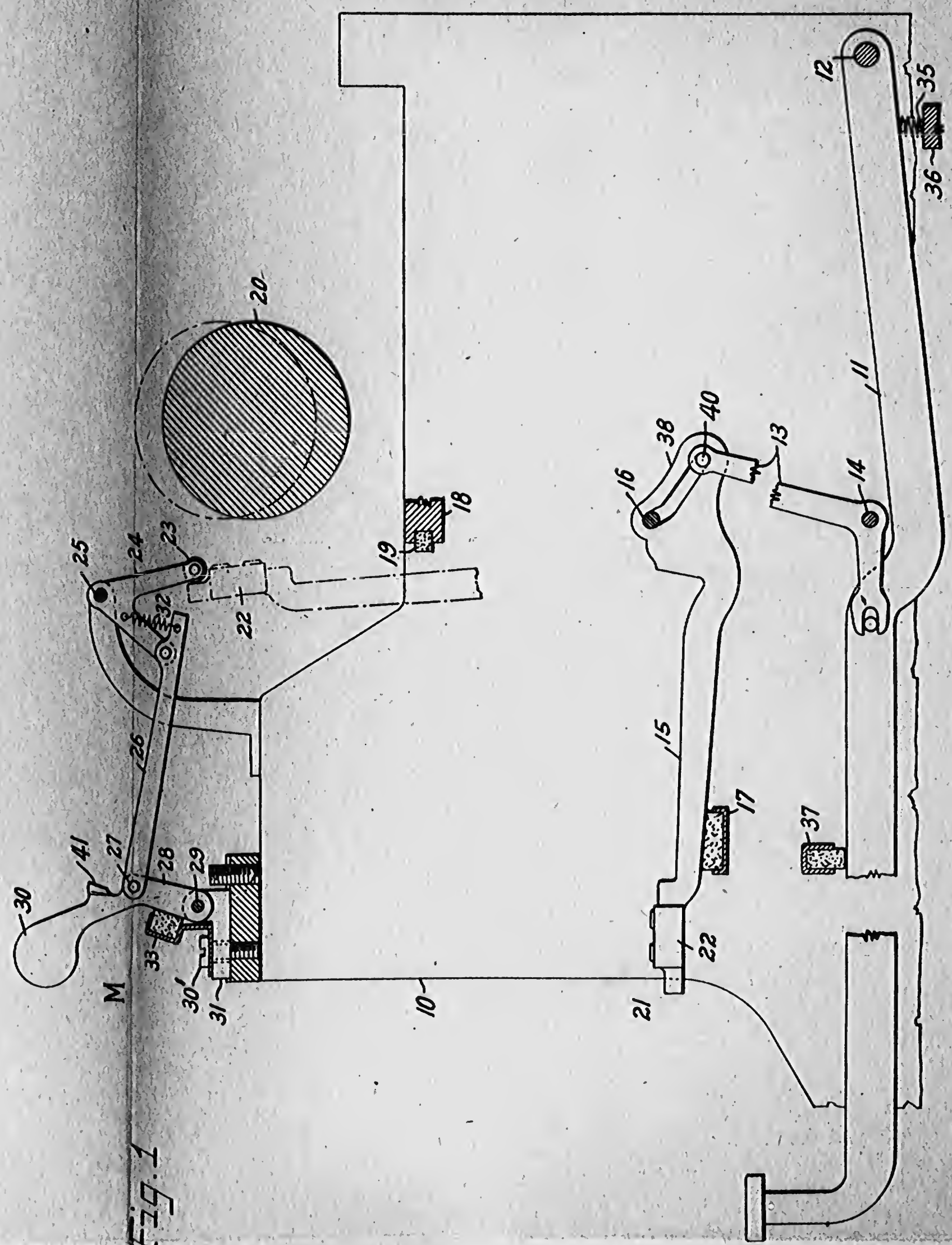

Fig. 1

INVENTOR
George Gomed Going
BY
Duell, Warfield & Duell
ATTORNEY

Patented Jan. 25, 1927. 1,615,694

UNITED STATES PATENT OFFICE.

GEORGE GOULD GOING, OF MIDDLETOWN, CONNECTICUT, ASSIGNOR TO REMINGTON-NOISELESS TYPEWRITER CORPORATION, OF NEW YORK, N. Y., A CORPORATION OF NEW YORK.

TYPEWRITING MACHINE.

Application filed April 16, 1924. Serial No. 703,845.

This invention relates to typewriting machines, and more particularly to front strike machines in which pivoted type bars are employed.

The object of this invention generally stated is to provide an improved construction for type bars and their actuating connections which is functionally and structurally efficient, economical and readily manufactured.

Another and more specific object of this invention is to provide a typewriting machine in which the type bars, particularly pivoted type bars, are prevented from effecting an imprint through impact by means of a fixed stop interposed in the path thereof and in which improved means are provided for causing the type bars to effect pressure imprints after having been arrested by said stop, whereby the printing operation is accomplished substantially without noise.

Other objects of the invention will hereinafter more clearly appear.

The invention accordingly comprises the features of construction, combinations of elements, and arrangements of parts, which will be exemplified in the construction hereinafter described and particularly pointed out in the appended claims.

For a fuller understanding of the nature and objects of the invention reference should be had to the following detailed description taken in connection with the accompanying drawings in which:

Figure 1 is a fragmentary side elevation of one of the type actions and some of the associated parts, the full lines representing the parts as they appear in normal position; and

Figure 2 is a view similer to Fig. 1 but showing the type action in printing position in full lines.

Referring now to the drawing, 10 denotes the frame of the typewriting machine having a series of key levers 11 pivoted at 12 to the rear portion of the frame. Each key lever is adapted to actuate the sub-lever 13, which is pivoted at 14 and is directly connected to actuate the associate type bar shown generally at 15. Each type bar 15 is pivoted in any suitable or well known manner at 16 and when in retracted position is adapted to rest upon the padded support or rest 17. When moved from the retracted to the printing position shown clearly in Fig. 2, each type bar at some intermediate point is adapted to bring into action the means shown generally at M, which finally operates to produce pressure printing. The point in the printing movement of each type bar where it first coacts with the means M is indicated in dotted lines in Fig. 1. Just after the bringing into action of the pressure printing means M, the type bar swings into contact with the contact face of an absorbing cushion 19 carried by a fixed stop 18 interposed in the paths of all of the type bars. This stop is so proportioned and positioned that each type bar under the action of its key is brought to a substantially complete stop in advance of contact with the printing surface of the platen shown at 20; thereby preventing a hammer blow or impact against the platen. The clearance between the type bar and the platen when the former substantially attains this position of rest is in the neighborhood of one one-hundredth of an inch, or so.

In order to bring the means M into action, the type bar is provided at its free end with a projection 21 which extends beyond the type head 22 and is adapted to come into contact with a centrally disposed anti-friction roller 23. This roller is carried on one arm of the bell crank lever 24, the latter being pivoted at 25 to some convenient fixed part of the frame of the machine. The bell crank lever 24 is so proportioned and positioned that the anti-friction roller 23 projects into the path of swing of the projection 21 on each type bar at a point just prior to the contact of a type bar with the cushion 19 of the stop 18. The bell crank lever has its other arm pivotally connected to the rear end (that is, the end adjacent the platen) of the thrust bar 26. The front end of this thrust bar is pivotally connected at 27 with an arm 28, which is pivoted at 29 and has a weighted member 30 projecting upwardly therefrom. The arm 28, as indicated, is pivotally secured to a rigidly held support on the frame of the machine. It is preferable that the support for this arm should be adjustable fore-and-aft of the machine since the efficient operation of this type action depends upon the precise location of the point at which contact by the type bar 15 takes place with the anti-friction roll 23. To provide for this adjustment, headed binding screws 30′ have

threaded stems which pass freely through elongated openings in the foot-piece of a bracket or hanger 31, to which the arm 28 is pivoted; the threaded ends of the screws engaging in tapped openings in the machine frame. By tightening the screws 30′ the bracket 31 is firmly held in its adjusted position.

The single means M co-operates with each type-bar in the system and is therefore common to them all. It is shown in the retracted position in Fig. 1. In order, however, that the parts shall always be brought back to this position after each printing operation, a contractile spring 32 is shown connected to the front arm of the bell crank lever 24 and to the rear end of the thrust bar 26. This spring is normally under tension, so as to draw these parts together. A padded fixed stop 33, however, is provided on the hanger 31 to prevent the pivoted arm 28 from swinging too far toward the front and thereby regulate the normal position of the roller 23 in the path of the projections 21 on the type bars.

In order to aid in returning the parts of each type action to normal position an expansion spring 35 is inserted under each key lever 11 adjacent its rear end, and between said lever and a fixed part 36 of the frame of the machine. A fixed padded stop 37 is also provided to limit each key lever in its return movement to normal position.

In the drawing, it will be seen that the lever arm or heel 38 of each type bar 15 is provided with a slot 39 in which the pin 40 at the upper end of the associated sub-lever engages in order to actuate the type bar.

It will be also understood that while but one type action is shown this is done in the interest of clearness. Such disclosure accordingly should be taken as indicative of the plurality of such instrumentalities which would be used substantially always in constructions embodying this invention. In the side actions the upright arms of the sub-levers 13 may be inclined inwardly to compensate for the difference in width between the system of key levers and the system of type bars.

The operation of the construction described is as follows:

When a key lever 11 is depressed from the position shown in full lines in Fig. 1 to the full line position shown in Fig. 2 by the operator, this movement causes the upper end of the associated sub-lever 13 to move forwardly, imparting a downward pull to the heel 38 of the companion type bar 15. This type bar in consequence swings through an arc toward printing position, which is shown in full lines in Fig. 2. When the type bar reaches the intermediate position shown in broken lines in Fig. 1, the projection 21 contacts with the anti-friction roller 23. Considerable momentum at once passes from the swinging type bar and is transmitted to the bell crank lever 24, which in turn applies a pull and rearward endwise thrust to the thrust bar 26. This bar 26, as will be observed, is pivotally mounted to swing at both ends on its pivoted linkage or supports 24 and 28. The thrust bar 26 in turn transmits the pull on to the arm 28 to swing it together with the weighted member 30 from its reclining position toward the platen. The type bar 15, however, still swings further and approaches the platen while continuously applying momentum through the anti-friction roller 23 to the bell crank lever 24 until it comes into contact with the padded stop 18. The momentum thus communicated to the member 30 causes it to continue its arcuate movement toward the platen, the anti-friction roller on the bell crank lever now moving rearwardly at an accelerated rate out of contact with the projection 21 on the type bar. This movement continues until the rear end of the thrust bar is brought into contact with the front face of the projection 21 on the type bar 15.

The thrust bar 26 and the arm 28 comprise a toggle linkage adapted to apply force to the upper end of the type bar at a time when the type bar is in contact with the arresting pad 19 and when the printing face of the effective type is very close to the printing surface of the platen, as pointed out above. The energy in the member 30, however, is not finally spent until the toggle linkage is completely straightened, as shown in Fig. 2. In this straightened position, the toggle quickly applies a final thrust to the adjacent face of the projection 21 on the type bar 15, pressing the type bar against the resistance of the pad 19 and in overcoming such resistance presses the effective type face quickly against the surface of the platen, or the paper thereon. A stop at 41 is provided on the arm 28 to coact with the bar 26 and prevent the toggle linkage from swinging through its straight line position, shown in Fig. 2. By the straightening of the toggle, the spring 32 is put under more tension, so that as soon as the momentum acquired by the member 30 has been spent in finally printing by pressure exerted through the straightened toggle, the energy stored in the extended spring 32 and the reaction of the parts immediately effect a withdrawal of the thrust bar 26 from contact with the type bar, and bring the parts of the toggle linkage to the normal position of rest, shown in full lines in Fig. 1. Substantially at the same instant that the means at M are thus withdrawn from the type bar, the latter begins to swing back to normal position partly under the influence of its own weight and the reaction of the pad 19 and partly under the influence of the associated spring

35, until the retracted position, shown in full lines in Fig. 1, is again attained.

By this invention, it is thus seen that type actions each comprising a type bar having a key lever with actuating connections thereto may be provided with common means actuated by but independent of any direct connection with the type bar for effecting pressure printing and that a stop is employed which is fixed in the path of movement of each type bar to prevent the type bar from swinging under its own momentum into contact with the printing surface of the platen. Such common means is, by this invention, designed to accomplish pressure printing and is arranged to receive momentum from the type bar for a brief period at a point just a little before the instant when the type bar contacts with the stop. At this instant, the type bar is moving with substantially a maximum velocity, and therefore imparts considerable momentum to the parts of the pressure printing means. The pressure printing means thus acquires sufficient energy to complete the printing operation after the type bar has come substantially to a position of rest against the fixed stop. Using a toggle linkage as the pressure printing instrumentality insures finally a quick and powerful application of the energy transmitted thereto in effecting an imprint under the influence of stored energy.

Changes may be made in the above construction without departing from the invention as it is defined in the accompanying claims.

Having described my invention, what I claim as new and desire to secure by Letters Patent, is:

1. In a typewriting machine having a platen, the combination with a type action comprising a key lever, a type bar and actuating connections therebetween, of a stop fixed in the path of the type bar and arranged substantially to arrest the type bar at a relatively short distance from said platen, and means disconnected from but operable by the type bar to apply a printing pressure as distinguished from a blow to the type bar after it comes in contact with said stop and thereby overcome the resistance of said stop and effect a pressure imprint.

2. In a typewriting machine having a platen, the combination with a type action comprising a key lever, a type bar and actuating connections therebetween, of a stop arranged substantially to arrest the type bar at a relatively short distance from said platen, and means operable by the type bar but independent of direct connections therewith to apply a printing pressure to the type bar as it comes in contact with said stop whereby to effect printing, said stop being fixed in position below and in advance of the platen to intercept the type bar in its line of travel.

3. In a typewriting machine having a platen, the combination with a type action comprising a key lever, a type bar and actuating connections therebetween, of a fixed stop arranged substantially to arrest the type bar at a relatively short distance from said platen, and means having a part thereof normally arranged in the path of the type bar to be struck thereby at the last portion of its printing stroke and cause such means to apply a printing pressure to the type bar as it comes in contact with said stop whereby to effect a pressure imprint, said pressure applying means receiving its operating energy from the momentum of the type bar.

4. In a typewriting machine having a platen, the combination with a type action comprising a key lever, a type bar and actuating connections therebetween, of a stop fixed in the path of the type bar and arranged substantially to arrest the type bar at a relatively short distance from said platen, and means disconnected from said type action and stop but normally arranged in the path of the type bar and operable thereby to apply a printing pressure to the type bar after it comes in contact with said stop whereby to effect the printing operation by pressure, said means being arranged to receive its operating energy from the momentum of the type bar when it coacts therewith and disposed to apply the printing pressure along lines substantially parallel to the movement of the type bar during the printing operation.

5. In a typewriting machine having a platen, the combination with a type action comprising a key lever, a type bar and actuating connections therebetween, of a fixed padded stop arranged substantially to arrest the type bar at a relatively short distance from said platen, and means separate and distinct from said type action but normally arranged in the path of the type bar and operable thereby to apply a printing pressure to the type bar after it comes in contact with said stop whereby to effect a pressure imprint, said means being normally arranged in the path of said type bar to be struck thereby and receive its operating energy from the momentum of the type bar and provided with means to return it to its normal inactive position after the printing.

6. In a typewriting machine having a platen, the combination with a type action comprising a key lever, a type bar and actuating connections therebetween, of a stop arranged substantially to arrest the type bar at a relatively short distance from said platen, and means operable by the type bar to apply a printing pressure to the type bar as it comes in contact with said stop where-

by to effect printing, said means comprising a thrust bar for transmitting pressure to the type bar, and thrust bar supporting means adapted to support the thrust bar out of the path of the type bar and to move it into engagement with the type bar when said means operates.

7. In a typewriting machine having a platen, the combination with a type action comprising a key lever, a type bar and actuating connections therebetween, of a stop arranged substantially to arrest the type bar at a relatively short distance from said platen, and pressure applying means operable by the type bar to apply a printing pressure to the type bar as it comes in contact with said stop whereby to effect printing, said pressure applying means comprising a thrust bar for transmitting pressure to the type bar, and thrust bar supporting means adapted to support the thrust bar out of the path of the type bar and to move it into engagement with the type bar when said means operates, said thrust bar supporting means being provided with an energy receiving member disposed in the path of the type bar whereby said means is set in motion upon the operation of a type bar.

8. In a typewriting machine having a platen, the combination with a type action comprising a key lever, a type bar and actuating connections therebetween, of a stop arranged substantially to arrest the type bar at a relatively short distance from said platen, and means independent of the type action and operable by the type bar to apply a printing pressure to the type bar as it comes in contact with said stop whereby to effect printing, said pressure applying means comprising a thrust bar for transmitting pressure to the type bar, and thrust bar supporting means adapted to support the thrust bar out of the path of the type bar and to move it into engagement with the type bar when the pressure applying means operates, said thrust bar supporting means being provided with an energy receiving member disposed in the path of the type bar whereby the pressure applying means is set in motion upon the operation of a type bar, and a weight member disposed in a normally inactive position adapted to acquire momentum under the action of the type bar when the pressure applying means is set in motion, and to co-operate with the thrust bar to apply a printing pressure to the type bar.

9. In a typewriting machine having a platen, the combination with a series of type actions each comprising a key lever, a type bar and actuating connections therebetween, of a stop fixed in the path of all of said type bars and arranged substantially to arrest the same at a relatively short distance from said platen, and a single means disconnected from but common to all of the type bars and normally in the paths thereof to be actuated thereby and receive and store energy from each of said type bars as it swings toward the platen and to expend such energy by applying pressure to said swinging type bar and cause it to effect a pressure imprint after it has come substantially to rest against said stop.

10. In a typewriting machine having a platen, the combination with a type action comprising a key lever, a type bar and actuating connections therebetween, of a stop disposed in the path of said type bar and arranged substantially to arrest the same at a relatively short distance from said platen, and a toggle linkage separate and distinct from the type action and pivotally attached to said machine and disposed to engage with the type bar as it swings toward the platen and to receive energy from said type bar to be applied thereto when the type bar has come substantially to rest against said stop and thereby cause an imprint to be effected.

11. In a typewriting machine having a platen, the combination with a type action comprising a key lever, a type bar and actuating connections therebetween, of a stop disposed in the path of said type bar and arranged substantially to arrest the same at a relatively short distance from said platen, and a toggle linkage separate and distinct from the type action and pivotally attached to a fixed part of said machine and disposed to engage with said type bar at an intermediate point in the movement of the latter toward the platen, said toggle linkage being arranged to absorb energy from said type bar and having a portion adapted to apply a thrust thereto when the type bar has come in contact with said stop.

12. In a typewriting machine having a platen, the combination with a series of type actions comprising a plurality of key levers and type bars arranged to be individually actuated thereby, of a stop disposed in the path of swing of said type bars and arranged substantially to arrest them at a relatively short distance from said platen, and a common toggle linkage independent of direct connections with said type actions pivotally attached to a fixed part of said machine and disposed to engage with each type bar at an intermediate point in its path of swing and arranged to apply a thrust to the engaged type bar when in contact with said stop.

13. In a typewriting machine having a platen, the combination with a series of type actions comprising a plurality of key levers and pivoted type bars arranged to be individually actuated thereby, of a common toggle linkage separate and distinct from said type actions and pivotally attached to

a fixed part of the machine and disposed to be engaged and actuated by each of said type bars at an intermediate point in its swing to printing position and apply a thrust to the engaged type bar and effect a pressure imprint therefrom.

14. In a typewriting machine having a platen, the combination with a series of type actions comprising a plurality of key levers and type bars arranged to be individually actuated thereby, of a common toggle linkage separate and distinct from said type actions and pivotally attached to a fixed part of said machine and disposed to engage with each of said type bars at an intermediate point in the movement thereof to printing position, said toggle linkage being arranged to absorb energy from each of said type bars and having a portion adapted to apply a thrust thereto subsequent to the instant of engagement.

15. In a typewriting machine having a platen, the combination with a series of type actions comprising a plurality of key levers and type bars arranged to be individually actuated thereby, of a common means separate and distinct from said type actions and adapted to apply a printing pressure to each of said type bars, said means comprising a thrust bar, a pivotal supporting means therefor, and an anti-friction engaging means rigidly extending from said supporting means into the path of swing of each of said type bars whereby said anti-friction means is engaged by each type bar as it swings to printing position to actuate the thrust bar and apply a printing pressure to the engaged type bar.

16. In a typewriting machine having a platen, the combination with a series of type actions comprising a plurality of key levers and type bars having individual actuating connections therebetween, of a single means operable by each of said type bars and adapted to apply a printing pressure thereto, said means comprising a thrust bar and pivotal supporting means attached to the frame of the machine, said supporting means being provided with means for engaging with each of the type bars as it swings to printing position and arranged to absorb energy from said engaged type bar and finally to apply a thrust thereto.

17. In a typewriting machine having a platen, the combination with a series of type actions comprising a plurality of key levers and pivoted type bars having individual actuating connections therebetween, of a common type bar pressing means arranged normally in the path of each type bar to be actuated thereby and apply the force thus derived to the type bar as it swings toward printing position and thus effect a pressure imprint therefrom.

18. In a typewriting machine, the combination of a platen, a key actuated type bar, a pressure mechanism having one part arranged normally in the path of movement of the type bar whereby the pressure mechanism is actuated, said part being adapted to be moved out of the path of said type bar, and said pressure mechanism having another part that moves up behind the type bar and presses the type against the platen after the first mentioned part has been moved out of the path of the type bar.

In testimony whereof I affix my signature.

GEORGE GOULD GOING.

578

Feb. 1, 1927. 1,615,835

G. G. GOING

TYPEWRITING MACHINE

Filed April 16, 1924 2 Sheets-Sheet 2

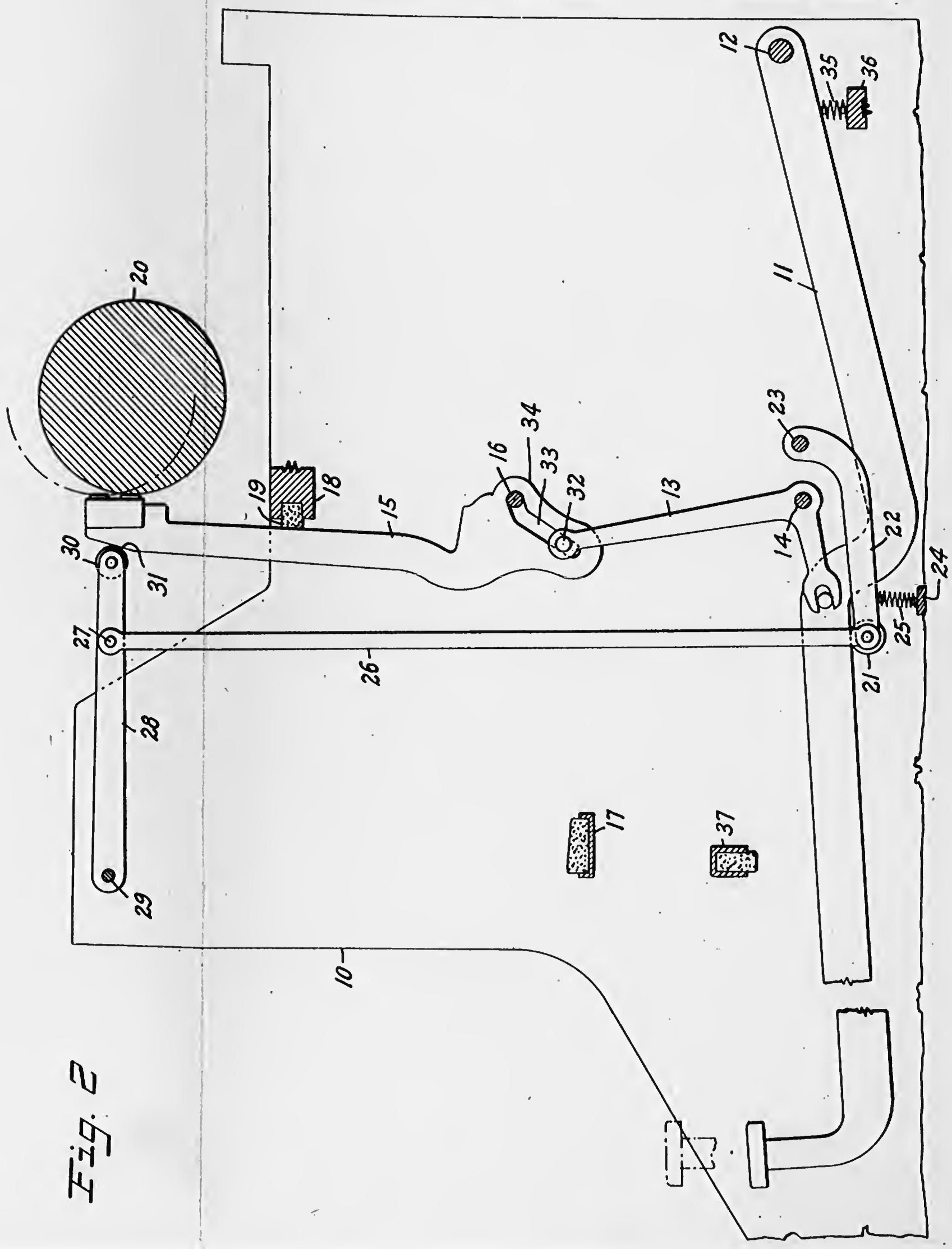

Fig. 2

INVENTOR
George Gaines Going
BY
Dwell Warfield & Dwell
ATTORNEY

579

Feb. 1, 1927. 1,615,835

G. G. GOING

TYPEWRITING MACHINE

Filed April 16, 1924 2 Sheets-Sheet 1

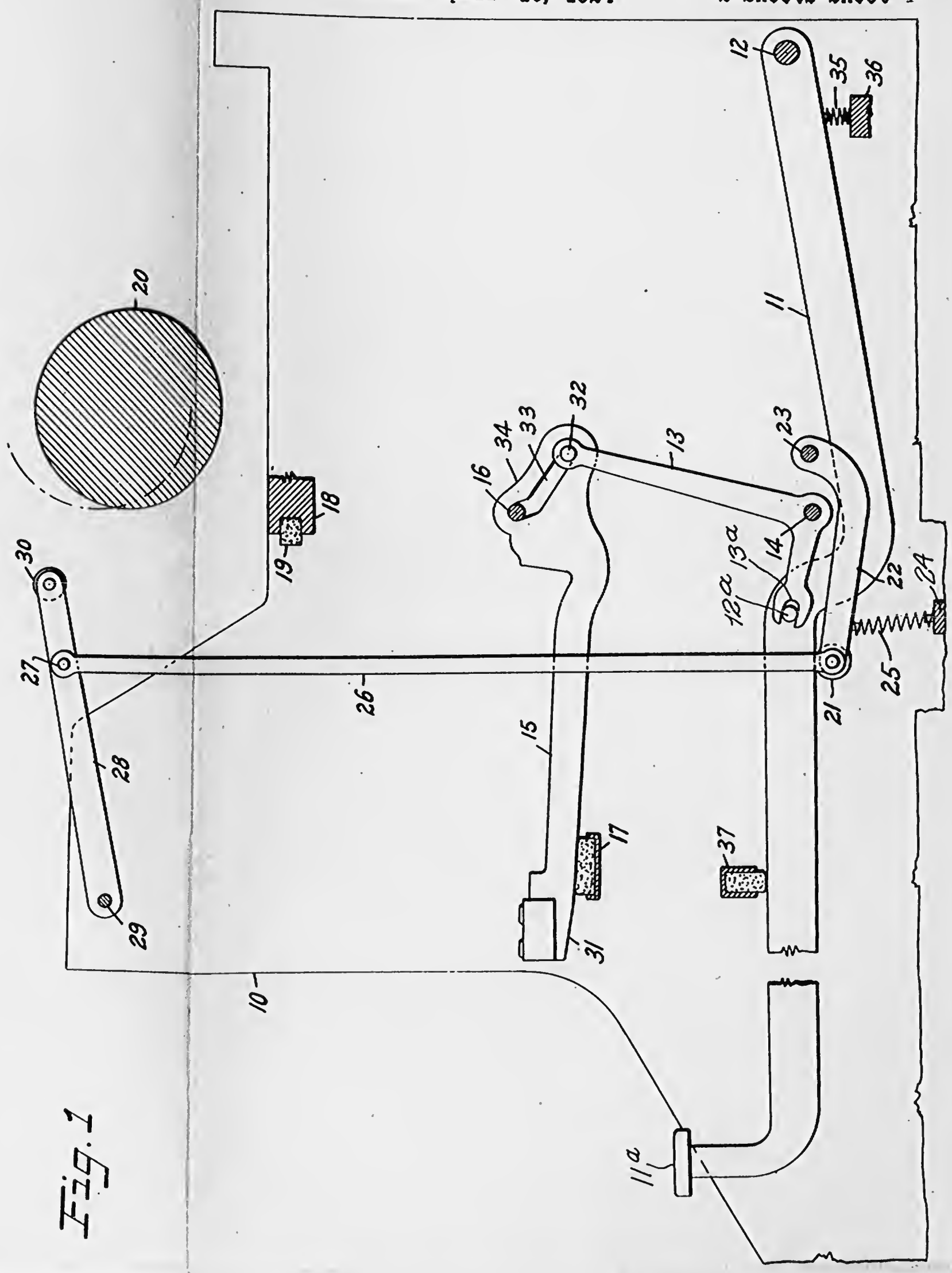

Fig. 1

INVENTOR
George Gould Going
BY
Duell, Warfield & Duell.
ATTORNEY

Patented Feb. 1, 1927. 1,615,835

UNITED STATES PATENT OFFICE.

GEORGE GOULD GOING, OF MIDDLETOWN, CONNECTICUT, ASSIGNOR TO REMINGTON-NOISELESS TYPEWRITER CORPORATION, OF NEW YORK, N. Y., A CORPORATION OF NEW YORK.

TYPEWRITING MACHINE.

Application filed April 16, 1924. Serial No. 706,844.

This invention relates to typewriting machines, and more particularly to front stroke machines in which pivoted type bars are employed.

The object, generally stated, of this invention is to provide a simple and improved construction for type bars and their actuating connections which is functionally and structurally efficient, and may be economically manufactured.

Another and more specific object of this invention is to provide a typewriting machine, in which the type bars, particularly pivoted type bars, are prevented from printing through impact by means of a stop, and to provide improved means for causing the type bars to print by pressure after having been arrested by said stop, whereby the printing operation is accomplished substantially without noise.

To the above and other ends which will hereinafter appear my invention consists in the features of construction, combinations of elements, and arrangements of parts set forth in the following description and particularly pointed out in the appended claims.

For a fuller understanding of the nature and objects of the invention reference should be had to the following detailed description taken in connection with the accompanying drawing, in which:

Figure 1 is a view, mainly diagrammatic, and in side elevation, showing part of a front stroke typewriting machine provided with a type action and associated parts constructed in accordance with this invention; the view illustrating the parts in normal position, and

Figure 2 is a view similar to Fig. 1 but showing the parts disposed as they appear when the type bar is in printing position.

Referring now to the drawings, 10 denotes the frame of the typewriting machine having a key lever 11 pivoted at 12 adjacent the rear portion of the frame and provided with a printing key 11[a]. The key lever, as indicated, is suitably connected, as by a pin and slot connection 12[a], 13[a], with a sub-lever 13 which is pivoted at 14 and is directly connected to actuate the associated type bar, shown generally at 15. The type bar is mounted to turn on a fixed pivot 16 to the printing position, and when in retracted position rests upon the support 17. When swung from the normal, or retracted, position to the printing position, as shown more clearly in Fig. 2, the type bar strikes against the stop 18 which, as shown, is faced with a soft pad or cushion 19 in order the better to absorb both the noise and the momentum of the type bar when it comes in contact with the stop. This stop is so positioned and constructed that the type bar may be swung around its pivot 16 by the parts thus far described from its retracted position to a position which approaches contact with the platen 20 very closely, the clearance from the platen afforded by the stop being in the neighborhood of, say, a hundredth of an inch or so. The stop, therefore, will prevent the type on the bar thus actuated from reaching the platen or the paper thereon, and prevent an impact or hammer blow.

It will, of course, be understood that while but one type action at the center of the system has been disclosed, this has been done in the interest of clearness. Such disclosure accordingly should be taken as indicative of the plurality of such type actions except for the slight structural changes required for the side actions. Thus it will be understood that upright arms 13 of the sub-levers at the sides of the system are inclined inwardly in the usual manner to compensate for the difference in width between the system of key levers and the system of type bars.

In order to effect pressure printing as distinguished from an impact or hammer blow, there is disposed beneath the key levers the transverse bar 21, which is swung from a pair of hangers 22 pivoted, as indicated at 23, to the frame of the machine. The bar 21 may be constructed, if desired, to function as the so-called ordinary "universal" bar which functions to actuate the spacing mechanism (not shown), or as wholly independent thereof, as the case may be. The hangers 22, when they swing, each preferably acts to compress a returning spring 25, disposed between it and a fixed part of the machine, shown at 24. The bar 21 is actuated by each key lever 11, and is provided with an upwardly extending centrally disposed connecting rod 26, which is pivotally connected at 27 to a centrally located oscillating lever 28. This oscillating lever as indicated is pivoted at 29 to the upper front portion of the frame 10 and

preferably carries an anti-friction roller 30 at its free end. This oscillating lever operates in common with each type bar, and its operation is so proportioned and timed that when a type bar has just swung into contact with the padded face of the stop 18, the roller 30 has just been pulled down sufficiently behind such type bar to engage with the rear surface 31 of the free end portion thereof. This surface 31 is preferably hardened and arranged to serve as an inclined face or cam along which the thrust force of the downwardly moving oscillating lever 28 is applied through the contact of the anti-friction roller 30 on it. The effect of the force thus applied to each type bar by the lever 28 is to press the registering type face against the paper, the actuated type bar at this time compressing the cushion 19 sufficiently to enable the imprint to be noiselessly effected.

The connecting of each sub-lever 13 with the associated type bar 15 is shown, in the present instance, as accomplished by means of a pin 32 in the upper end of the sub-lever which engages with an elongated slot 33 in the heel 34 of the type bar.

To aid in returning the parts of each type action to normal position, an expansion spring 35 is arranged under each key lever adjacent to its rear end and bears at its lower end against a fixed part 36 of the frame of the machine. A fixed padded stop 37 is also provided to arrest the return movement of the key levers.

The operation of the construction described is as follows: When a key 11[a] is depressed from the position shown in Fig. 1 to the full line position shown in Fig. 2, this movement causes the upper end of the associated sub-lever 13 to move forwardly, imparting a downward pull on the heel 34 of the connected type bar 15. This type bar, in consequence, swings through an arc toward printing position which is shown in Fig. 2. When this type bar reaches an intermediate position just a little way from the platen surface, it just passes under the roller 30 so that its subsequent movement for a very short distance permits the further downward movement of the key lever 11 to cause the anti-friction roller to engage with the cam edge at 31. The type bar still advances, however, toward the platen under the urge from the key lever until the stop at 18 is encountered. The registering type on the bar is now but a short distance from the printing point so that the subsequent downward movement of the key lever wedges the anti-friction roller 30 further along the cam edge 31 to force the type bar against and compress the pad 19 and effect a pressure imprint on the paper against the resistance of the pad 19.

When the finger of the operator is removed from the key the parts are adapted quickly to return to the normal or retracted position. The springs 25 and 35 and the compressed pad 19 all aid in effecting a quick return of the parts to normal position. It will thus be seen that by this invention a type action having an ordinary pivoted type bar is actuated in the usual manner but is prevented from effecting a hammer or impact imprint through the use of the stop 18—19, so that the registering type face of the arrested type bar is separated from the platen surface by a relatively small distance. The key lever however is arranged to operate the independent means 21, 26 and 28, which in the construction shown would be common to all the type bars, such means being arranged to apply a relatively great force behind the head of the type bar just after it has come to rest against the stop. Force thus applied causes the yielding of the pad 19, so that the type bar is forced through the relatively short distance remaining into contact with the platen surface or the paper thereon so that printing is effected under the influence of pressure in a substantially noiseless manner. The kinetic energy of the moving parts is thus substantially absorbed by the stop, the energy for actual printing being supplied as pressure through the co-acting but independent mechanical means here provided.

Various changes may be made without departing from my invention as it is defined in the accompanying claims.

Having described my invention, what I claim as new and desire to secure by Letters Patent, is:

1. In a front stroke typewriting machine having a platen, the combination with a type action comprising a key lever, a type bar mounted to turn on a fixed pivotal center and to effect an imprint against the front face of the platen, and actuating connections between the key lever and type bar, of a cushion stop fixedly maintained at all times in the path of said type bar as it swings to printing position and arranged substantially to noiselessly arrest the same at a relatively short distance from said platen, and a pivoted lever separate and distinct from said stop and normally out of the path of the type bar in the printing movement of the latter but arranged to oscillate behind said type bar and coact therewith and provided with independent actuating connections to said key lever, said pivoted lever being arranged to engage with said type bar when the latter is substantially arrested by said fixed cushion stop and apply pressure to the bar to complete the printing stroke around the fixed pivotal center of the type bar.

2. In a typewriting machine having a platen, the combination with a type action comprising a key lever, a type bar mounted

to turn on a fixed pivotal center, and actuating connections between the key lever and type bar, of a padded stop fixed in the path of said type bar as it swings to printing position and arranged substantially to arrest the same at a relatively short distance from said platen, and an oscillating lever pivoted to a fixed part of said machine and having independent actuating connections to said key lever and arranged to swing in behind said type bar when the latter is substantially arrested and to engage therewith and press it by a wedging action against the printing surface of the platen and against the resistance of said padded stop.

3. In a typewriting machine having a platen, the combination with a type action comprising a key lever, a type bar mounted to turn on a fixed pivotal center and actuating connections between said key lever and type bar, of a padded stop fixed in the path of said type bar as it swings to printing position and arranged substantially to arrest the same at a relatively short distance from said platen, and an oscillating lever pivoted to a fixed part of said machine behind the type bar when the latter is in printing position, said lever having independent actuating connections to said key lever and provided with an anti-friction roller at its free end and arranged to engage with the type bar when the latter is substantially arrested, said type bar having an engaging surface formed at its rear edge and adapted to receive a continued movement around its fixed pivotal center from said oscillating lever when the latter engages the type bar and thereby effect a pressure imprint against the platen surface or the paper thereon while the type bar is pressed against the resistance of said padded stop.

4. In a front stroke typewriting machine having a platen, the combination with a series of type actions each comprising a key lever, a type bar mounted to turn on a fixed pivotal center in its movement from normal to printing position, and individual actuating connections between each key lever and the associated type bar, of a yielding stop fixed in the path of the type bars and arranged substantially to arrest the swinging movement thereof at a relatively short distance from said platen, and a pressure applying lever actuated by all of said key levers and arranged to engage any of the actuated type bars and to apply a camming pressure thereto substantially immediately after such type bar has been arrested and effect a pressure imprint by pressing said type bar beyond the point where it is initially arrested by said stop in its swinging movement.

5. In a typewriting machine having a platen, the combination with a type action comprising a key lever, a pivoted type bar and actuating connections therebetween, of a stop fixed in the path of and arranged to arrest said type bar at a relatively short distance from said platen, and a pivoted member having an independent actuating connection with said key lever and arranged to swing across the path of swing of said type bar as the latter swings toward printing position and to engage therewith substantially immediately after the type bar has been arrested and press the type bar against the resistance of said stop and beyond the point where the type bar was initially arrested by the stop and thus effect a pressure imprint.

6. In a typewriting machine having a platen, the combination with a type action comprising a key lever, a pivoted type bar and actuating connections therebetween, of a fixed stop arranged substantially to arrest said type bar at a relatively short distance from said platen, and an oscillating lever having an independent actuating connection with said key lever, said lever being pivotally attached to a fixed part of the machine and having its free end arranged to swing across the path of swing of said type bar and to engage therewith as the type bar swings to printing position, said oscillating lever and actuating connection being proportioned to engage with said type bar substantially immediately after the type bar has come in contact with said stop and press the type bar to printing position against the resistance of said stop.

7. In a typewriting machine having a platen, the combination with a type action comprising a key lever, a pivoted type bar and actuating connections therebetween, of a fixed stop arranged substantially to arrest said type bar at a relatively short distance from said platen, and an independently actuated means arranged to engage with said type bar substantially immediately after it has come into contact with said stop, whereby pressure is applied to said type bar to cause it to effect a pressure imprint against the platen and in opposition to the resistance of said fixed stop.

8. In a typewriting machine having a platen, the combination with a type action comprising a key lever, a pivoted type bar and actuating connections therebetween, of a stop arranged substantially to arrest said type bar at a relatively short distance from said platen, and an oscillating lever pivotally attached to a fixed part of the machine having an independent actuating connection with said key lever, the free end of said oscillating lever being arranged to swing across the path of said type bar and engage at the rear of the printing face of said type bar, the engaging portion of said type bar being formed as an inclined plane whereby the engagement results in applying a con-

583

tinued movement of the type bar against the resistance of said stop and causing said type bar to effect pressure imprint against the platen.

9. In a front stroke typewriting machine, the combination with a platen, a pivoted type bar, a key lever connected to operate the same through an intervening bell crank, a yielding stop for the type bar, a lever arranged in front of and opposite the platen for pressing the type bar against the platen, and a connection from said pressing lever to said key lever.

In testimony whereof I affix my signature.

GEORGE GOULD GOING.

May 27, 1930. G. G. GOING 1,760,641

TYPEWRITING MACHINE

Filed Feb. 9, 1928

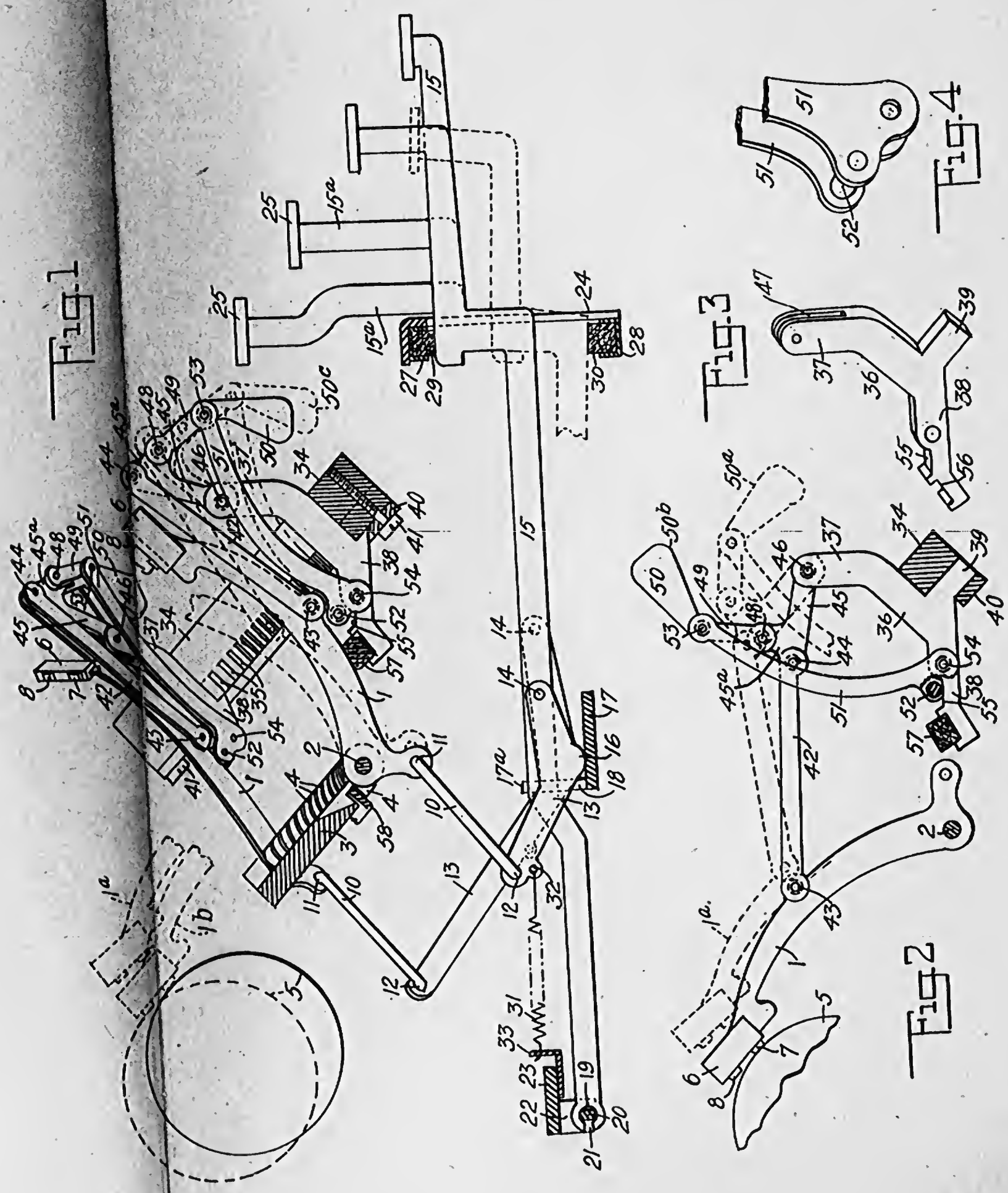

WITNESSES

E. M. Wells.

M. W. Pool

INVENTOR

George G. Going

BY Jacob Felbel

ATTORNEY

Patented May 27, 1930 1,760,641

UNITED STATES PATENT OFFICE

GEORGE G. GOING, OF MIDDLETOWN, CONNECTICUT, ASSIGNOR TO REMINGTON TYPEWRITER COMPANY, OF ILION, NEW YORK, A CORPORATION OF NEW YORK

TYPEWRITING MACHINE

Application filed February 9, 1928. Serial No. 253,076.

My invention relates to type actuating mechanism, and its main object is to provide type bar actuating mechanism which is practically noiseless in operation and is particularly adapted to small writing machines of the sort commonly called portable typewriters. More specifically, an object of the invention is to improve the construction disclosed in my Patent No. 1,471,153 dated October 16, 1923.

To the above and other ends which will hereinafter appear, my invention consists in the features of construction, combinations of devices and arrangements of parts hereinafter described and particularly pointed out in the claims.

The preferred form of the invention is shown in the accompanying drawings wherein

Fig. 1 is a front-to-rear fragmentary vertical sectional view taken about centrally of a typewriting machine embodying my invention.

Fig. 2 is a fragmentary operating view showing in side elevation a type bar and part of the actuating devices as they appear in printing position.

Figs. 3 and 4 are perspective views of certain of the parts.

As appears from Fig. 1, the machine embodying the present form of my invention employs a set of type bars 1 pivoted in an arc of a circle and adapted for front strike writing, said type bars turning about fixed centers and preferably being mounted on an arcuate pivot wire 2 which is secured to a type bar support or segment 3 of any suitable construction. The type bars are disposed in guide slots 4 which are cut radially in the segment at its lower side, said segment inclining upward and rearward towards the platen 5 which is diagrammatically illustrated. Said platen is mounted on a suitable carriage adapted to travel back and forth transversely of the machine to afford letter spacing movements, the platen being also adapted to be rotated on its axis for line spacing and other purposes. No letter spacing or line spacing devices are shown herein but any suitable devices may be employed for carrying out these functions. Each type bar carries a type block 6 which is preferably provided with two types, a lower case type 7 and an upper case type 8. Normally the lower case types are effective to print, but the upper case types may be rendered operative at will by a relative shift between the platen and type bars effected in any known manner. The type bars are inclined normally upward and forward from their pivots 2 and are so related to the printing point on the upper front quarter of the platen that when actuated to print said type bars are swung upward, rearward, and then downward to co-act with the platen. As is well understood, the type bars at and near the middle of the system are substantially straight throughout their lengths while the outer type bars are bent near their type ends to varying extents in order to bring their types in proper relationship with the printing point on the platen.

The actuating devices for the type bar comprise a set of keys and suitable operating connections between the keys and the type bars. As shown, such connections comprise links 10 one for each type bar, each link being connected at its forward end at 11 to the associate type bar, the rear end of the link being connected at 12 to a sub-lever 13 which is pivotally connected at 14 to a key lever 15. The under portion of each sub-lever is provided with a curved bearing face 16 which rests on and cooperates with a transversely extending bar 17 arranged below the sub-levers and key levers and mounted on the frame of the machine. The bearing bar 17 is provided with an upstanding extension 17[a] formed with vertical kerfs or guide slots 18 which accommodate and guide the key levers 15 and sub-levers 13 preferably in the manner more fully disclosed in my prior application Sr. No. 232,582, filed November 11, 1927. During printing operations the sub-levers 13 are adapted through their bearing faces 16 to ride on and over the horizontal faces of the bar 17, the construction providing a yielding connection between the key and key lever of each type action on the one hand and the type bar on the other hand. The key levers 15 are arranged in substantial parallelism fore and

aft of the machine, and at their rear ends are formed with circular holes 19 which cooperate with a fulcrum rod 20 flattened at opposite sides so that when partly turned it permits disconnection from the key levers through cut-outs 21 therein. The fulcrum rod 20 is suitably supported at its ends on ears 22 depending from a frame bar 23. The key levers 15 extend forward and may be guided near their front ends in a stationary slotted plate or comb 24, the forward end portions of the key levers terminating in stems 15[a] to the tops of which are secured key caps or keys 25. The key levers are of varying lengths and their stems are of varying heights, enabling the keys 25 to be disposed in banks or rows at different elevations, there being four banks in the present instance constituting the key board of the machine. The guide plate 24 may be provided with seats or supports 27 and 28 which respectively accommodate stop devices 29 and 30 extending transversely of the set of key levers and above and below the same. Said stop devices may be of any suitable construction and composition, and are so disposed that the stop 29 is engaged by the forward end portions of the key levers when they are in normal position while the stop 30 is adapted to arrest the key levers at the ends of their downward movements. Preferably the movement or stroke of the key levers is restricted so that they are arrested by the stop 30 before the associate type bars reach the printing point. However, a stop to limit the downward movement of the key levers may be dispensed with so far as some aspects of my present invention are concerned.

When a key 25 is suitably depressed its associate key lever 15 will be actuated, the movement continuing until said key lever is arrested by the stop 30, as shown by dotted lines in Fig. 1. The depression of the key lever will operate the associate sub-lever 13 which pivoting variably during its movement on the support 17 will press or push the associate link 10 forward, said link in turn actuating its type bar to swing it about the pivot 2 from normal position towards the platen. Restoring springs 31 are provided, one for each type action, each spring being hooked through a hole 32 in the associate sub-lever 13. The rear ends of the set of springs are anchored to an angular plate 33 fixed to the frame plate 23. Preferably each type bar is adapted near the end of the stroke, to contact with and operate on a spring-pressed universal bar 58 which is connected to and effective to actuate the letter feeding or escapement mechanism, said universal bar being arcuate in shape and arranged in a curved depression in the segment 3.

The type bars, it will be seen, are arranged in an arc of a circle and in an inclined position, whereas the key levers are horizontally disposed and are parallel with each other, the set of key levers being as a whole of greater width than the set of type bars. The latter moreover swing in radial planes while the key levers move in parallel vertical planes. By reason however of the flexibility of the connections afforded by the sub-levers 13, the type bars are actuated by impulses received substantially in their planes of movement. The rear arms of said sub-levers vary in length, increasing progressively from the middle to the sides of the system and most of them are bent or twisted back of their fulcrums so as to bring the upper end portions of said sub-levers substantially into the planes of the type bars to which they are connected. To compensate for the varying lengths of the rear arms of the sub-levers, their forwardly-extending horizontally-disposed arms also vary in length so that the extents of movements communicated to the type bars by their keys are substantially equal. While I have shown and described key levers and connections therefrom to the type bars of the general construction and arrangement disclosed in my said prior application Sr. No. 232,582, and while I prefer this construction and arrangement to any other at present known to me, it will be understood that for the purpose of the present invention such construction and arrangement may be varied and altered in any suitable way without departing from the main purpose of the invention which primarily has to do with type bar controlling means additional to the direct connections between the type bars and their keys.

In the present instance the means for controlling and governing the type bars so as to minimize the noise of printing operations resemble generally the devices shown in my aforesaid prior Patent No. 1,471,153. However, there are important differences between the two constructions which will be subsequently specified in detail. At this point attention may be called to the fact that in the prior construction there are three types on each type bar, necessitating a double shift, whereas in the present construction there are but two types on a bar and only a single case-shift is employed. This of course requires an increase in the number of type bars and a consequent compacting or condensing of the type bars and their operating mechanism in order to get them within the required space. Where, as in the present instance, a full set of type bars are employed, by reason of condensing of the type actions there is increased liability of interfering or clashing of the bars at or near their normal positions due in large measure to the tendency of the type bars to rebound from normal position after operation. One of the purposes of the present invention is to avoid the interferences or clashings of the type bars by preventing or minimizing rebound, this being accomplished by a novel

disposition and arrangement of parts as will hereinafter appear.

Each type bar is provided with its own individual controlling and governing means which is separate from and independent of the corresponding means of the other type bars. To support the set of means for the series of type bars there is preferably provided a segmental member or support 34, which is arranged forward of the type bar segment 3 and is parallel thereto. It will be understood that both of the segments or supports 3 and 34 are so mounted that they are always in the same unvarying relationship with each other, and if as is preferred the change of case is effected by shifting the platen as shown by the dotted line in Fig. 1, the segment 3 and the segment 34 will both be suitably secured to a stationary or non-shiftable part of the frame of the machine. The segment 34 is formed at its rear side with a series of radial kerfs or slots 35 each accommodating a hanger or bracket member 36 which is shown detached in Fig. 3. Each hanger is shaped generally like the letter Y, being provided with oppositely extending branches 37 and 38 and a stem portion 39. The stem portions of the brackets are seated or accommodated each in one of the slots 35 and so that the under side of the root portion of the branch 37 may rest or seat on the upper curved surface of the segment 34. A curved washer plate 40 covers the rear openings of the slots 35 and abuts against the rear edge of the stems 39. The washer plate is secured in place by headed screws 41, and the construction is such that when the screws are tightened their reaction through the washer on the stems 39 effectively clamps the hangers 36 in fixed relationship with the segment 34. Mounted on each hanger 36 are the controlling or governing means or devices for one of the type bars, said means comprising a two-part link 42 pivotally connected at one end at 43 to the associate type bar about midway of its length. While a unitary link may be used I prefer to employ for constructional reasons a pair of such links in each instance, the pair being arranged in parallelism and connected at opposite faces of the type bar by the pivot pin or rivet 43. The opposite ends of the links 42 are pivotally connected by a pin or rivet 44 to a single link member 45 and embrace loosely the opposite face thereof. Said link member 45 is pivotally connected at 46 with the arm 37 of the bracket 36. Preferably as appears from Fig. 3 the bracket arm is curved or slotted as shown at 47, the link 45 being seated loosely in this slot, the pivot pin 46 bridging the slot and passing through the link 45. Said link has an extension 45^a to which is pivotally connected at 48 the stem portion 49 of a weighted member which further comprises an enlarged end or weight proper 50 angularly disposed to the stem. Preferably the stem is slotted to loosely embrace the extension 45^a, the pivot pin 48 bridging the slot in the stem. The controlling means for each type bar further includes a link which preferably comprises two parallel members or elements 51 as will be best seen from Fig. 4. The members 51 are held or spaced apart at their lower ends by a shouldered stud or cross pin 52, and at their upper ends by a pivot pin 53 which passes through the member 49, 50 at the angular junction of the stem and the weight, and serves pivotally to connect the weight-member with the two-part link 51. Said link is pivotally connected at 54 with the arm or branch 38 of the bracket 36. The two-part link 51 loosely embraces the bracket itself and moves freely over the bracket and also over the parts 49, 45 and 42 of the connecting means or devices during the operation of the type bar. Preferably the pin or stud 52 is adapted to contact with a stop face 55 on the branch 88 when the parts are in operated position (Fig. 3). The end portion of said branch is also formed with a seat or depression 56 which accommodates a rest or stop 57 of fibre, felt or other suitable material against which the back of the type bar rests when parts are in normal position.

In normal position the parts of the controlling devices are nested and interseated as shown in full lines in Fig. 1. When one of the type bars is actuated by its associate key 25 the type bar will be swung rapidly about its pivot towards the printing point with an accelerated movement, and the parts are so constructed that when the key lever is arrested by the stop 30 as shown by dotted lines in Fig. 1 the type bar will then be in the vicinity of the printing point or approximately in the dotted line position designated as 1^a, Fig. 1. During the swing or movement of the type bar to this position the controlling mechanism will be extended, this controlling mechanism comprising in effect two pairs of toggles, one pair constituted by the members 42 and 45, and the other pair constituted by the members 49 and 51. When the type bar has reached the dotted line position 1^a these two pairs of toggles will be nearly straight, and the completion of the type bar movement, that is, the movement of the type bar from the 1^a position to the printing position indicated at 1^b, results in a substantial straightening of the two sets of toggles. It will be apparent that the movement of the type bar from the 1^a to the 1^b position will be independent of the key lever which remains motionless in contact with the stop 30 during the said type bar movement, this movement being due to the type bar's own momentum and to the action of the weight member 49, 50 which thus expends the energy acquired and stored in it previously by the operation of the key lever. It will be seen that under the operation of the

key lever said member will be swung from its normal full line position in Fig. 1 to the dotted line position designated as 50^a (Fig. 2) and during the further movement of the type bar the energy stored in the weight 50 will, during movement from the 50^a to the printing position designated as 50^b in Fig. 2, be effective substantially to control the type bar, resulting in a slowing down of the type bar so that its contactive engagement with the platen is substantially without noise. The parts are so arranged and disposed that the movement of the type bar under impulse of its printing key will be an accelerated one, this initial accelerated movement being participated in by the weight 50. As the weighted member is thus moved energy is stored therein so that when the key lever is arrested said weighted member will constitute a further actuating device for the type bar. As the weighted member continues its swinging movement, the links 42, 45 will be extended so that the toggle constituted thereby will be nearly or substantially straight at the moment of printing contact and the leverage of the weighted member on this toggle is further augmented by the extension into substantial parallelism of the linkage 49 and 51, these constituting in effect a second toggle. The printing stroke of the type bar is silently limited by the extension of the links 42 and 45 bringing the pivotal points 43, 44 and 46 into substantial alignment and the corresponding substantial alignment of the points 53, 48 and 54 will prevent overthrow of the links 42 and 45. The stops 52 and 55 will operate to arrest the links 49 and 51 should the points 53, 48 and 54 be brought into full alignment, the construction being such that the stop devices will act to prevent undue movement or overthrow of the actuating member or weight 49, 50 and undue movement of the connected toggles or linkages. The construction is such that the weighted part 49, 50 constitutes an actuating element for the type bar and exerts pressure on the type bar to cause it to print effectively in spite of its practically noiseless contactive engagement with the platen. The parts will be restored to normal position by the restoring springs.

While the linkage construction in itself does not differ substantially from that disclosed in my aforesaid Patent 1,471,153 the two sets of linkages 42 and 45 and 51 and 49 are so related to each other and to the type bar, which itself acts as a link that important advantages are obtained over the prior construction. One of these advantages will be most readily seen from considering the action of the weighted member 49, 50 during the return movement of the parts. In this view the link 42 and that part of the type bar between the points 43 and 2 while in appearance somewhat resembling a toggle, do not in fact constitute a toggle. When the parts are in printing position (Fig. 2) it will be observed that the two members in question are at a slightly acute angle. As the parts move back from printing to normal position, these members will be gradually straightened and will reach a straight line position just prior to arrival at normal position as shown by dotted lines in Fig. 1. At this moment the weighted member 50 will be in the dotted line position designated as 50^c, Fig. 1. Thereafter during the completion of the return movement, the link 42 and the lower part of the type bar will be broken in the opposite direction, resulting in a lifting of the weight 50 against the force of gravity from the dotted line position 50^c to the normal or full line position in Fig. 1. That is to say, such members pass to and then beyond the straight line position in which latter position the members are arrested. This lifting of the weight and the consequent absorption of energy will slow down the type bar and cause it so to contact with its arresting means 57 as to minimize the rebounding tendency, thus reducing liability of clashing with a subsequently actuated type bar or type bars should such bar or bars happen to be those lying adjacent in the basket to the first actuated type bar.

There is a further important advantage in the novel arrangement and disposition of the parts and that is that at the initial movement of the type bar under impulse of its printing key the connected weight 50 will first move oppositely or from the full line position to the dotted or 50^c position in Fig. 1. In other words, the weight will have the force of gravity to assist in starting it, thereby reducing the power necessary to be applied initially to the printing key.

It will be observed that by my present invention there is provided in combination, a platen, a key lever, a pivoted type bar, operative connections between the key lever and the type bar, an actuating element or weight, and a linkage connecting it with the type bar whereby said element will be caused to move in a direction opposed to the force of gravity; that said actuating element provides means to store energy during the first stage of the type bar stroke and to expend such energy thereafter to insure the completion of the proper printing stroke of the type bar, the type bar slowing down so as to strike the platen lightly and to be pressed hard enough to cause an effective printing operation; that the actuating element is associated with means affording movement opposite from the type bar at one stage of the type bar operation; that thereafter during the operation said element moves in a direction corresponding with that of the type bar; and that while the type bar moves continuously in one direction the actuating element or weight is adapted to move in opposite directions,

changing its course of movement during the type bar stroke.

Various changes may be made without departing from my invention.

What I claim as new and desire to secure by Letters Patent, is:—

1. The combination of a platen, a key lever, a pivoted type bar, operative connections between said key lever and said type bar to effect initial movement of the type bar towards the platen, a weighted actuating element, and a linkage connecting said element with the type bar and so disposed that at the final stage of return movement of the type bar the weighted actuating element will be moved in a direction opposed to the force of gravity.

2. The combination of a platen, a depressible key lever, a pivoted type bar, operative connecting means between said lever and said bar to effect movement of the type bar upon initial depression of the key lever and to permit continued movement of the type bar independently of the key lever, and means separate from but operatively connected with the type bar to acquire and store energy upon said initial movement of said type bar and to expend such energy thereafter to complete the printing stroke of said type bar, said means comprising a weight which is assisted in its initial movement by the force of gravity.

3. The combination of a platen, a key lever, a type bar, a printing key, connections between the printing key and the type bar, a separate weighted actuating element, and means including a toggle connecting said weighted element with the type bar and effective to permit movement of said weighted element under the force of gravity at one stage of the printing movement of the type bar.

4. The combination of a platen, a printing key lever, a type bar, operative connections between said key lever and said type bar, a weighted actuating element, and operative connections between said weighted element and said type bar including a toggle, said connections affording movements of said type bar and of said weighted actuating element in opposite directions relatively one to the other.

5. The combination of a platen, a printing key lever, a type bar, operative connections between said key lever and said type bar, a separate weighted actuating element, and operative connections between said weighted element and said type bar including a toggle, said connections causing movements of said type bar and of said weighted actuating element in opposite directions relatively one to the other during the initial stage of the type bar stroke.

6. The combination of a platen, a printing key lever, a type bar, operative connections between said key lever and said type bar, a weighted actuating element, and operative connections between said weighted element and said type bar, said connections causing movements of said type bar and of said actuating element in opposite directions relatively one to the other during both the initial stage of the key lever depression and also during the final stage of the return movement of the type bar.

7. The combination of a platen, a key lever, a type bar, operative connections between said key lever and said type bar to effect initial movement of the type bar towards the platen, a weighted actuating element separate and distinct from the type bar and operative connections between said weighted element and said type bar effective to afford an initial movement of said weighted element away from the platen, said intermediate connections including a toggle.

8. In a front strike typewriting machine, the combination of a platen, a key lever, a type bar, operative connections between said key lever and said type bar to effect initial movement of the type bar in an upward direction, a weighted actuating element separate from and movable relatively to the type bar, and operative connections between said weighted element and said type bar effective to afford an initial downward movement of said weighted element from its position of rest.

9. The combination of a platen, a pivoted type bar, key-operated actuating means for the type bar, and separate controlling means for the type bar comprising a weight and a link, said link and said type bar being arranged to constitute a toggle which breaks in opposite directions at different stages of the type bar stroke.

10. The combination of a platen, a type bar, key operated actuating means for the type bar, and separate controlling means for the type bar comprising a weight and a link, said link and said type bar being arranged to constitute a toggle which is normally broken and which is adapted to straighten at an intermediate stage of the type bar stroke.

11. The combination of a platen, a pivoted type bar, key operated actuating means for the type bar, and controlling means for the type bar comprising a weight and a link, said link and said type bar being arranged to constitute a toggle which is normally broken and which is adapted to straighten at an intermediate stage of the type bar stroke and thereafter to break in the opposite direction whereby said weight is caused to move in opposite directions while the type bar is moving continuously in one direction.

12. The combination of a platen, a type bar, key operated actuating means for the type bar, a link connected to the type bar between its ends and constituting therewith a normally broken toggle which straightens at

590

an intermediate stage of the type bar stroke, a weight, an arm or link having a fixed pivot and to which both said first named link and said weight are pivotally connected, and an additional link having a fixed pivot at one end and being pivotally connected at its opposite end to said weight.

13. The combination of a platen, a type bar, key operated actuating means for the type bar, a link having one end connected to the type bar, a weight, a link having a fixed pivot and to which both said first named link and said weight are pivotally connected, an additional link having a fixed pivot at one end and being pivotally connected at its opposite end to said weight, and stop devices cooperating with said last recited link to prevent overthrow of said weight, the construction and arrangements of said parts being such that the force of gravity of said weight assists the initial movement of the type bar from its position of rest.

14. The combination of a platen, a type bar, key operated actuating means for the type bar, a link connected to the type bar about midway between its ends and constituting therewith a normally broken toggle which straightens at an intermediate stage of the type bar stroke, a weight, a link having a fixed pivot and to which both said first named link and said weight are pivotally connected and an additional link having a fixed pivot at one end being pivotally connected to said weight at its opposite end, a stop carried by said last recited link, and a stationary stop, said stops cooperating to prevent overthrow of said weight.

15. The combination with a type bar, and controlling means for causing said type to be applied with a pressure imprint in substantially a noiseless manner, said controlling means including a weighted member effective on the type bar and the force of gravity of which is exerted to aid in moving the type bar from its normal position and also is exerted to return the type bar from printing position after an imprint has been effected.

16. The combination with a type bar, and controlling means for causing said type to be applied with a pressure imprint in substantially a noiseless manner, said controlling means including a toggle, and a weighted member effective on said toggle and the force of gravity of which is exerted to straighten the toggle when the parts are in normal position.

17. The combination with a type bar, and controlling means for causing said type to be applied with a pressure imprint in substantially a noiseless manner, said controlling means including a toggle, and a weighted member effective on said toggle and the force of gravity of which is exerted to straighten the toggle when the parts are in normal position, the force of gravity of said weighted member also being exerted to break the toggle from a substantially straight line position after an imprint has been effected.

Signed at Middletown, in the county of Middlesex and State of Connecticut, this 7th day of February, A. D. 1928.

GEORGE G. GOING.

591

May 9, 1933. G. G. GOING 1,908,140

TYPEWRITING MACHINE

Filed Jan. 10, 1929 5 Sheets-Sheet 1

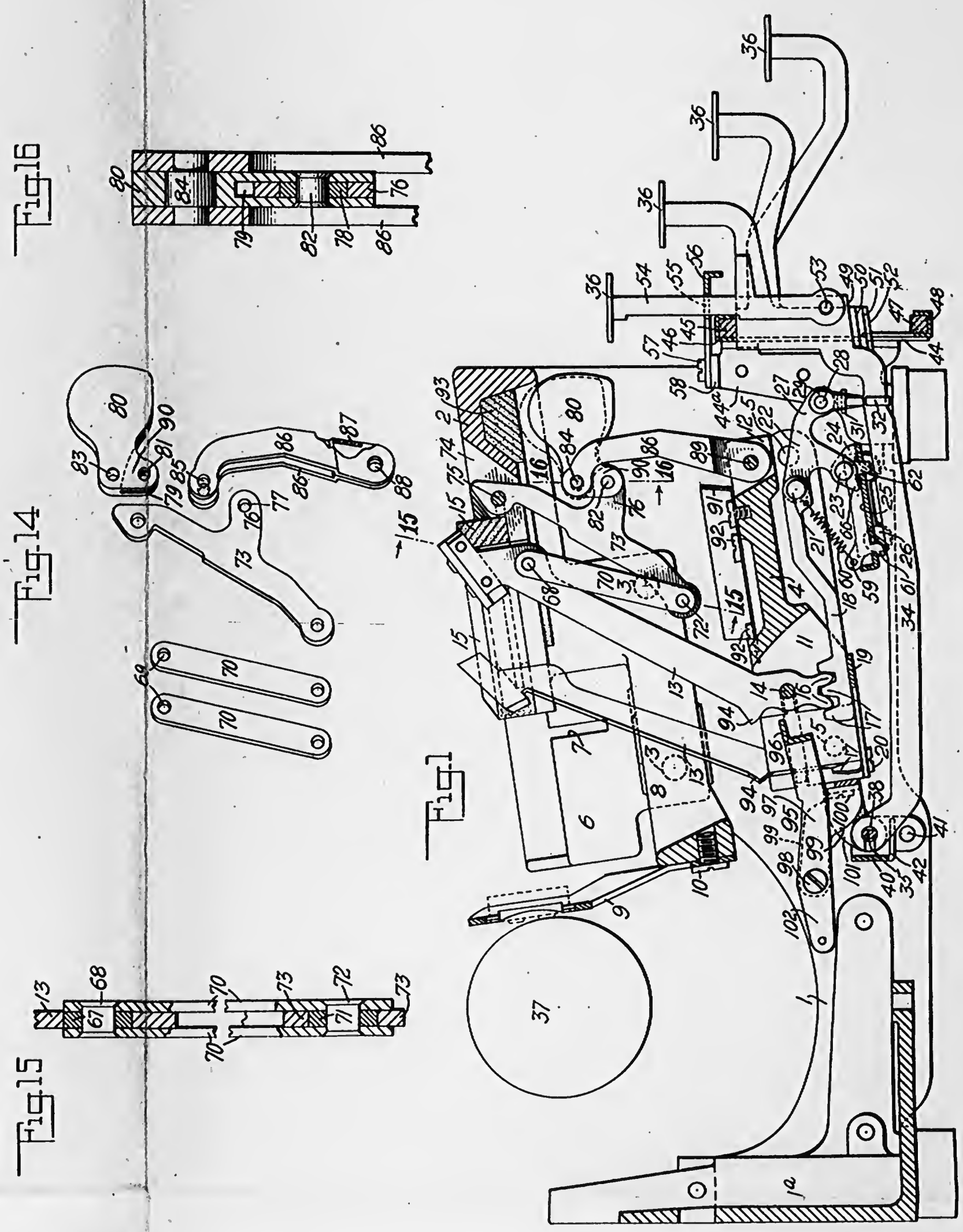

WITNESSES

Elsie J. Duggan

Charles E. Smith

INVENTOR

G. G. Going

BY Barton R. Bean, Jr.

ATTORNEY

591

592

May 9, 1933.

G. G. GOING

1,908,140

TYPEWRITING MACHINE

Filed Jan. 10, 1929

5 Sheets-Sheet 2

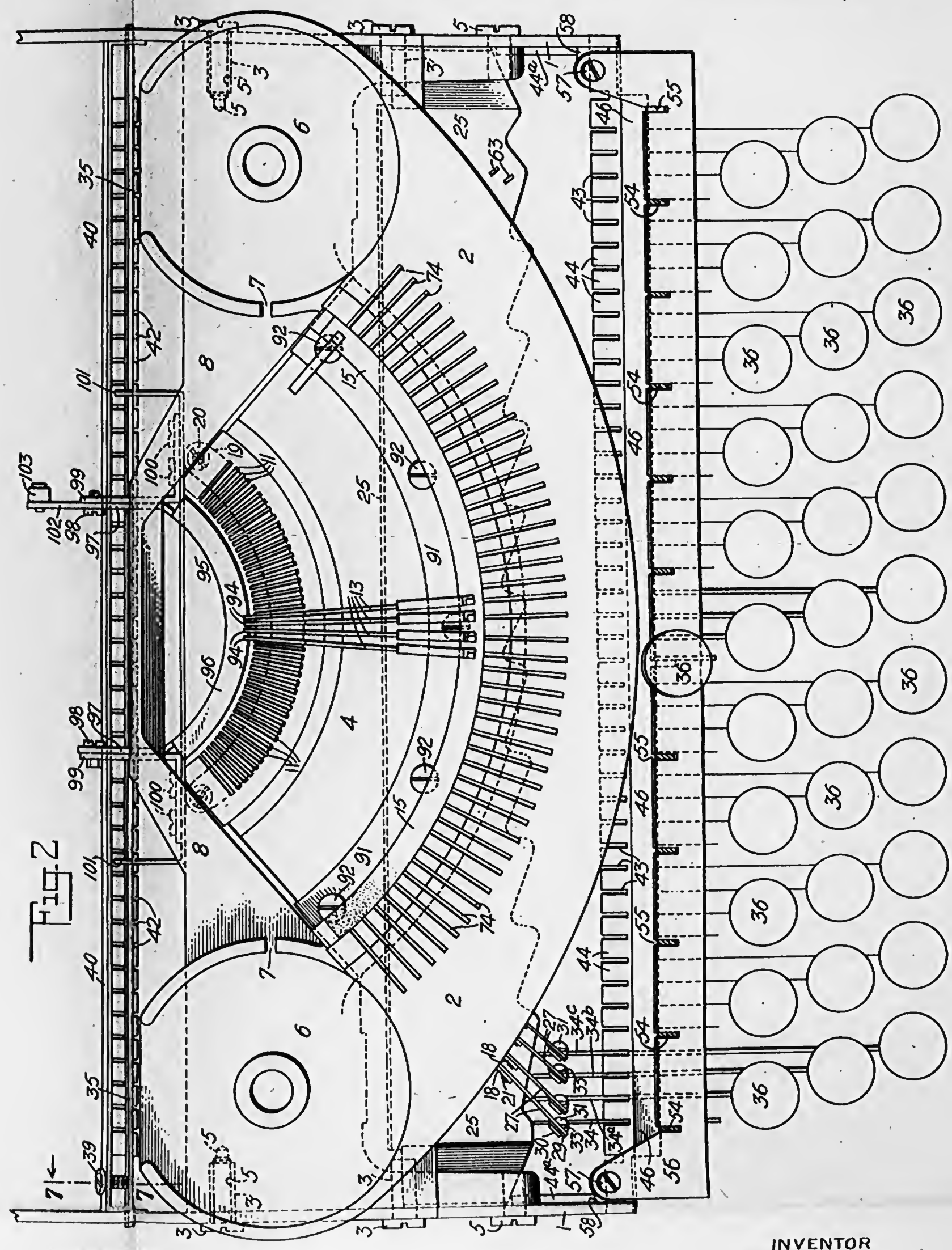

Fig. 2

WITNESSES

Essie J. Duggan

Charles E. Smith

INVENTOR

G. G. Going

BY Barton A. Bean, Jr.

ATTORNEY

592

593

May 9, 1933.

G. G. GOING

1,908,140

TYPEWRITING MACHINE

Filed Jan. 10, 1929

5 Sheets-Sheet 3

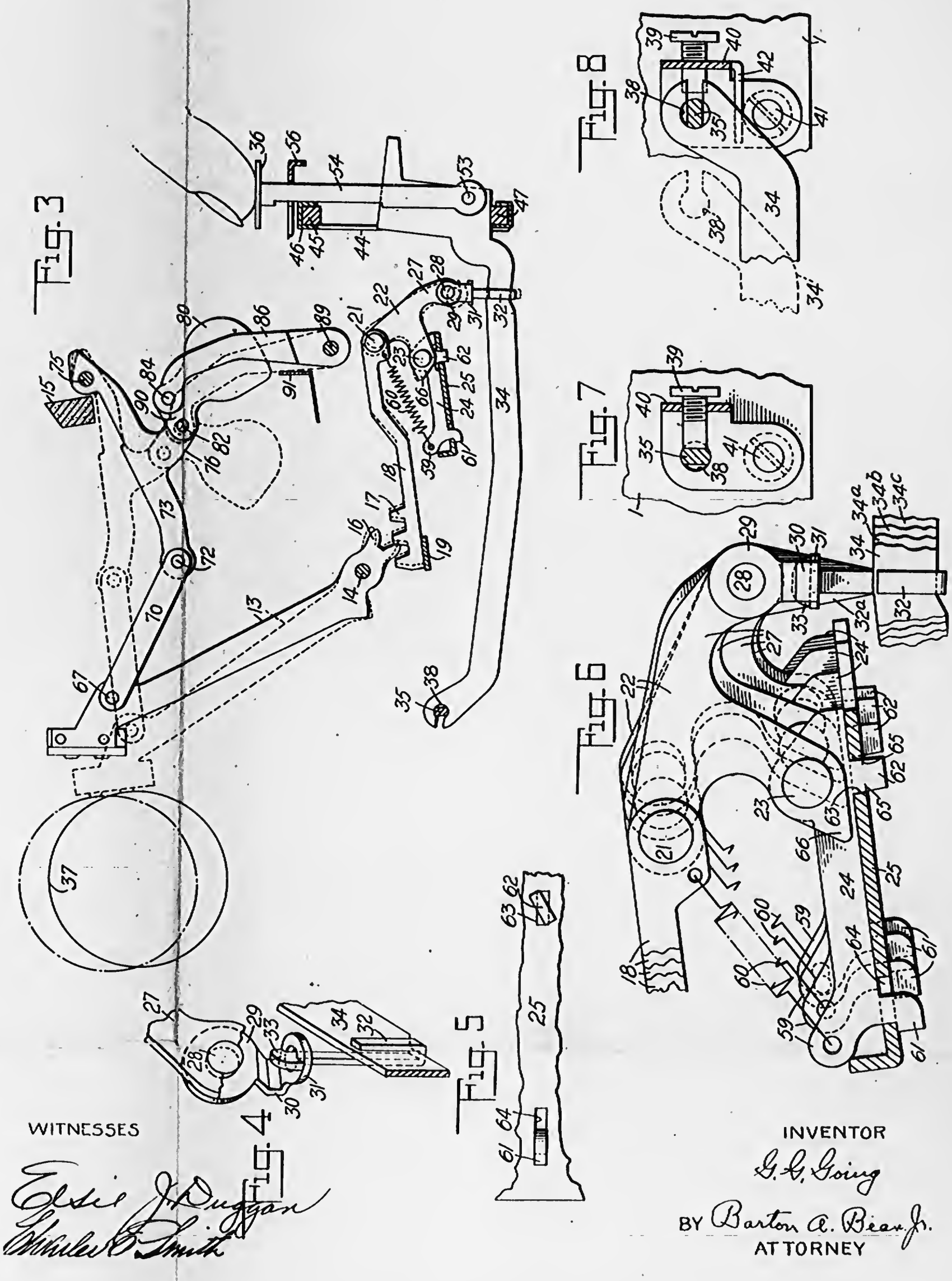

WITNESSES

Elsie J. Duggan

Wm. E. Smith

INVENTOR

G. G. Going

BY Barton A. Bear Jr.

ATTORNEY

593

594

May 9, 1933. G. G. GOING 1,908,140

TYPEWRITING MACHINE

Filed Jan. 10, 1929 5 Sheets-Sheet 4

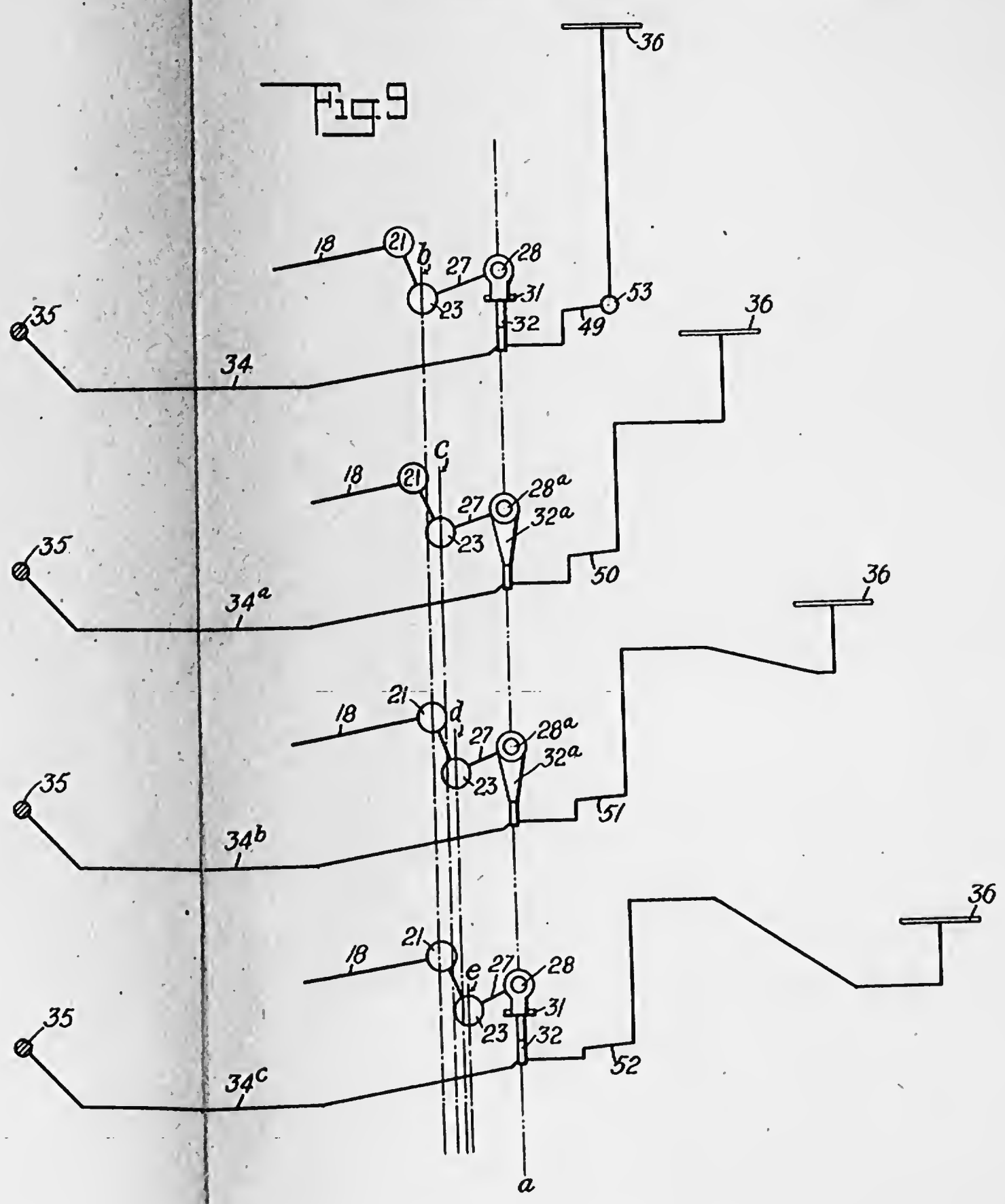

WITNESSES

Elsie J. Duggan

Charles E. Smith

INVENTOR

G. G. Going

BY Barton A. Bean Jr.

ATTORNEY

594

595

May 9, 1933. G. G. GOING 1,908,140

TYPEWRITING MACHINE

Filed Jan. 10, 1929 5 Sheets-Sheet 5

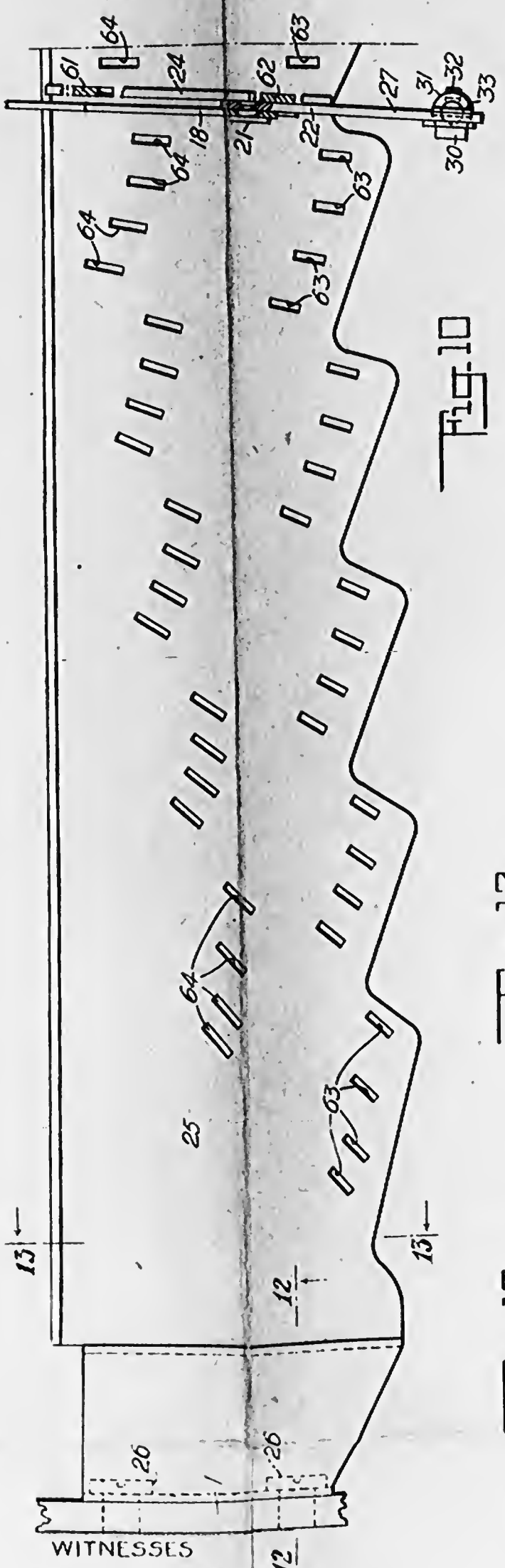

Fig. 10

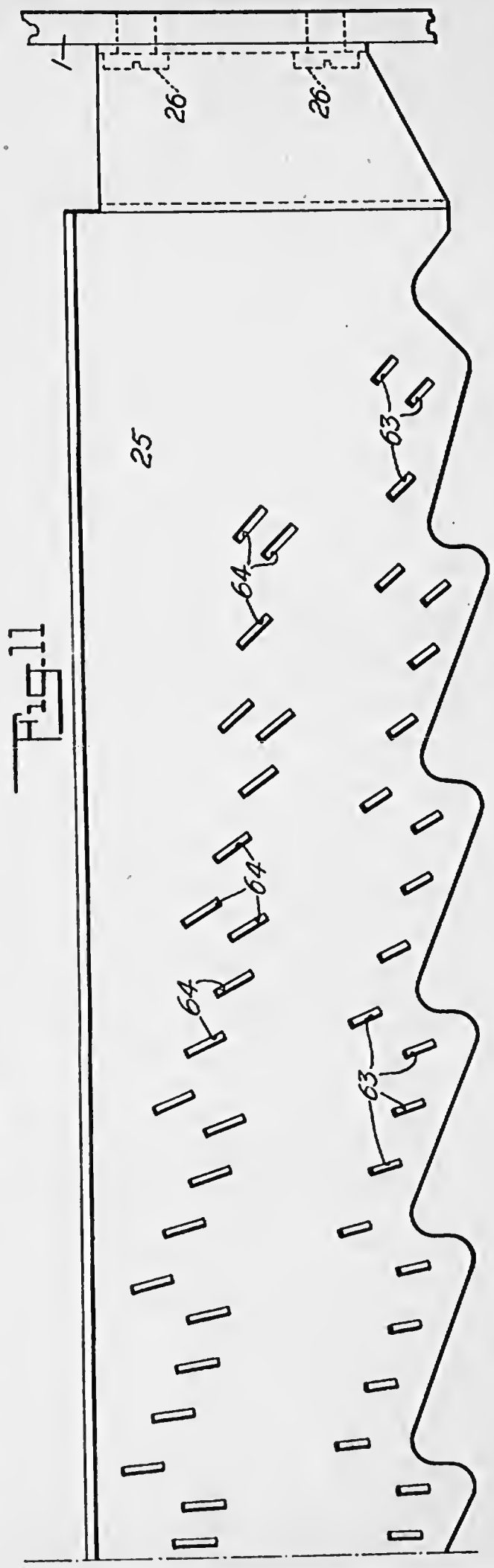

Fig. 11

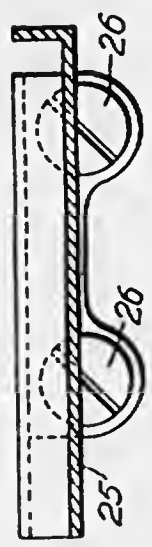

Fig. 13

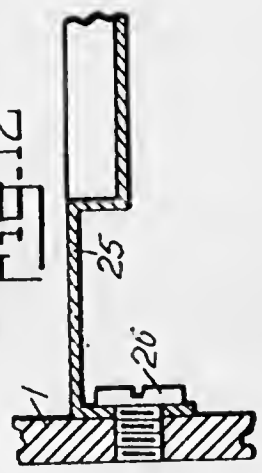

Fig. 12

WITNESSES

Elsie J. Duggan

Charles E. Smith

INVENTOR

G. G. Going

BY Barton A. Bean Jr.

ATTORNEY

595

Patented May 9, 1933 1,908,140

UNITED STATES PATENT OFFICE

GEORGE G. GOING, OF GLENBROOK, CONNECTICUT, ASSIGNOR TO REMINGTON TYPEWRITER COMPANY, OF ILION, NEW YORK, A CORPORATION OF NEW YORK

TYPEWRITING MACHINE

Application filed January 10, 1929. Serial No. 331,534.

My invention relates to typewriting machines and more particularly to type actions thereof and to the system of type action and associated parts.

One of the main objects of my invention, generally stated, is to provide an easy operating, speedy, comparatively simple and yet highly efficient type action which is noiseless, or substantially so, in its operation and may be manufactured at a comparatively small cost.

A further object of the invention is to provide a type action of the character specified which by reason of its compactness lends itself to the production of a small compact machine such as is required for a portable typewriter.

A still further object of the invention is to provide an eighty-eight character machine of the kind specified and in which a standard four-bank keyboard with a single case shift may be employed.

To the above and other ends which will hereinafter appear, my invention consists in the features of construction, arrangements of parts and combinations of devices set forth in the following description and particularly pointed out in the appended claims.

In the accompanying drawings, where like reference characters indicate corresponding parts in the different views:—

Fig. 1 is a full sized, vertical, fore and aft, central sectional view of a typewriting machine, (with parts omitted), embodying features of the present invention.

Fig. 2 is a top plan view of the same.

Fig. 3 is a skeletonized side view of one of the central type actions shown in actuated position.

Fig. 4 is an enlarged, detail, perspective view showing one of the connecting devices between a key lever and its associated sub-lever.

Fig. 5 is a fragmentary, bottom plan view showing a portion of the supporting plate and the fastening devices of one of the sub-lever hangers.

Fig. 6 is an enlarged, detail, fragmentary, side view, with parts in section, of a group of four sub-levers and associated parts.

Fig. 7 is an enlarged, detail, sectional view of the pivot rod for the key levers and associated parts, the section being taken on the line 7—7 of Fig. 2 and looking in the direction of the arrows at said line.

Fig. 8 is a like view of the same with a key lever, showing the method of introducing the key levers in place.

Fig. 9 is a diagrammatic side view of four key levers of different length and some of the actuating connections associated therewith.

Figs. 10 and 11 taken together represent, on an enlarged scale, the supporting plate for the sub-levers, one of the sub-levers and its hanger being indicated in Fig. 10.

Figs. 12 and 13 are sectional views of said supporting plate, the sections being taken respectively on the lines 12—12 and 13—13 of Fig. 10; the arrows at said lines indicating the directions from which the sections are viewed.

Fig. 14 shows in perspective and detached elements of the type bar controlling means.

Fig. 15 is a fragmentary, enlarged, detail sectional view taken on the line 15—15 of Fig. 1 and looking in the direction of the arrows at said line.

Fig. 16 is an enlarged, detail, fragmentary sectional view taken on the line 16—16 of Fig. 1 and looking in the direction of the arrows at said line.

The present invention may be said to be in the nature of an improvement on the construction disclosed in my Patents Nos. 1,471,152 and 1,471,153 dated Oct. 16, 1923, with the hereinbefore mentioned objects in view.

It is desirable, ordinarily, in machines of the so-called noiseless type, to make the stroke of the type bar as short as possible because, for one reason, the longer the stroke of the bar the more apt, ordinarily, there is to be a production of noise in the operation of the type actions. It also, ordinarily, is true that the longer the stroke of the type bar the longer is the throw of the momentum accumulator, where one is employed,

5 46

and this also is apt to result in the production of more noise in the operation of the type action. Therefore, while it is desirable, ordinarily, for the above and other reasons, to provide a type action with a type bar having a very short stroke, it is not always feasible to provide such a type action. Thus, for instance, where a comparatively large number of actions in a visible writing machine are to be employed, as for example, where forty-four type actions are included so that an eighty-eight character machine with a standard four-bank keyboard and a single case shift may be produced, it is essential that the distance between the printing point and the type heads, when the latter are at rest, shall be greater than where fewer type actions are included in the machine. This is necessary in order that the required number of type actions may be included within a comparatively small segmental space and yet afford sufficient clearance between the parts of the different actions.

In accordance with my present invention I am enabled to mount forty-four type actions, with two types on each bar, in the machine; to provide a single case shift, (in the present instance of the platen) with a standard four-bank keyboard, and with the type faces located about two and five-eighths inches from the printing point and moving through about 62°. This I am enabled to accomplish while at the same time providing a noiseless, or substantially noiseless, type action which is comparatively inexpensive to manufacture, is very light in its touch, is rapid and highly efficient in use and is so compact in construction as to enable me to construct a small, compact and light portable typewriter embodying the invention. It should be understood, however, that the invention is not restricted to embodiment in a portable machine but may be employed in comparatively large standard machines.

In the drawings there is represented so much of a portable typewriting machine as is necessary to arrive at an understanding of my invention in its embodiment therein, Figs. 1 and 2 being a full size representation thereof.

The frame of the machine comprises side plates 1 which are firmly united by a rear cross plate on bar 1ª, two intervening segments and other parts to be hereinafter described. The uppermost of these segments is designated as a whole by the reference numeral 2 and is secured to the side plates by screws 3, whereas the lower segment is designated as a whole by the reference numeral 4 and is secured to the side plates by screws 5.

The upper segment 2 is formed with ribbon spool pockets 6 therein having slots 7 in the inner walls for the passage of the ribbon. A rearwardly extending integral yoke-like portion 8 is formed on the segment 4 to provide a support for a type guide 9 secured to the yoke by screws 10. The segments 2 and 4 and side plates 1 and rear cross plate 1ª are preferably made of aluminum or an alloy thereof.

The lower segment 4 is a double segment having a series of radially arranged saw kerfs or guide slots 11 at the rear concave edge thereof, and a second series of radially disposed saw kerfs or guide slots 12 at the forward convex edge thereof. Companion slots 11 and 12 are arranged in the same radial plane, all of said planes converging just forward of the printing point.

Segmentally arranged type bars 13 are pivoted in the radial slots 11 on a pivot wire 14 to swing through approximately 62° to the printing point; the types when at rest in the basket being about two and five eighths inches from the printing point. This provides sufficient room in the type baskets in which to mount forty-four type bars and yet provides sufficient clearance between them. Each type block carries two types formed the same as in the No. 6 Remington Noiseless machine and each type block coacts with the type guide 9 that has lateral guide faces but is ineffective to control the type block for up and down displacement; the pivot of the type bar being relied upon for this purpose.

Each type block normally rests against a segmental pad or type rest 15 supported on top of the segment 2.

From an inspection of Fig. 1 it will be seen that the plane of the pivot wire 14 is at an angle of 90° to a plane passing tangentially of the platen through the printing line. By constructing and arranging the parts in the manner herein shown and described it is possible to provide type bars without lateral bends therein at the sides of the system, each type bar throughout the system being a straight type bar or a bar devoid of any lateral bend therein. Due to this fact I am enabled to employ a greater number of type bars in a given space than is possible in a construction wherein the type bars at the sides of the system are bent laterally, as is usually the case.

The depending portion of the heel of each type bar is provided with downwardly extending teeth 16 received in the associated guide slot 11 and meshing with upwardly extending teeth 17 on a companion actuating member in the nature of a slide 18. Each slide is received and works radially in the companion guide slot 11 and is supported in place therein by a segmental supporting strip 19 detachably secured to the bottom of the segment 4 by screws 20. From what has been said it will be under-

597

stood that slides 18 have a radial arrangement that corresponds to the slots 11 and the type bars received therein.

The forward end of each slide 18 is pivoted at 21 to one arm of a three-arm angular sub-lever 22. A depending arm of this lever is pivoted at 23 to a hanger 24 mounted on a supporting plate 25 which at its ends is secured by screws 26 to the side plates 1 of the frame. The forwardly extending arm 27 of each sub-lever is pivoted at 28 to one member 29 of a two-part swivel. This member is preferably made of sheet metal with an off-set bend or goose neck 30 therein and a substantially horizontally disposed eye or apertured portion 31. The other member of the swivel comprises a substantially U-shaped connecting device 32 one arm of which is continued up and passes through the eye 31 above which said arm is provided with a substantially T-shaped cross-head 33. The lower end portion of the member 32 provides an open-mouth hook, loop or pocket in which the companion key levers 34, 34[a], 34[b], or 34[c] is adapted to seat itself and provide for a movement of the loop independently of its key lever as indicated in dotted lines in Fig. 3, for purposes which will hereinafter appear.

The key levers have a parallel, or substantially parallel, arrangement and extend fore and aft of the machine, whereas the sub-levers are radially disposed, each sub-lever working in the same radial plane as the companion slide 18 and type bar 13. It follows, therefore, that the key levers and their companion sub-levers have different angular relations one to the other from the center to the sides of the system, as will be understood from a consideration of Fig. 2, the sub-lever for each terminal type bar being disposed at the greatest angle to its companion key lever.

The swivel connections described above for connecting the key levers and sub-levers are in the nature of self finding connections which enable them to accord and not interfere with the varying angular relations between the key lever and sub-lever which they connect, depending on their location in the system.

For the two central type actions of the system the use of swivels to connect the key levers and sub-levers is unnecessary as such levers in each instance are in the same plane, and not in diverging planes, as in the other type actions of the system. Therefore, for these two central type actions I employ loops 32[a] (see Fig. 9) which are like the previously described members 32 except that the long arm of the loop is pivoted directly to its sub-lever as indicated at 28[a] in Fig. 9.

It will be seen from an inspection of Figs. 2 and 9 that the forward ends of the arms 27 of the sub-levers are all arranged in a straight line across the machine, as indicated by the dotted line *x* in Fig. 9. It also will be observed that plane of each sub-lever 22 intersects the plane of its companion key lever, and that the arm 27 of each sub-lever terminates directly above its associated key lever. Referring more especially to Figs. 2 and 4 it will be seen that each swivel 29, 32 unites its associated key lever and sub-lever on the line where the planes of the two levers intersect so that there is an avoidance of all side stress in the actions throughout the system.

The key levers are all mounted at their rear ends to turn on a pivot rod 35, are of four different lengths and provided with keys 36 arranged in four banks to accord with the arrangement of a standard four-bank keyboard with a single case shift, the platen 37 being the case shifted element in the present instance. The key levers of different lengths are designated by different reference characters because they differ somewhat and require to be separately described.

In the present instance all of the key levers are provided with open key-hole slots 38 by which they may be moved endwise onto the pivot rod 35 when the latter is turned in its bearings so as to present the slabbed-off sides of the pivot rod in register with the open-mouth of the key-hole slots in the key levers, as shown in Fig. 8. When the key levers are all in place on the pivot rod the latter is given a quarter turn as shown in Fig. 7, thereby providing a pivot bearing for the key levers and preventing their removal from the rod. A set screw 39 may be threaded into position to bring its inner end to bear against one of the flat faces on the rod (see Fig. 7) and thereby prevent it from accidentally turning in its bearings. The screw 39 is threaded into the body portion 40 of a comb plate secured by screws 41 to the side plates 1 of the frame. A forwardly extending portion of the comb plate is slotted at 42 to receive the rear end portions of the key levers and maintain them spaced apart at the rear ends. The key levers at their forward ends also pass through guide slots 43 in a comb plate 44 secured at its ends to brackets 44[a] which in turn are secured by screws to the side plates 1.

The upward motion of the key levers to normal position is limited by a pad 45 supported in a metal containing trough or supporting member 46 attached to the brackets 44[a]. The downward motion of the key levers is arrested by a pad 47 supported in a trough-like metal support 48 secured to the brackets 44[a].

In order to provide for a uniform leverage throughout the system I construct and arrange the parts as follows:

598

Referring more particularly to Fig. 9 it will be understood that, as hereinbefore explained, the key levers are of four different lengths, those with keys in the uppermost or first bank being the shortest and those with keys in the lowermost or fourth bank being the longest, and that the connecting links or swivels between the key levers and sub-levers are all arranged in a straight line *a* extending transversely of the machine. In order to compensate for the varying lengths of key levers I vary the length of arms 27 of the sub-levers 22. This will be understood from a consideration of the dotted lines *b*, *c*, *d* and *e* in Fig. 9 from which it will be seen that the shortest key lever 34 is connected to a sub-lever having the longest arm 27, whereas the longest key lever 34^c is connected to a sub-lever having the shortest arm 27. The key levers 34^a and 34^b likewise are connected to sub-levers having arms 27 of lengths properly proportioned to accord with the lengths of the key levers to which they are connected. In this manner the leverage throughout the system is made uniform.

In order to provide for a uniform dip of the printing keys I provide variably arranged contacts or stop faces on the key lever for cooperation with the stop pad 47. This will be understood from a consideration of Figs. 1 and 9 from which it will be seen that the stop faces or contact edges 49, 50, 51 and 52 on the key levers are arranged so that they are at progressively greater distances from the arresting pad 47 when the parts are in normal position, the contact edge 49 for the shortest key lever being located furthest from the arresting pad and the contact edge 52 for the longest key lever being normally closest to the arresting pad. By these means the printing keys 36 will receive a uniform extent of dip throughout the keyboard.

I prefer to make each of the key levers 34^a, 34^b, and 34^c from a single integral piece, but prefer to make each of the key levers 34 which carries a key for the first or upper bank differently. Thus, each key lever 34 has pivoted thereto, at 53, a key stem 54 carrying a key 36 at its upper end. Each key stem 54 is received and works in a guide slot 55 (see Fig. 2) provided in one edge of a guide plate 56 secured by screws 57 on ears 58 of the brackets 44^a. The side and forward walls of the slots 55 coact with the key stems to hold them against sidewise and forward movement, whereas the front wall of the pad support 46 coacts with the rear edges of the key stems to prevent backward movement thereof. The key stems 54 are thus guided for vertical movement to prevent the keys of these shortest key levers from tilting in the actuation thereof.

I have hereinbefore indicated that notwithstanding the arms 27 of the sub-levers are of different lengths, the front ends thereof are in alignment across the machine. It becomes necessary therefore not only to locate the sub-levers in different radial planes, but also at different distances fore and aft of the machine depending on the lengths of the arms 27. This will be understood from a consideration of Figs. 6 and 9 and from the varying distances of the pivots 23 of the sub-levers with reference to the dotted line *a* in Fig. 9. Therefore, the hangers 24 are located in various positions on the supporting plate 25 in a manner which will now be indicated.

It will be seen that each hanger 24 has a rearwardly extending apertured ear 59 to which is connected one end of a contractile returning spring 60, the opposite end of said spring being connected to the associated slide 18. This spring constitutes the only returning spring for the entire type action. Each hanger has two depending projections 61 and 62, the projection 61 being a hook-like extension. The supporting plate 25, as indicated in Figs. 10 and 11, is provided with forward apertures 63, and rear apertures 64, companion apertures 63 and 64 for each hanger being disposed in a radial plane corresponding substantially to the plane of the associated hanger 24, sub-lever 22, slide 18 and type bar 13. Each aperture 64 is of a length which will receive the projection 61 of the companion hanger and permit it to be shifted lengthwise and rearward to bring the bill of the hook beneath the under side of the supporting plate and interlock therewith, as shown in Fig. 6. The forward end of the hanger may then be lowered permitting the projection 62 to enter its aperture 63 in which it has a snug fit that prevents any forward shifting of the hanger that would result in releasing the projection 61 from interlocking engagement with the supporting plate. After the hanger is introduced into position in the manner indicated the lower end of the projection 62 is given a slight twist with the aid of a pair of pliers, as indicated in Fig. 5, to lock the hanger against accidental detachment. The metal from which the hanger is made is such as to permit this bending or twisting of the projection 62 as explained. I prefer to slightly score or sever the metal at the forward and rear edges of each projection 62, as indicated at 65 in Fig. 6, in order to facilitate a slight shearing of the metal at these points when the projection is twisted as described, so that an interlocking engagement may be effected beween each projection 62 and the supporting plate.

Each sub-lever 22 is formed with a rearwardly extending projection or stop 66 free from contact with the supporting plate 25 when the parts are assembled in the machine

599

and at this time are inactive. When, however, the sub-levers are disconnected from the type bars and from the key levers, the spring 60 will turn said sub-levers a slight distance in an anti-clock-wise direction from the position shown in Fig. 6 until the stops 66 contact with the supporting plate 25 and arrest them against further movement under the reaction of the springs. This is in order that the parts may be maintained in positions where connections between the sub-levers and key levers and between the slides 18 and the type bars may be readily effected and aids materially in assembling and connecting the parts.

It will be understood that in assembling the machine each type bar may be lowered into position in its guide slot 11 and automatically connected with its slide 18 by the inter-engagement of the teeth 16 and 17. The pivot wire is then threaded through the pivot opening in the type bar and the next type bar is inserted in place and so on.

In some cases it may be found desirable to first mount all of the type bars on their pivot wire 14 and afterwards turn all of the slides 18 up into mesh with the type bars and then support them in this position by attaching the supporting strip 19 to the segment.

It will be seen that the segments 2 and 4, the pivot wire 14, the slides 18, the supporting plate 25, the type rest 15 etc. are all supported at an angle of about 8° to the horizontal causing the types to strike slightly above a horizontal line extending through the center of the platen. This gives a greater degree of visibility than in a construction in which the types strike on a horizontal line passing through the center of the platen, and nevertheless the type bars are actuated without side strain and with a uniform leverage throughout the system.

Thus far I have described the machine without reference to the type bar controlling means associated with each type action, and by which the type bar is slowed up as it approaches the printing position and the remainder of its movement to the printing point is effected by the stored energy of a momentum accumulator and associated parts after the printing key has been arrested, thereby effecting a substantially noiseless pressure imprint. These means will now be described.

Each type bar near the outer end thereof is apertured to receive a bushing 67 as shown in Fig. 15. A rivet 68 passes through this bushing and through coincident openings 69 in two parallel links 70, the rivet being headed at its ends. The links 70 thus pivoted to the type bar constitute one element or member of a toggle which is pivoted in a like manner by a bushing 71 and rivet 72 to the second element 73 of such toggle. The toggle element 73 is of a single thickness and at its forward end is received and guided in a radial guide slot 74 in the segment 2, where the element is anchored and pivoted on a segmental pivot wire 75 carried by said segment.

From a consideration of Figs. 1 and 3 it will be seen that this toggle 70, 73 breaks downward from the substantially straight line, horizontal, pressure-applying position shown in dotted line in Fig. 3, and in returning to the normal position the force of gravity of the toggle members aids in effecting their quick restoration and also enables me to keep the height of the machine within the limits required by the type bars themselves.

Referring more particularly to Figs. 1, 14, 15 and 16 it will be seen that a forward extension or arm 76 on each toggle member 73 is pierced at 77 to receive a bushing 78. This pierced arm, with the bushing therein, is received in a slot 79 in a weighted member or momentum accumulator 80 having pierced openings 81 in the side walls of the slotted portion thereof. A rivet 82 passes through the openings 81 and 77 and through the central opening in the bushing 78, thus pivotally connecting the member 80 to the associated toggle member 73. The weighted member 80 is further pierced at 83 to receive a pivot 84 reduced at its ends for reception in pierced opening 85 in an upright toggle member comprising two parallel side plates 86 brought together at their lower ends and united by an integral cross piece 87, as shown in Fig. 14. The lower end of the member 86, 87 is received in a radial guide slot 12 in the segment 4 and is pierced at 88 to receive a segmental pivot rod 89 carried by said segment.

The arm 90 of each weighted member 80, situated intermediate the pivots 82, 84 thereof, constitutes the second arm or element of the second toggle, the other arm or element of which is the member 86, 87.

It will be understood that the slots 11, 12 and 74 for each type action are located in the same radial plane, and that each type bar, its double toggle 70, 73, 86, 90, its weight 80, slide 18 and sub-lever 22 all operate in the same, or substantially the same radial plane in which the corresponding slots 11, 12 and 74 are located.

A slightly resilient, segmental, metallic buffer plate 91 is secured along one edge or at its base to the segment 4 by screws 92, leaving the upper free edge portion in the path of the toggle arms 86. From an inspection of the dotted line showing in Fig. 3 it will be understood that at about the time when a type bar is in printing position the associated toggle arms 86 will coact with the buffer plate 91 and that the latter not only will prevent both toggles 73, 76 and

86, 90 from overthrowing to or beyond their straight line actuated positions, but will tend to effect a quick withdrawal of the type from printing position and a rapid restoration of the parts to normal position.

Referring more particularly to Figs. 1 and 3 it will be understood that in the normal position of the parts the pivots 82, 84 and 89 of each type action are disposed substantially in a straight line and that each toggle 86, 90 at this time has a substantially straight line position, whereas each weight 80 is off-set laterally from such line and the force of gravity of each weight is exerted to straighten the companion toggle 70, 73 and move the associated type bar towards the printing position. While this is the tendency of each weight 80, it in itself is, of course, insufficient to overcome the resistance of the remaining parts including the returning spring 60, but nevertheless produces a type action that has a very easy start which is an important factor. It will be seen, moreover, that each weight 80 in moving from its normal to its final position, shown in dotted lines in Fig. 3, moves always in the same general direction which corresponds to the general direction of movement of the type bar; that each weight does not change its direction of movement from the normal position until an imprint has been effected; that in making such movement the force of gravity of the weight 80 assists its movement as well as the remaining parts of the controlling devices and type bar through the entire extent of the key depression; that the travel of each weight 80 is in a comparatively short underslung arc; that after the parts have been actuated by the depression of the key to the full line Fig. 3 position, and the key has been arrested by the stop 47, the energy of the momentum accumulator or weight 80 will complete the movements of the parts to dotted line printing position; that at this time the toggle 86, 90 will again be brought into a straightened condition where the pivots 82, 84 and 89 are substantially in line and effect a straightening of the toggle 73, 76; and that at this time the force of gravity of the member 80 as well as the downwardly breaking toggle members 73 and 76 is exerted to effect a quick withdrawal of the type bar from the printing position and a quick restoration of the parts to normal position.

From an inspection of Fig. 1 it will be seen that after a type bar in its return movement to normal position reaches the type rest 15, the weighted member 80 may continue its reverse movement, as indicated in dotted lines, until it is arrested by a segmental pad 93 carried by the segment 2 and supported in a corresponding recess in the under side thereof. The effect of this continued reverse movement of the member 80 at the time and after the type bar reaches the type rest 15, is to cause a reactive force to be exerted against the type bar which will prevent it from rebounding from the type rest. Thus, it will be seen that this continued reverse movement of the member 80 tends to bring the pivots 82, 84 and 89 even nearer to a straight line position and that this movement reacts against the toggle members 73 and 70 resisting a rebound movement of the type bar. It will be understood that if in the reverse movement of the parts the pivots 82, 84 and 89 reached a straight line position, or if there was an overthrow of the parts beyond such position, a positive lock of the type bar against rebound would be effected. I prefer to rely on the mere reaction of parts described to prevent rebound and not the positive locking of the parts, and for this reason arrange the stop or pad 93 so that it will arrest the member 80 just before the pivots 82, 84 and 89 reach the straight line position.

The weighted member 80 does not always continue its movement to the dotted line position. The extent, if any, to which the member 80 will continue its reverse movement after the type bar reaches the position of rest in its return movement, depends entirely on the force with which the return is effected. This is self regulating. The greater the force of the return movement of the parts, the greater will be the tendency of the type bar to rebound, and the greater will be the extent of continued reverse movement of the member 80 and consequently the greater will be the reaction against the parts to prevent rebound of the type bar. This feature for preventing the rebound of the type bars constitutes an important factor of the present invention.

I prefer to actuate the universal bar for the carriage escapement mechanism from the type bars, and have provided each of the type bars 13 with a projection or contact 94 on the forward edge and near the heel thereof. As a type bar nears the printing position its projection 94 contactively engages a yoke-like, substantially U-shaped universal bar designated as a whole by the reference numeral 95. This universal bar is preferably made from a single piece of sheet metal with a forwardly projecting flange or contact portion 96 with which the projections 94 on the type bars coact. The side arms 97 of the universal bar are pivoted at 98 to bracket arms 99 secured by screws 100 to the segment 4. These same screws secure bracket arms 101 to the segment to provide additional support for the pivot rod 35. One of the arms 97 of the universal bar is extended rearward beyond its pivot to provide an actuating arm 102 carrying an anti-friction roller 103 by which the carriage escapement (not shown) is controlled.

601

It will be seen that the type bars are arranged at varying distances from the pivots of the universal bar and that, therefore, the universal bar would, ordinarily, not receive a uniform extent of movement from the different type bars. In order to compensate for the variation in the distances of the type bars from the pivots of the universal bar and give a uniform extent of movement thereto from all of the type bars, I so construct and arrange the parts that the universal bar is normally tilted so that its contact face 96 at the center of the machine is closer to and will be picked up sooner by the projections 94 on the center type bars, (which are furthest from the pivots 98), than by the projections 94 on the terminal type bars, which are nearest the pivots 98. This arrangement compensates for the positions of the type bars throughout the entire system, and provides a simple and efficient construction for effecting a uniform extent of movement of the universal bar notwithstanding the variation in the distances of the type bars from the pivots of the universal bar.

In the operation of the machine the depression of a key 36 is effective to actuate the corresponding type bar through the associated sub-lever and slide 18. During the earlier stages of the operation of the type bar, and until the parts reach the full line position shown in Fig. 3, the controlling weight and toggles are actuated by the type bar. It will be seen that this lasts throughout the depression of the key and until it is arrested by the stop 47. From this point and for the remainder of the printing stroke, the type bar will complete its movement by its own momentum and that of the double toggle and momentum accumulator 80, and mainly of the latter, which straightens the toggles and applies a pressure imprint. It will be seen that during the movement of the parts from the full to the dotted line position in Fig. 3, the connecting loop 32 moves independently of the associated key lever. It is essential, therefore, that the connections be such as to afford this independent movement of the parts otherwise the type bar would be blocked against movement to printing position.

It will be understood that in the present invention there are a number of factors that enter into consideration in producing a highly efficient machine of the character specified, some of which factors have been referred to but nevertheless will be hereinafter specified.

Although each type bar travels further in the present construction than in my prior patented constructions referred to, the connection, construction and arrangement of the parts, and the underslung arrangement of the momentum accumulator or weighted member 80 of the present invention enables me to cause said weighted member to travel through a comparatively small arc, which has a distinct advantage in slowing up the movement of the bar and effecting a pressure imprint therefrom substantially without noise. This makes for a quicker throw of the weighted member during the last part of the printing movement of the type bar and the first part of its return movement giving greater efficiency for the comparatively longer throw of the type bar and with less noise than could ordinarily be produced where such a long throw of the type bar is provided.

The underslung weighted member and downwardly breaking of the toggle also contributes materially to the production of a lower lying and more compact machine, valuable in the production of a portable machine.

A machine like the present one in which the force of gravity of the downwardly breaking toggle and the weighted member 80 tends to quickly return the type bar from the printing position aids in the production of an easy and rapidly operating machine.

The construction which provides for a straight line arrangement of the pivots of the toggle members 86 and 90 in the normal position of the parts as well as at the printing operation, together with the off-set arrangement of the weight 80 in both such positions contributes materially to the production of an action which has a very easy start and a quick return, the gravity of the weight in one case exerting its force to advance the type bar from normal position and in the other case to effect a rapid return thereof from the printing point.

The construction that enables the weight to continue its return movement after the type bar reaches its normal position of rest, and through the controlling connections to exert a reaction against the type bar rebounding from the type bar rest, constitutes a valuable factor.

The construction and arrangement of the parts whereby a substantially uniform leverage and extent of dip of the keys throughout the system and an avoidance of side strains is provided is of course a contributing factor in the production of a highly satisfactory, easy operating machine with a uniform touch.

There is an enclosing shell for the machine which it is not deemed necessary to illustrate.

It will be understood from the foregoing that I have provided a small, yet highly efficient visible, portable, typewriting machine in which the parts are compactly arranged to provide a machine of minimum height, which is noiseless or substantially noiseless in its operation and in which the

602

parts are constructed, arranged and correlated with the above objects in views and in order to provide a comparatively cheap machine embodying an easy operating and rapid type action involving the use of a pivoted type bar.

I have filed a number of copending applications bearing Serial Nos. 232,582; 242,398; 242,799; 242,800; 252,399; 253,076; 254,744; 255,071 and 256,613 on constructions having some of the same general purposes in view as the present construction. The claims in this application are restricted to features not disclosed in said previously filed applications.

Various changes may be made in the construction, and some of its features may be employed without others, without departing from my invention as it is defined in the accompanying claims.

What I claim as new and desire to secure by Letters Patent is:

1. The combination of a type bar; means for actuating the type bar; and controlling means actuated by the type bar and operative thereon for causing said type bar to be applied with a pressure imprint in substantially a noiseless manner, said controlling means including a toggle that is substantially in a straight line position when an imprint is effected and which breaks downward from such position in the return of the type bar to normal position so that the force of gravity of the members of the toggle aids in breaking the toggle and in effecting a quick return of the type bar from the printing position as well as providing a comparatively low lying type action, and a weighted member beneath and effective on said toggle and the force of gravity of which weight is exerted when the parts are in normal position to tend to straighten said toggle and force the type bar towards the printing point.

2. The combination of a type bar; and controlling means for causing said type to be applied with a pressure imprint in substantially a noiseless manner, said controlling means including a toggle, and a weighted member effective on said toggle and the force of gravity of which weighted member is exerted to tend to straighten the toggle when the parts are in normal position and force the type bar towards the printing point, the weighted member continuing its motion in the same general direction as the type bar throughout the movement of the latter from normal to printing position and the force of gravity of said weighted member also being exerted to break the toggle from a substantially straightened position after an imprint has been effected.

3. The combination of a type bar; and controlling means for causing said type to be applied with a pressure imprint in substantially a noiseless manner, said controlling means including a weighted member, and means which enable the force of gravity of said weighted member to be exerted to tend to move the type bar towards the printing position when the parts are in normal position of rest and which enable the weighted member to move back beyond its normal position after the type bar returns to its normal position and to counteract the tendency of the type bar to rebound from normal position.

4. The combination of a rigid type bar pivoted to swing in an arc to the printing position; a printing key; intermediate actuating connections between said key and type bar for setting the type bar in motion; and controlling means set in motion by the type bar for causing the latter to be applied with a pressure imprint substantially in a noiseless manner, said controlling means including a toggle connected at one end to the type bar near the type carrying end thereof, and a second toggle operating on said first mentioned toggle and constructed and related so that the pivots of the members of said second toggle are brought approximately in a straight line when the parts are in normal position and are again in approximately a straight line condition when the type bar is in printing position.

5. The combination of a rigid type bar pivoted to swing in an arc to the printing position; a printing key; intermediate actuating connections between said key and type bar for setting the type bar in motion; and controlling means set in motion by the type bar for causing the latter to be applied with a pressure imprint substantially in a noiseless manner, said controlling means including a toggle connected at one end to the type bar near the type carrying end thereof, a second toggle operating on said first mentioned toggle and constructed and related so that the pivots of the members thereof are approximately in a straight line when the type bar is in normal position, and a momentum accumulator which applies its energy to straighten said toggles and apply pressure to the type bar at the last portion of the printing stroke.

6. The combination of a rigid type bar pivoted to swing in an arc to the printing position; a printing key; intermediate actuating connections between said key and type bar for setting the type bar in motion; and controlling means set in motion by the type bar for causing the latter to be applied with a pressure imprint substantially in a noiseless manner, said controlling means including a toggle constructed and related so that the pivots of the members of said toggle are brought substantially in line when the type bar is in normal position, and a momen-

603

tum accumulator which applies its energy to straighten said toggle and apply pressure to the type bar at the last portion of the printing stroke, said momentum accumulator being so disposed in its normal position that force of gravity thereof tends to actuate said toggle and move the type bar to printing position.

7. The combination of a rigid type bar pivoted to swing in an arc to the printing position; a printing key; intermediate actuating connections between said key and type bar for setting the type bar in motion; and controlling means set in motion by the type bar for causing the latter to be applied with a pressure imprint substantially in a noiseless manner, said controlling means including a toggle constructed and related so that the pivots of the members of said toggle are brought substantially in line when the type bar is in normal position, and a momentum accumulator which applies its energy to straighten said toggle and apply pressure to the type bar at the last portion of the printing stroke, said momentum accumulator being disposed and connected so that in its return movement it may continue its motion after the type bar reaches the normal position and thereby control the toggle to tend to resist or counteract the tendency of the type bar to rebound from normal position.

8. The combination of a rigid type bar pivoted to swing in an arc to the printing position; a printing key; intermediate actuating connections between said key and type bar for setting the type bar in motion; and controlling means set in motion by the type bar for causing the latter to be applied with a pressure imprint substantially in a noiseless manner, said controlling means including a toggle constructed and related so that the pivots of the members thereof are brought substantially in line when the type bar is in normal position, and a momentum accumulator which applies its energy to straighten said toggle and apply pressure to the type bar at the last portion of the printing stroke, said momentum accumulator being connected and disposed so that the force of gravity thereof in the normal position of the parts tends to move the type bar towards the printing position and after the imprint is produced tends to effect a quick return of the type bar from printing position.

9. The combination of a rigid type bar pivoted to swing in an arc to the printing position; a printing key; intermediate actuating connections between said key and type bar for setting the type bar in motion; and controlling means set in motion by the type bar for causing the latter to be applied with a pressure imprint substantially in a noiseless manner, said controlling means including a toggle connected at one end to the type bar and anchored at its opposite end, a second toggle operating on said first mentioned toggle transversely thereof, and a momentum accumulator connected to said second toggle and having a continued movement in one and the same general direction as the type bar in the movement of the latter to the printing position, the construction and relation of the parts being such that the force of gravity of the momentum accumulator acting on said toggles tends to move the type bar from its normal position towards the printing position and also tends to cause both toggles to be quickly broken after the imprint is effected and bring about a quick return of the type bar from printing position.

10. The combination of a rigid type bar pivoted to swing in an arc to the printing position; a printing key; intermediate actuating connections between said key and type bar for setting the type bar in motion; and controlling means set in motion by the type bar for causing the latter to be applied with a pressure imprint substantially in a noiseless manner, said controlling means including a toggle connected at one end to the type bar and anchored at the opposite end, said toggle assuming substantially a straight line position when the type bar is printing and breaking downward from such position, a second toggle wholly underlying the first mentioned toggle when the latter is straightened and operating transversely thereon, the pivots of said second toggle being substantially in a straight line when the parts are in normal position and also when in the actuated position, and a momentum accumulator connected with said second toggle and off-set laterally from a line extending through the pivots thereof when they are brought into line either in the normal or in the actuated position of the parts, said accumulator being at all times below the anchorage of the first mentioned toggle.

11. The combination of a rigid type bar pivoted to swing in an arc to the printing position; a printing key; intermediate actuating connections between said key and type bar for setting the type bar in motion; and controlling means set in motion by the type bar for causing the latter to be applied with a pressure imprint substantially in a noiseless manner, said controlling means including a toggle connected at one end to the type bar and anchored at the opposite end, said toggle assuming substantially a straight line position when the type bar is printing and breaking downward from such position, a second toggle wholly underlying the first mentioned toggle when the latter is straightened and operating transversely thereon, and a momentum accumulator connected with said second toggle and off-set laterally from a line extending through the pivots thereof

604

605

when they are brought into line, said accumulator being at all times below the anchorage of the first mentioned toggle, said second toggle attaining a substantially straight position in the normal and also in the actuated position and the force of gravity of the accumulator tending to move the type bar from normal position towards the printing position and also tending to break the toggles from the substantially straightened positions they assume when the printing is effected and thereby cause a quick return of the type bar from the printing point.

12. The combination of a type rest; a type bar; and means for controlling the movement of said type bar comprising a finger key, a toggle, a momentum accumulator which supplies the final energy necessary to straighten the toggle at the last part of the printing movement of the type bar, and means which afford a continued reverse movement of said momentum accumulator after the type bar in its return movement reaches the type rest and to thereby exert a reaction against the type bar rebounding from said type rest.

13. The combination of a type bar mounted to turn in an arc around a fixed pivot in front of and below the platen and to effect an impression from a type face against the front of the platen or the paper thereon, key actuated means for operating said type bar, and means set in motion by and operative for controlling the movement of said type bar comprising a toggle connected therewith and substantially horizontally disposed when the toggle is straightened to apply a pressure imprint, said toggle breaking downward from its straight line pressure applying position, a momentum accumulator operatively connected with said toggle and which when the toggle is in a straight line condition acts by its force of gravity to aid in breaking said toggle from said straightened condition, and a second toggle through which power is exerted from said momentum accumulator on the first mentioned toggle, the pivots of said second toggle being approximately in a straight line when the parts are in normal position.

14. The combination of a type bar mounted to turn in an arc around a fixed pivot in front of and below the platen and to effect an impression from a type face against the front of the platen or the paper thereon, and means for controlling the movement of said type bar comprising a toggle connected therewith and substantially horizontally disposed when the toggle is straightened to apply a pressure imprint, said toggle breaking downward from its straight line pressure applying position, a momentum accumulator operatively connected with said toggle and which supplies final energy to straighten the toggle at the last part of the printing movement of the type bar, and means which afford a continued reverse movement of said momentum accumulator after the type bar in its return movement reaches the normal position of arrest and to thereby exert a reaction against the rebound of the type bar from such position.

15. The combination of a type bar mounted to turn in an arc around a fixed pivot in front of and below the platen and to effect an impression from a type face against the front of the platen or the paper thereon, and means for controlling the movement of said type bar comprising a toggle connected to the type bar and substantially horizontally disposed when in the straight line position, a second toggle connected with and arranged wholly below and transversely of the first mentioned toggle when the type bar is in the printing position, a momentum accumulator underslung beneath the first toggle and connected rigidly with one of the members of said second toggle and which supplies the final energy to straighten both toggles at the last part of the pivotal movement of the type bar to printing position, the construction and arrangement of the parts being such that the momentum accumulator may receive a continued reverse movement after the type bar in its return movement reaches the normal position of arrest and thereby exert a reaction against the type bar rebounding from such position, a printing key, and means controlled thereby for setting up an operating movement of said type bar, toggles and momentum accumulator.

16. The combination of a type bar mounted to turn in an arc around a fixed pivot in front of and below the platen and to effect an impression from a type face against the front of the platen or the paper thereon, key operated means for actuating the type bar, and means set in motion by and controlling the movement of said type bar comprising a toggle having an upright member mounted to turn on a fixed pivot at its lower end, and a coacting member pivoted to the upper end of said upright member, a momentum accumulator connected to one of said toggle members and a second toggle connected to said type bar and breaking downward from substantially the straight line horizontal position that it assumes at the last part of the printing stroke of the type bar and at which time said second toggle is disposed entirely above said first mentioned toggle and the momentum accumulator.

17. The combination of a type bar mounted at its lower end to turn on a fixed pivot, a toggle pivoted at one end to the upper end of the type bar and at its other end to a fixed point and substantially horizontally disposed when in the straight line position and

605

breaking downward from such position, a second toggle connected to the first mentioned toggle and located wholly below and transversely of the first toggle when the latter is straightened, a momentum accumulator forming a part of one of the members of said second toggle, the construction and arrangement of the parts being such that said accumulator may continue its movement after the type bar has reached its normal position of arrest and exert a reaction against the type bar rebounding from such position.

18. The combination of a key lever, a key actuated member having an off-set perforated ear, and a loop-like link through which said key lever extends and one side arm or member of which passes through a perforation in said ear, whereby said link may swivel to compensate for any differences in the planes of movement of said key lever and key actuated member.

19. In a typewriting machine, the combination of a series of radially disposed pivoted type bars, a series of key levers of different lengths, and intermediate connections between said key levers and type bars including radially disposed sub-levers having arms of different lengths in accordance with the differences in the lengths of the key levers in orders to compensate for the differences in lengths of the key levers and provide substantially a uniform leverage throughout the system.

20. In a typewriting machine, the combination of a series of radially disposed pivoted type bars, a series of key levers of different lengths, and intermediate connections between said key levers and type bars including radially disposed sub-levers having arms of different lengths in accordance with the differences in the lengths of the key levers in order to compensate for the differences in lengths of the key levers and provide substantially a uniform leverage throughout the system, and radially disposed slides connected to said sub-levers and operatively connected to said type bars.

21. In a typewriting machine, the combination of a series of radially disposed pivoted type bars, a series of radially disposed slides engaging and actuating said type bars, a series of radially disposed bell crank sub-levers connected to and actuating said slides, each associated type bar, slide and sub-lever moving in the same radial plane, a series of substantially parallel key levers, and connections between said key levers and sub-levers, each of said connections being substantially at the line of intersection of the planes of the associated key lever and sub-lever, said key levers being of different lengths and the sub-levers having arms of different lengths in accordance with the differences in lengths of the key levers in order to provide substantially a uniform leverage throughout the system.

22. In a typewriting machine, the combination of a series of radially disposed pivoted type bars, a series of key levers of different lengths, intermediate connections between said key levers and type bars including radially disposed sub-levers having arms of different lengths in accordance with the differences in the lengths of the key levers in order to provide substantially a uniform leverage throughout the system, and means for variably arresting the depression of the key levers in accordance with the differences in the lengths thereof in order to provide substantially uniform dip of the keys in the keyboard.

23. In a typewriting machine, the combination of a series of radially disposed pivoted type bars with rack teeth thereon, a series of radially disposed slides for actuating said type bars, each of said slides having rack teeth that engage the rack teeth on the associated type bar, a series of radially disposed bell crank sub-levers connected to and actuating said slides, a series of substantially parallel key levers, connections between said key levers and sub-levers, each of said connections being substantially at the line of intersection of the planes of the associated key lever and sub-lever, said key levers being of varying lengths and the sub-levers having arms that vary in length in accordance with the variation in length of the key levers in order to provide substantially a uniform leverage throughout the system, and means for variably arresting the depression of the key levers in accordance with the variation in the length thereof in order to provide substantially uniform dip of the keys in the keyboard.

24. In a typewriting machine, the combination of a series of radially disposed pivoted type bars, a series of key levers of different lengths, intermediate connections between said key levers and type bars including sub-levers having arms of different lengths in accordance with the differences in the lengths of the key levers in order to provide substantially a uniform leverage throughout the system, and means for supporting said sub-levers at varying points fore and aft of the machine in accordance with the differences in the lengths of the lever arms thereof for the purpose stated, whereby the ends of one set of lever arms of said sub-levers may be arranged substantially in line transversely of the machine notwithstanding the differences in the lengths thereof.

25. In a typewriting machine, the combination of a series of radially disposed pivoted type bars, a series of radially disposed slides engaging and actuating said type bars, a series of radially disposed bell crank sub-

606

607

levers connected to and actuating said slides, each type bar and its associated slide and sub-lever moving in the same radial plane, a series of substantially parallel key levers, and connections between said key levers and sub-levers, each of said connections being substantially at the line of intersection of the planes of the associated key lever and sub-lever and comprising a swivel that accommodates itself to the variation in the planes of movement of the associated key lever and sub-lever relatively one to the other depending on the location of the associated type action in the system.

26. In a type action for typewriting machines, the combination of a sub-lever, a key lever, and an intermediate connection between the two comprising a member connected to the key lever and arranged in the plane thereof and providing for an independent continued movement of said member after the key lever reaches the limit of its depression, and a swivel connecting said member to the sub-lever.

27. In a type action for typewriting machines, the combination of a sub-lever, a key lever, and an intermediate connection between the two comprising an inverted substantially U-shaped member, in which the key lever is seated, and a swivel connection between one arm of said substantially U-shaped member and the sub-lever.

28. In a type action for typewriting machines, the combination of a sub-lever, a key lever, and an intermediate connection between the two comprising an inverted substantially U-shaped member in which the key lever is seated, and a swivel connection between one arm of said substantially U-shaped member and an arm of the sub-lever located substantially above the opening in the U-shaped member.

29. In a typewriting machine, the combination of a system of type actions comprising a series of radially arranged type bars, a series of radially arranged sub-levers, a series of substantially parallel underlying key levers, each type bar and its associated sub-lever moving in the same radial plane and the plane of movement of each sub-lever intersecting the plane of movement of its associated key lever, and a swivel connection between each key lever and its associated sub-lever arranged at the line of intersection of the planes of movement thereof, whereby each swivel will accommodate itself to particular angular relation between the associated key lever and a sub-lever depending on the position thereof in the system of type actions.

30. In a typewriting machine, the combination of a supporting plate having apertures therein, and a hanger having integral depending projections received in apertures in the supporting plate, one of said projections being extended to underlie and interlock with the body portion of the supporting plate and secure the hanger in place without the aid of screws.

31. In a typewriting machine, the combination of a supporting plate having apertures therein, and a hanger having depending projections received in apertures in the supporting plate, one of said projections being extended to underlie and interlock with the body portion of the supporting plate and another projection bendable to interlock with the supporting plate and thus prevent an accidental detachment of the hanger.

32. In a typewriting machine, the combination of a supporting plate having apertures therein, a hanger having depending projections received in apertures in the supporting plate, one of said projections being extended to underlie and interlock with the supporting plate, a lever pivoted to said hanger at one end thereof, and a returning spring anchored to the opposite end of the hanger and operatively connected with said lever.

33. In a typewriting machine, the combination of a supporting plate having apertures therein, and a hanger having depending integral projections received in apertures in the supporting plate, one of said projections having a hook-like formation that engages under the supporting plate and interlocks therewith when said projection is in its aperture and the hanger is displaced longitudinally, and a second integral projection engaging a companion aperture in the supporting plate to prevent a longitudinal displacement of the hanger and a freeing of the hook-like projection from interlocking engagement with the plate, whereby said hanger may be detachably connected to said supporting plate without the aid of screws.

34. In a typewriting machine, the combination of a supporting plate having apertures therein, and a hanger having depending projections received in apertures in the supporting plate, one of said projections having a hook-like formation that engages under the supporting plate and interlocks therewith when said projection is in its aperture and the hanger is displaced longitudinally, and a second projection engaging a companion aperture in the supporting plate to prevent a longitudinal displacement of the hanger and a freeing of the hook-like projection from interlocking engagement with the plate, said second projection being bendable into interlocking engagement with the supporting plate to prevent a detachment of the hanger therefrom.

35. In a typewriting machine, the combination of a series of radially disposed pivoted type bars, a series of radially disposed slides engaging and actuating said type

607

bars, a series of radially disposed bell crank sub-levers connected to and actuating said slides, a series of substantially parallel key levers, the key levers and sub-levers moving in intersecting planes, connections between said key levers and sub-levers, each of said connections being substantially at the line of intersection of the planes of the associated key lever and sub-lever, and a series of momentum accumulators connected with and actuated by the type bars and each moving in the radial plane of the associated type bar, whereby each type bar is slowed up as it approaches the printing position and a pressure imprint is effected in substantially a noiseless manner and there is an avoidance of lateral stress in the actions throughout the system.

36. In a typewriting machine, the combination of a series of radially disposed pivoted type bars with rack teeth thereon, a series of radially disposed slides for actuating said type bars, each of said slides having rack teeth that engage the rack teeth on the associated type bar, a series of radially disposed bell crank sub-levers connected to and actuating said slides, a series of substantially parallel key levers, the key levers and sub-levers moving in intersecting planes, connections between said key levers and sub-levers, each of said connections being substantially at the line of intersection of the planes of the associated key lever and sub-lever, and a series of momentum accumulators connected with and actuated by the type bars and each moving in the radial plane of the associated type bar, whereby each type bar is slowed up as it approaches the printing position and a pressure imprint is effected in substantially a noiseless manner and there is an avoidance of lateral stress in the actions throughout the system.

37. In a typewriting machine, the combination of a series of radially disposed pivoted type bars, a series of radially disposed slides engaging and actuating said type bars, a series of radially disposed bell crank sub-levers connected to and actuating said slides, a series of substantially parallel key levers, the key levers and sub-levers moving in intersecting planes, connections between said key levers and sub-levers, each of said connections being substantially at the line of intersection of the planes of the associated key lever and sub-lever, said key levers being of varying lengths and the sub-levers having arms that vary in length in accordance with the variation in length of the key levers in order to provide substantially a uniform leverage throughout the system, and controlling means connected with each type bar for slowing up its movement as it approaches the printing position and effecting a pressure imprint in substantially a noiseless manner, said controlling means comprising two toggles acting one on the other, and a momentum accumulator connected therewith and the energy of which is exerted to straighten the toggles, each type bar, its slide, sub-lever, toggles and momentum accumulator moving substantially in the same radial plane.

38. In a typewriting machine, the combination of a series of radially disposed pivoted type bars, a series of radially disposed slides engaging and actuating said type bars, a series of radially disposed bell crank sub-levers connected to and actuating said slides, a series of substantially parallel key levers, the key levers and sub-levers moving in intersecting planes, connections between said key levers and sub-levers, each of said connections being substantially at the line of intersection of the planes of the associated key lever and sub-lever and comprising a swivel that accommodates itself to the variation in the planes of movement of the associated key lever and sub-lever relatively one to the other depending on the location of the associated type action in the system, and controlling means connected with each type bar for slowing up its movement as it approaches the printing position and effecting a pressure imprint in substantially a noiseless manner, said controlling means comprising two toggles acting one on the other, and a momentum accumulator connected therewith and the energy of which is exerted to straighten the toggles.

39. In a typewriting machine, a system of type actions comprising a series of radially arranged type bars, a series of radially arranged sub-levers, a series of substantially parallel underlying key levers, the plane of movement of each sub-lever intersecting the plane of movement of its associated key lever, a swivel connection between each key lever and its associated sub-lever arranged at the line of intersection of the planes of movement thereof, whereby each swivel will accommodate itself to the particular angular relation between the associated key lever and sub-lever depending on the position thereof in the system of type actions, and controlling means connected with each type bar for slowing up its movement as it approaches the printing position and effecting a pressure imprint in substantially a noiseless manner, said controlling means comprising two toggles acting one on the other, and a momentum accumulator connected therewith and the energy of which is exerted to straighten the toggles.

40. In a typewriting machine, the combination of a series of segmentally arranged pivoted type bars, key actuated means for operating said type bars, controlling means for the type bars set in motion thereby and comprising a series of segmentally arranged double toggles, a fixed segmental slightly

608

609

resilient metal buffer in the path of one of the elements of each double toggle and with which it coacts at about the time when the associated type bar reaches the printing position to prevent overthrow of the toggles and aid in effecting a rapid return of the actuated type bar from printing position, and key operated means for actuating said type bar.

41. In a typewriting machine, the combination of a series of segmentally arranged pivoted type bars, key actuated means for operating said type bars, controlling means for the type bars set in motion thereby and comprising a series of segmentally arranged double toggles, a fixed segmental slightly resilient metal buffer in the path of one of the elements of each double toggle and with which it coacts at about the time when the associated type bar reaches the printing position to prevent overthrow of the toggles and to aid in effecting a rapid return of the actuated type bar from printing position, said buffer comprising a segmental slightly resilient metal plate free along one curved edge where the toggle elements coact therewith and secured at its opposite edge or base to a fixed part of the machine.

42. In a typewriting machine, the combination of a series of segmentally arranged pivoted type bars, and a pivoted segmental universal bar actuated by said type bars, the type bars from the center to the sides of the system being at varying distances from the pivotal center of the universal bar and the contact face of the universal bar being normally disposed in a plane at an angle to a plane passing through the contact portions of the type bars which coact therewith, whereby the universal bar will be moved a uniform distance by all of said type bars.

43. In a typewriting machine, the combination of a series of segmentally arranged pivoted type bars, and a pivoted segmental universal bar actuated by said type bars, the type bars from the center to the sides of the system being at varying distances from the pivotal center of the universal bar, said universal bar being tilted so as to normally present its contact face in a plane at an angle to a plane passing through the contacts on the type bars which coact therewith, whereby the universal bar will be picked up by different type bars at different points in the strokes thereof but will be moved a uniform distance by all of said type bars.

44. In a typewriting machine, the combination of a series of segmentally arranged pivoted type bars, and a pivoted segmental universal bar actuated by said type bars, the type bars from the center to the sides of the system being at varying distances from the pivotal center of the universal bar, the relative disposition between the contact face of the universal bar and the portions of the type bars which coact therewith being normally such that a uniform extent of movement is transmitted to the universal bar notwithstanding the variation in the distance of the different type bars from the pivotal center of the universal bar.

45. In a typewriting machine, the combination of a series of radially disposed pivoted type bars the pivots of which are arranged in a plane at substantially right angles to a plane that extends tangentially of the platen at the printing line, a series of radially disposed slides engaging and actuating said type bars and each moving in the same radial plane as its associated type bar, a series of radially disposed bell crank sub-levers connected to and actuating said slides and each moving in the same radial plane as its associated type bar, a series of substantially parallel key levers, and connections between said key levers and sub-levers, each of said connections being substantially at the line of intersection of the planes of the associated key lever and sub-lever.

46. In a typewriting machine, the combination of a series of radially disposed pivoted type bars with rack teeth thereon, the pivots of said type bars being arranged in a plane at substantially right angles to a plane that extends tangentially of the platen at the printing line, a series of radially disposed slides for actuating said type bars, each of said slides having rack teeth that engage the rack teeth on the associated type bar and moving in the same radial plane as its associated type bar, a series of radially disposed bell crank sub-levers connected to and actuating said slides and each moving in the same radial plane as its associated type bar, a series of substantially parallel key levers, and connections between said key levers and sub-levers, each of said connections being substantially at the line of intersection of the planes of the associated key lever and sub-lever.

47. In a typewriting machine, the combination of a series of radially disposed pivoted type bars, a series of key levers which vary in length, intermediate connections between said key levers and type bars including radially disposed sub-levers having arms that vary in length in accordance with the variation in the length of the key levers in order to provide substantially a uniform leverage throughout the system, each type bar and its sub-lever moving in the same radial plane, and controlling means connected with each type bar for slowing up its movement as it approaches the printing position and effecting a pressure imprint in substantially a noiseless manner, said controlling means comprising two toggles acting one on the other and a momentum accumulator connected therewith and the energy of

609

which is exerted to straighten the toggles, each type bar, its sub-lever, toggles and momentum accumulator moving substantially in the same radial plane.

48. In a typewriting machine, the combination of a series of pivoted type bars, key operated means for actuating each type bar, controlling means for each type set in motion thereby and comprising a toggle connected at one end to the associated type bar near the type carrying end of the latter and anchored at its opposite end, said toggle when straightened being substantially horizontally disposed, a second upright toggle connected at one end to the first mentioned toggle and anchored at its lower end, an underslung momentum accumulator connected to one of the elements of said second toggle, a single buffer in the path of the other element of each of said second toggles and with which it coacts at about the time when the associated type bar reaches the printing position to prevent overthrow of the toggles and to aid in effecting a rapid return of the type bar from printing position.

49. In a typewriting machine, the combination of a cylindrical platen, a series of segmentally arranged type bars, a type segment having radially disposed slots in which said type bars are pivoted, the plane in which the pivots of the series of type bars are located being at substantially right angles to a plane tangential with the platen at the printing line, a series of key actuated slides received and guided in said radially disposed slots and coacting with the type bars to actuate them, and a flat detachable support arranged in a plane parallel with the said plane in which the pivots of the type bars are located and underlying said slides and a removal of which permits a detachment of the slides from the type bars.

50. The combination of a type bar; key actuated means for actuating the type bar; and controlling means set in motion by and controlling the type bar and causing it to be applied with a pressure imprint in substantially a noiseless manner, said controlling means including a toggle set in motion by the type bar, and a weighted member effective on said toggle and the force of gravity of which weighted member is exerted to tend to straighten the toggle when the parts are in normal position and force the type bar towards the printing point, the weighted member continuing its motion in the same general direction as the type bar throughout the movement of the latter from normal to printing position.

51. The combination of a type bar; and controlling means for causing said type to be applied with a pressure imprint in substantially a noiseless manner, said controlling means including a toggle connected at one end to the type carrying end of the type bar to apply pressure thereon, a second toggle operatively connected to said first mentioned toggle, said second toggle assuming approximately a straight line or dead centered position when at rest in its normal position, and a momentum accumulator constructed and arranged to exert its force of gravity on said second toggle tending to break it from a straight line condition when the parts are in the normal position.

52. The combination of a type bar; and controlling means for causing said type to be applied with a pressure imprint in substantially a noiseless manner, said controlling means including a toggle connected at one end to the type carrying end of the type bar to apply pressure thereon, a second toggle operatively connected to said first mentioned toggle, said second toggle assuming approximately a straight line position at two different points, one approximately straight line position of the toggle being attained when the type bar is at rest in the normal position and the other at the last part of the printing stroke of the type bar, and a momentum accumulator constructed and arranged to exert its force of gravity on said second toggle tending to break it from a straight line condition when the parts are in the normal position.

53. The combination of a rigid type bar pivoted to swing in an arc to the printing position; a printing key; means controlled by said key for actuating the type bar; and controlling means set in motion by the type bar for controlling it and causing the type bar to be applied with a pressure imprint in substantially a noiseless manner, said controlling means including a toggle connected at one end to the type carrying end of the type bar to apply pressure thereon, a second toggle operatively connected to said first mentioned toggle and which second toggle assumes approximately a straight line position at two points in the movement of the type bar from the normal to the printing position, and a momentum accumulator constructed and arranged to exert its force of gravity on said second toggle tending to break it from a straight line condition when the parts are in normal position.

Signed at Stamford in the county of Fairfield and State of Connecticut this 8th day of January, A. D. 1929.

GEORGE G. GOING.

610

Feb. 13, 1934. C. A. JOERISSEN Re. 19,076

SUPREME COURT OF DISTRICT OF COLUMBIA
Joerissen v. Remington Rand, Inc. } Equity 56,895.
PLAINTIFF'S EXHIBIT 11.

Pltffs Ex. (11)

TYPEWRITING MACHINE

Original Filed March 22, 1926 3 Sheets-Sheet 2

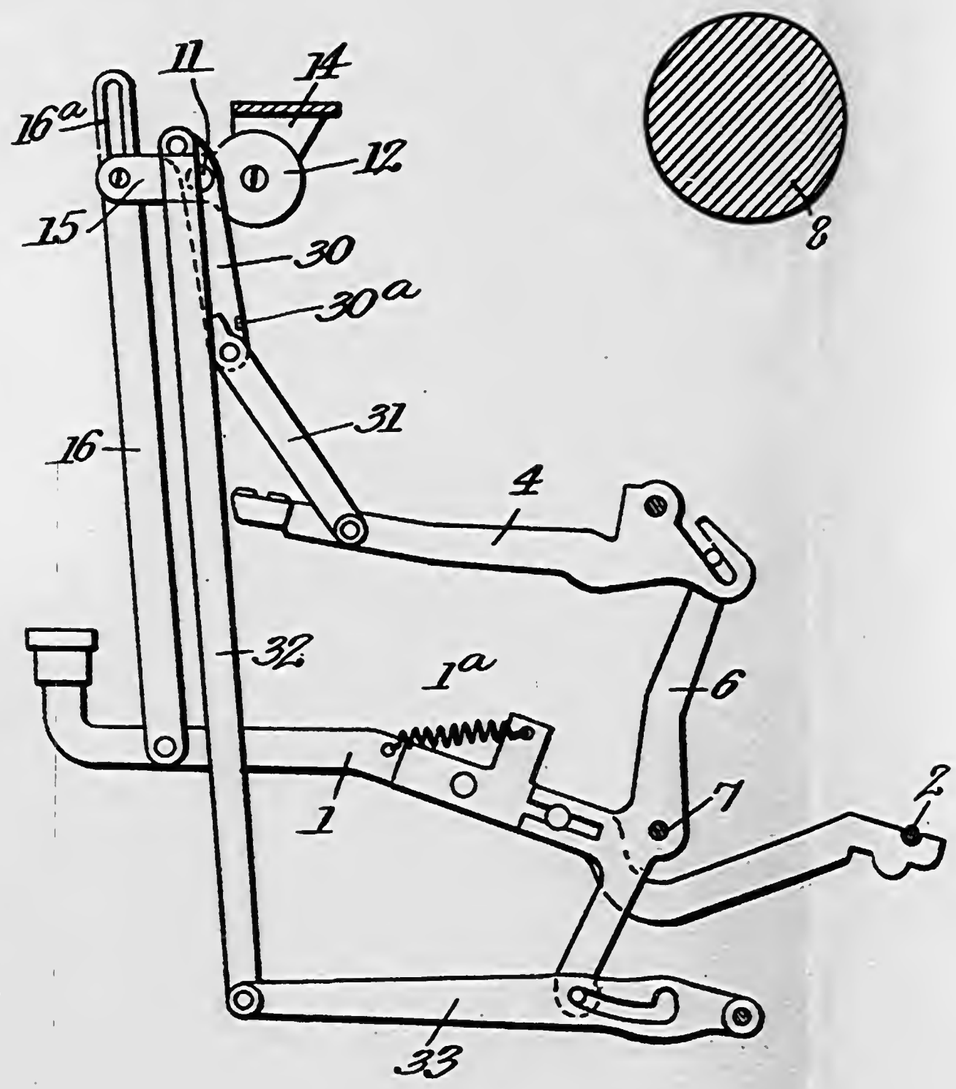

Fig. 5.

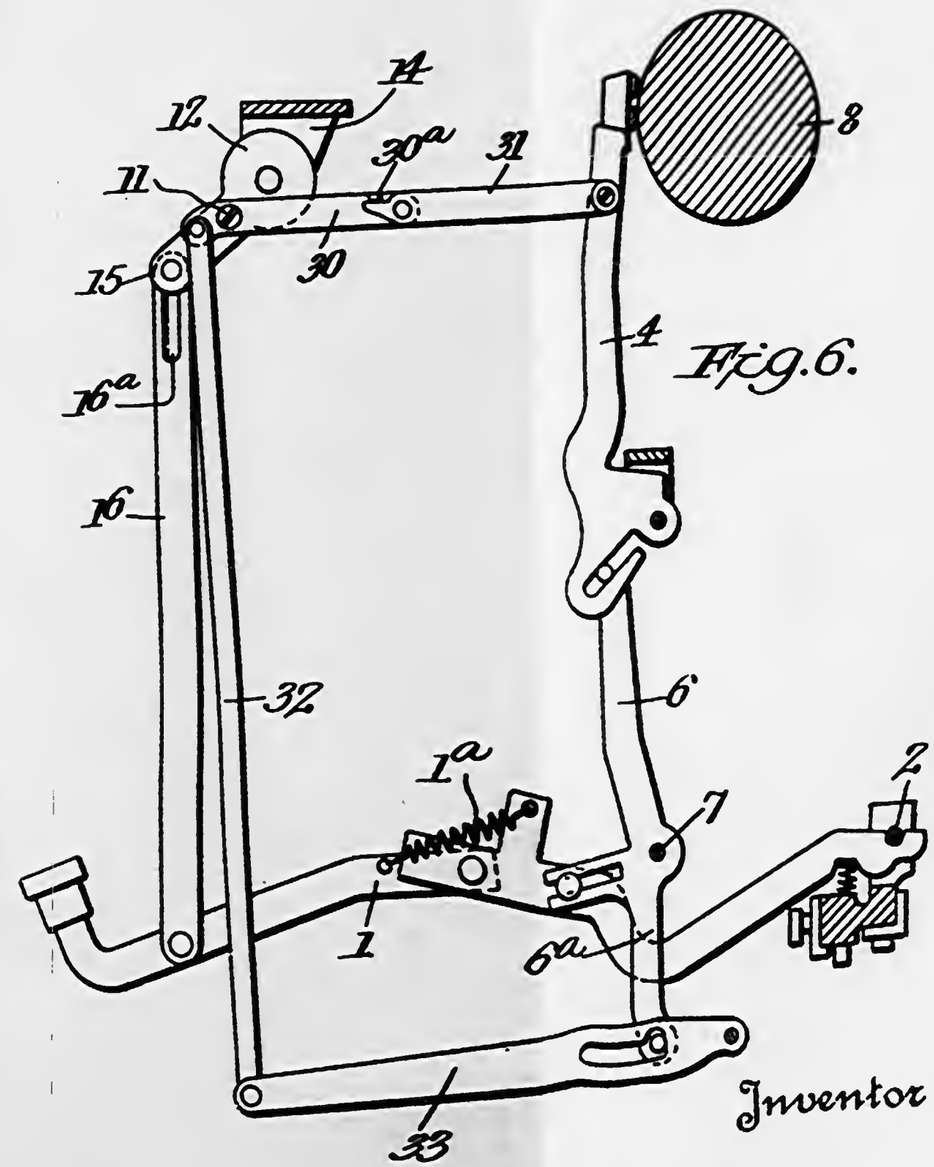

Fig. 6.

Inventor
Carl A. Joerissen.

By Coulman, Bryant & Darby
Attorneys

May 9, 1933.

SUPREME COURT OF DISTRICT OF COLUMBIA
Jorrissen v. Remington Rand, Inc. } Equity 56,895.
PLAINTIFF'S EXHIBIT 12.

Plaintiff's Ex (12)

Orig.

G. G. GOING

TYPEWRITING MACHINE

Filed Jan. 10, 1929

1,908,140

5 Sheets-Sheet 1

715

Fig. 1

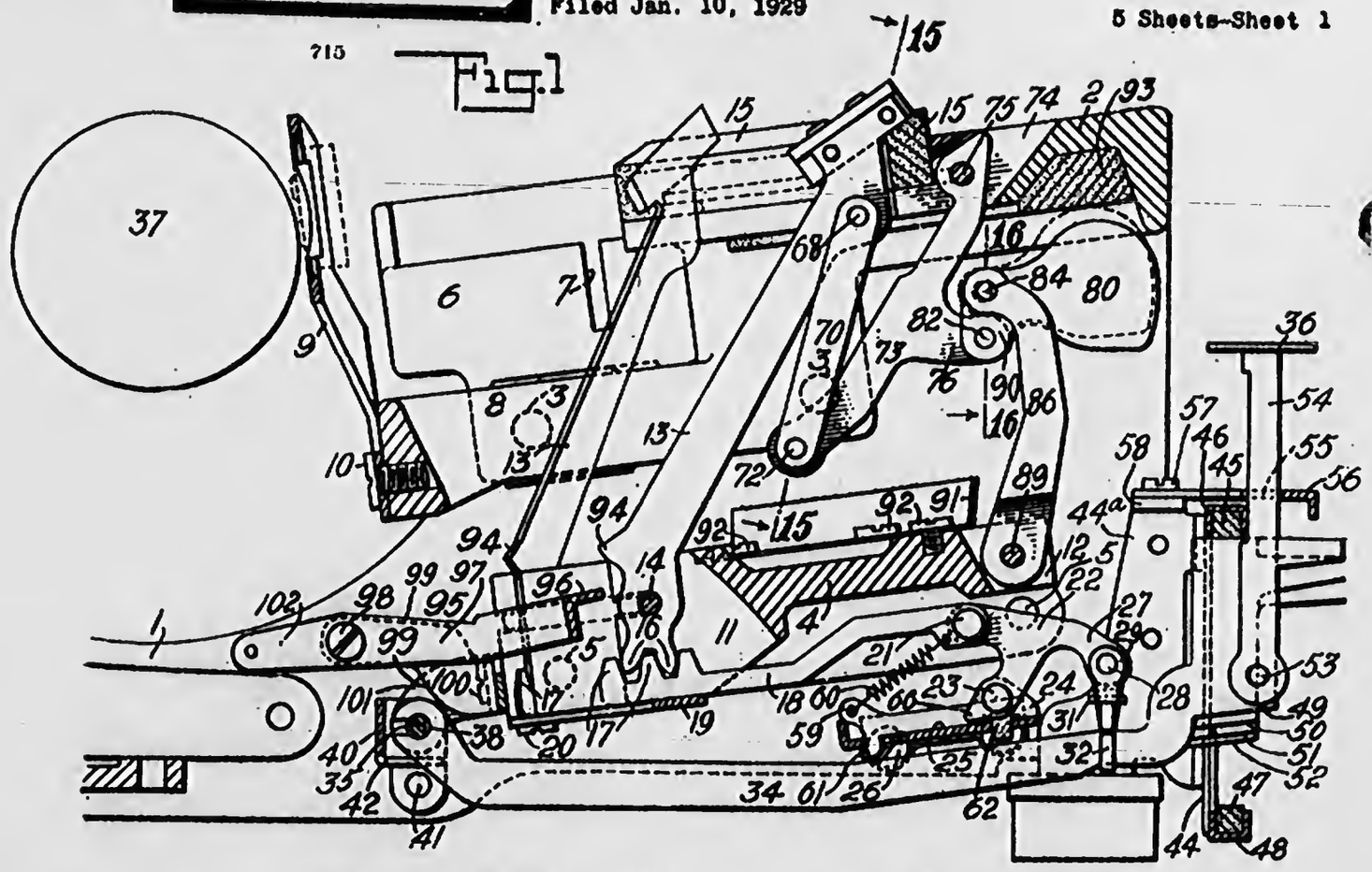

Fig. 3

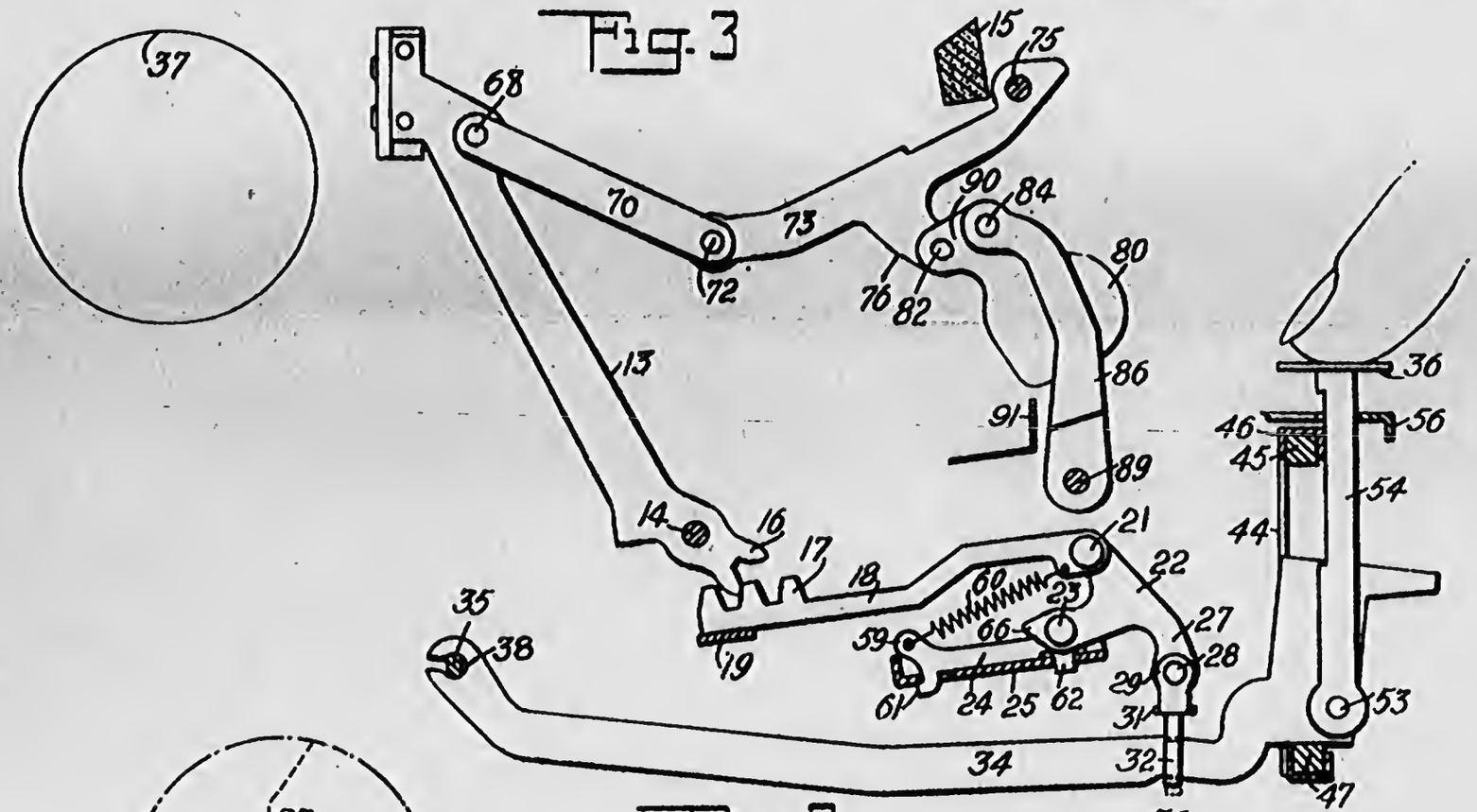

Fig. 3

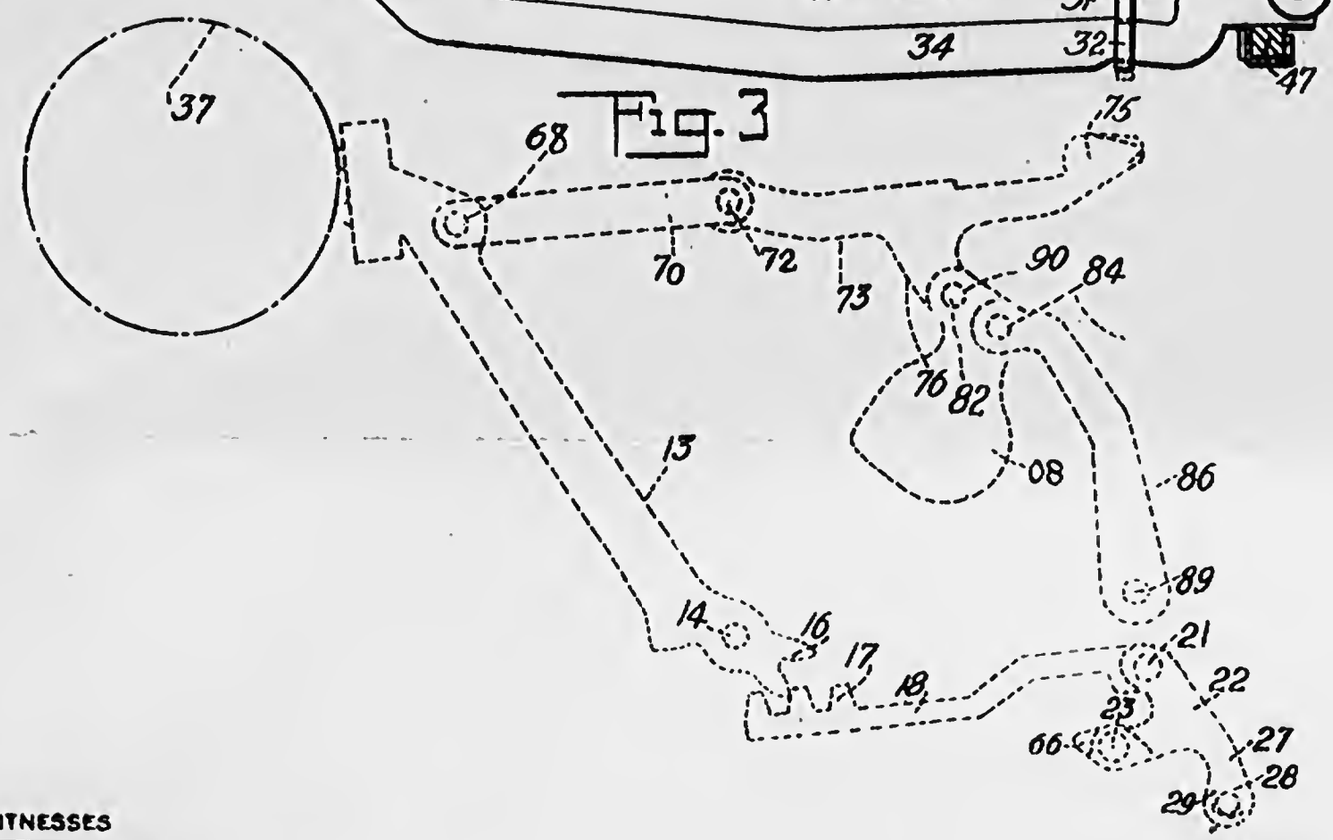

WITNESSES

Elsie J. Duggan

Charles E. Smith

INVENTOR

G. G. Going

BY Barton A. Bean, Jr.

ATTORNEY

716

612

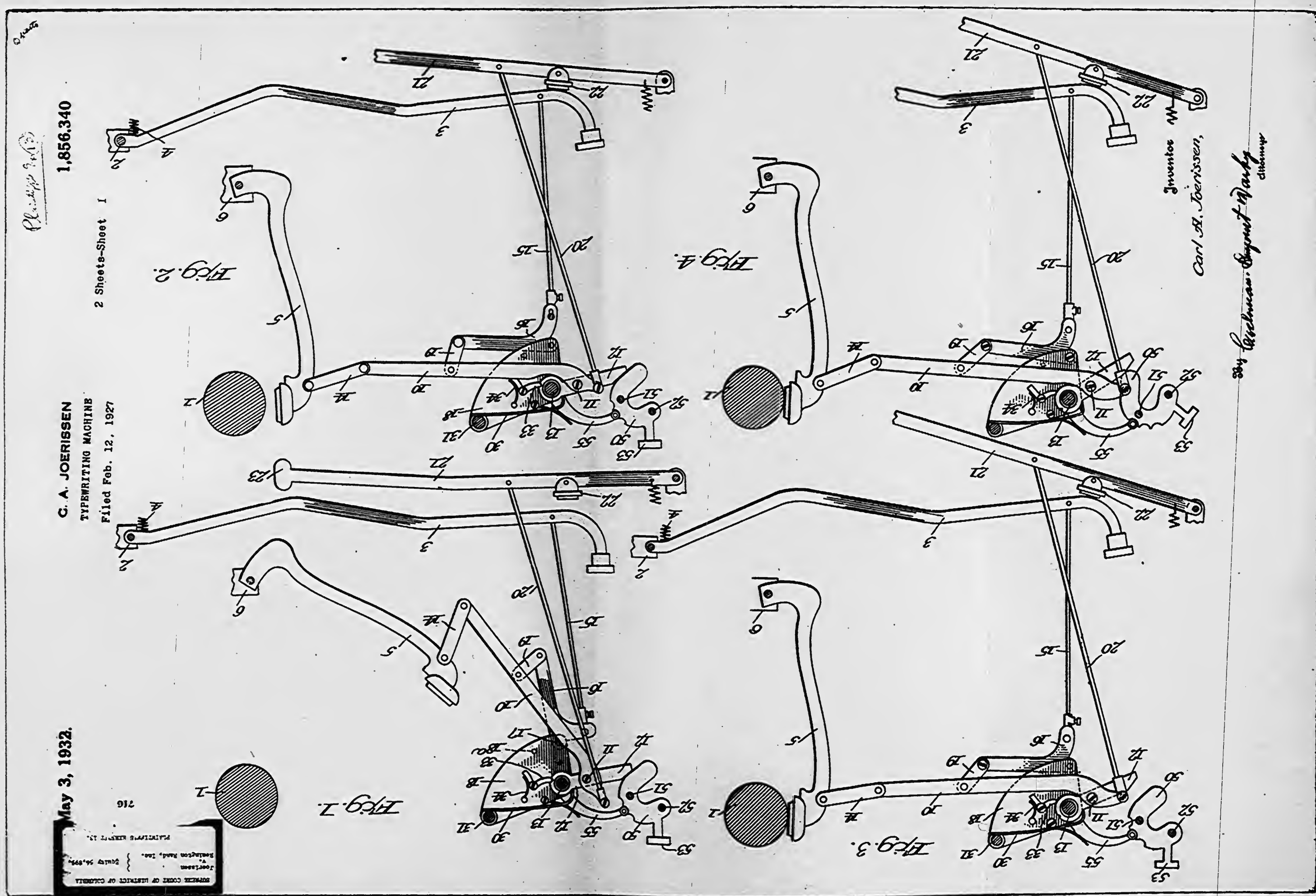
C. A. JOERISSEN
TYPEWRITING MACHINE
Filed Feb. 12, 1927
2 Sheets-Sheet 1
1,856,340
May 3, 1932.
Fig. 1.
Fig. 2.
Fig. 3.
Fig. 4.
Inventor
Carl A. Joerissen,
By Cushman, Darby & Cushman
Attorneys

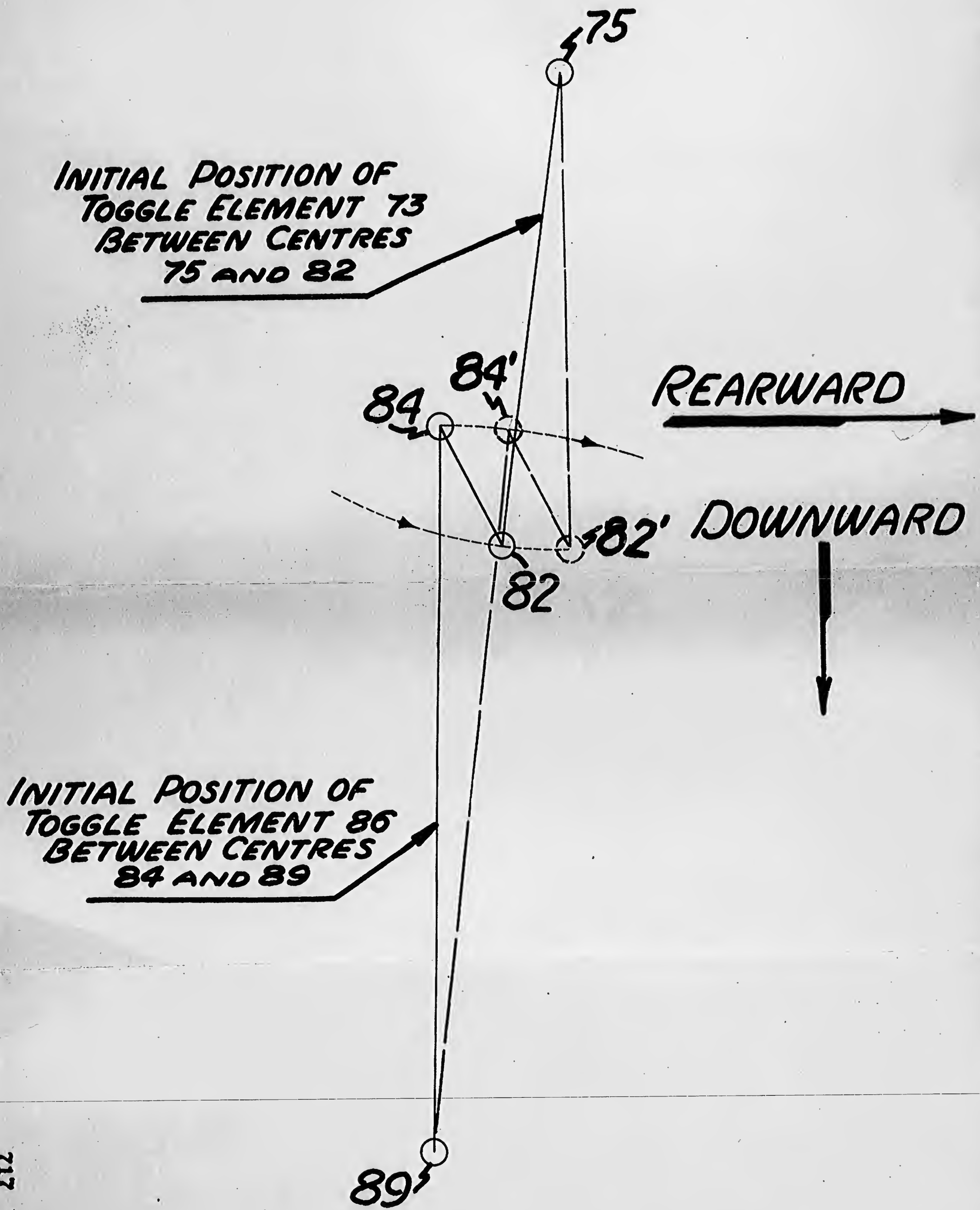
75
INITIAL POSITION OF TOGGLE ELEMENT 73 BETWEEN CENTRES 75 AND 82
84'
84
REARWARD
82'
DOWNWARD
82
INITIAL POSITION OF TOGGLE ELEMENT 86 BETWEEN CENTRES 84 AND 89
89

SUPREME COURT OF DISTRICT OF COLUMBIA.

Joerissen
v.
Remington Rand, Inc. } Equity 56,895.

PLAINTIFF'S EXHIBIT 15.

718

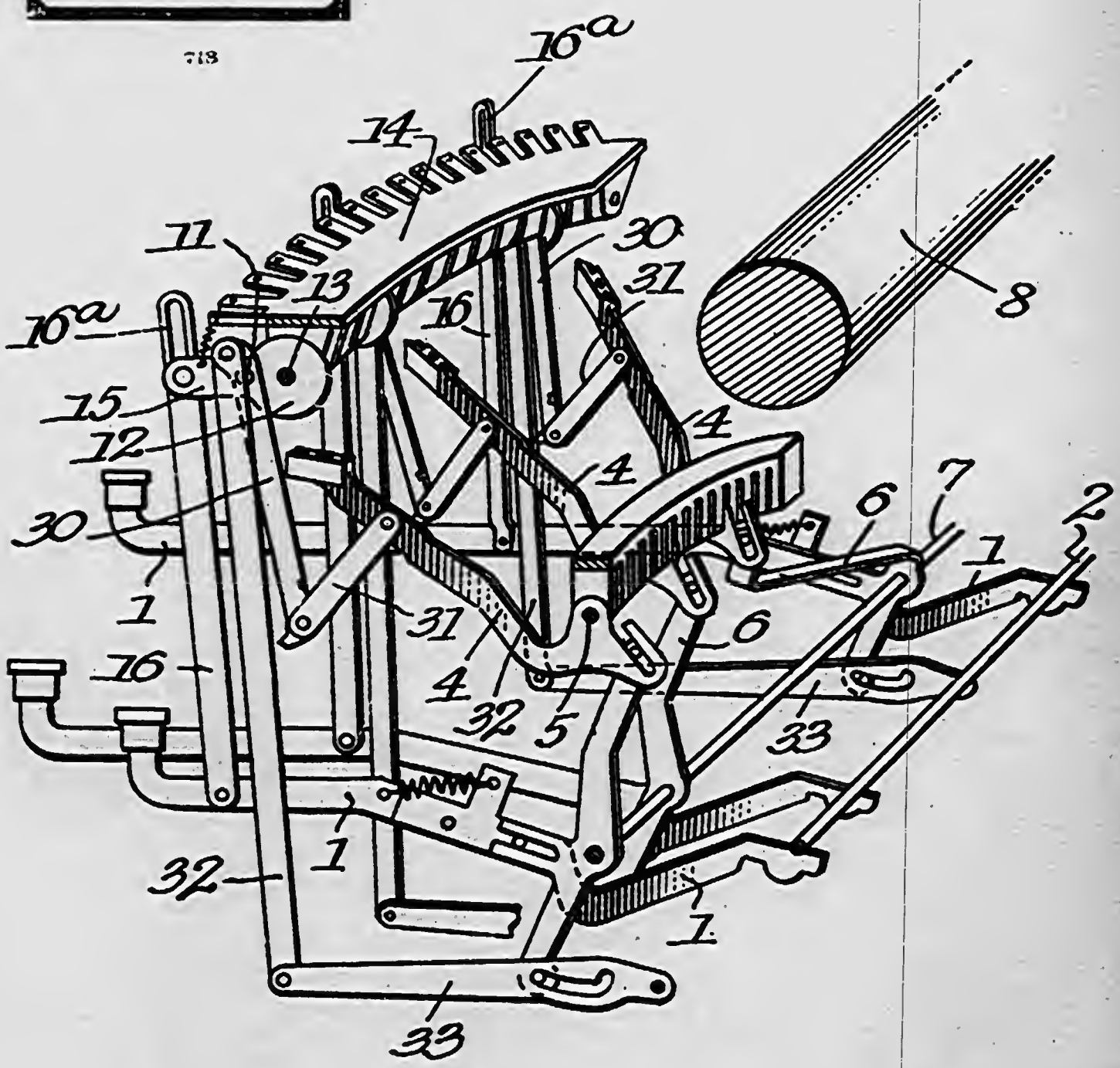

1921 NOISELESS PORTABLE

KEY ACTION IN REST POSITION.

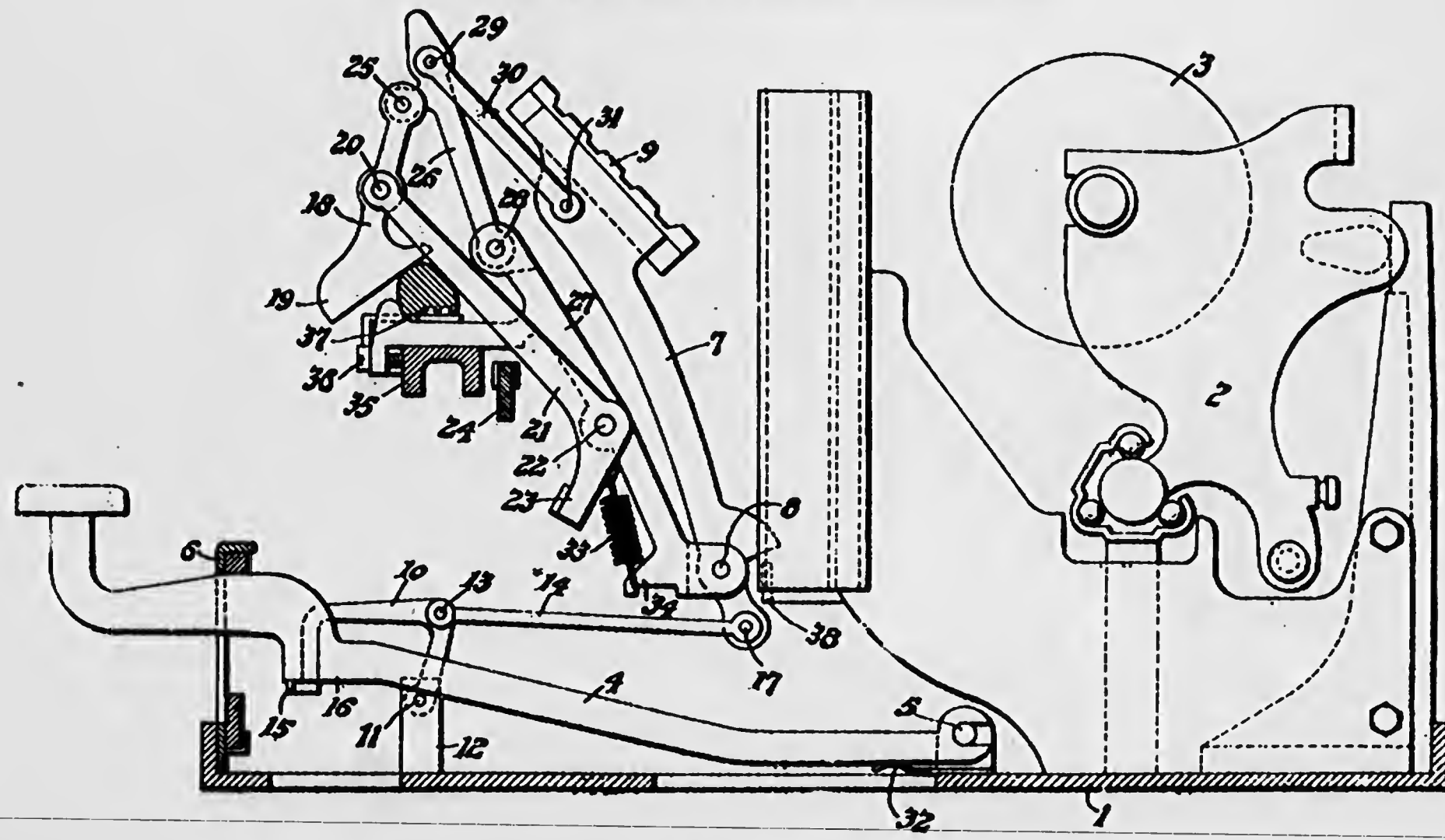

Fig. 1

GOING PATENT 1,471,153

1921 NOISELESS PORTABLE

KEY ACTION WITH KEY LEVER ARRESTED & TYPE BAR MOVING TOWARD PLATEN.

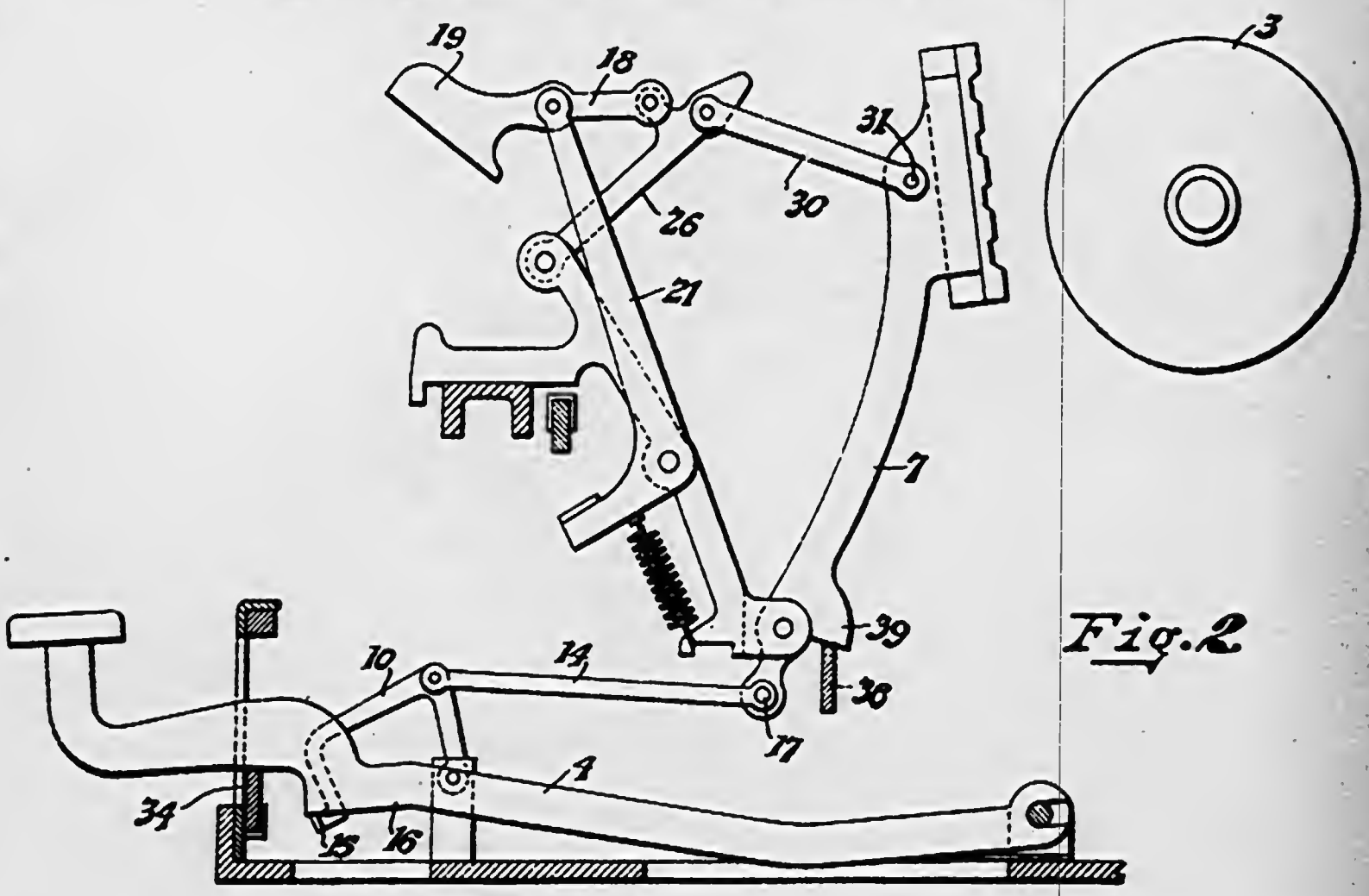

Fig. 2

GOING PATENT 1,471,153

1921 NOISELESS PORTABLE

KEY ACTION IN PRINTING POSITION.

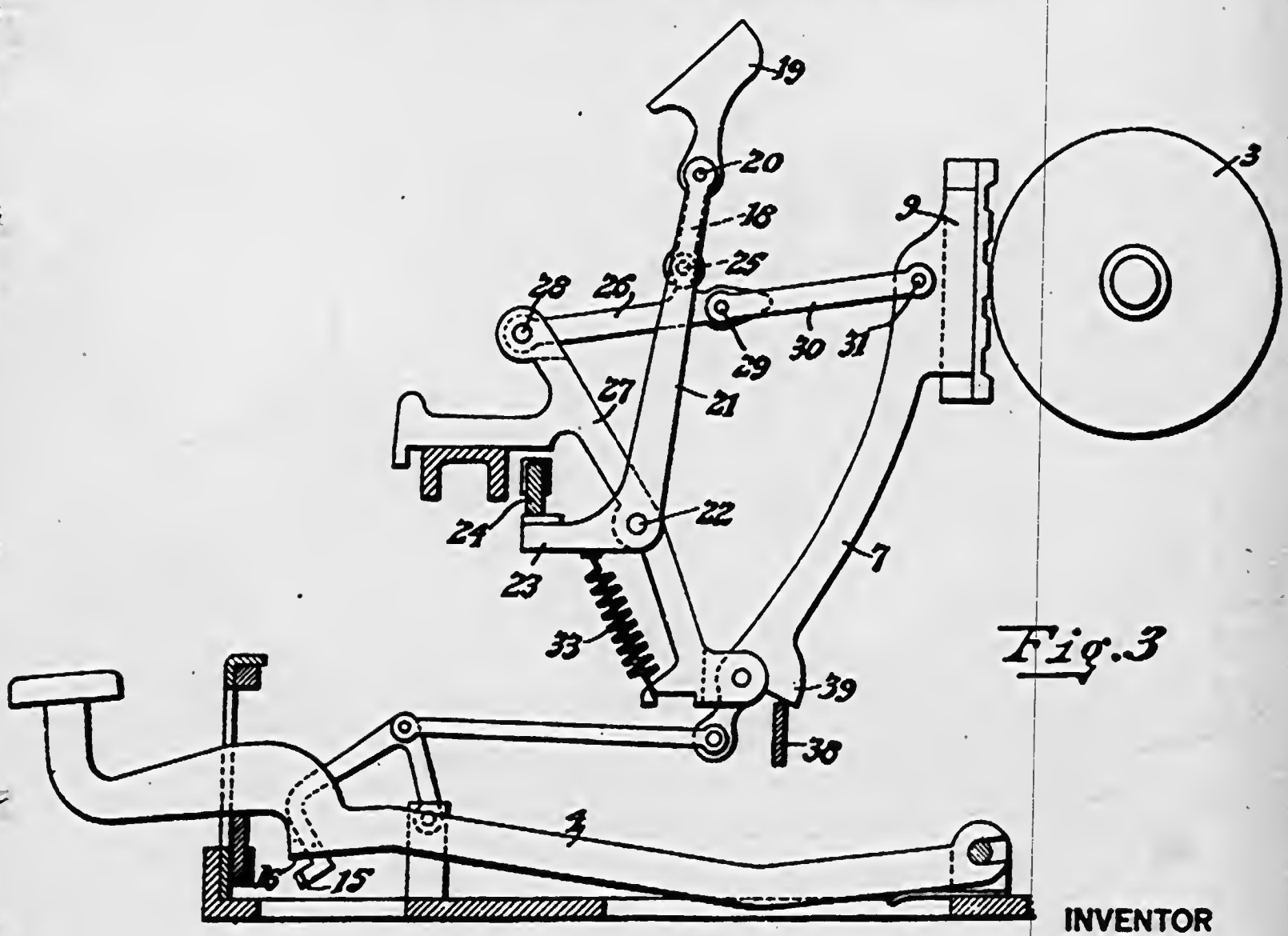

Fig. 3

INVENTOR

GOING PATENT 1,471,153

REMINGTON NOISELESS PORTABLE

KEY ACTION IN REST POSITION.

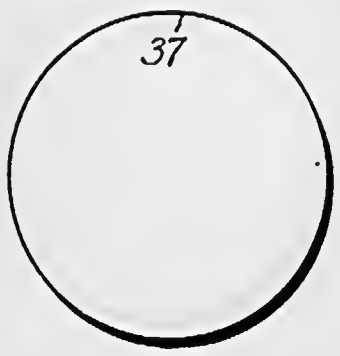

Fig.1

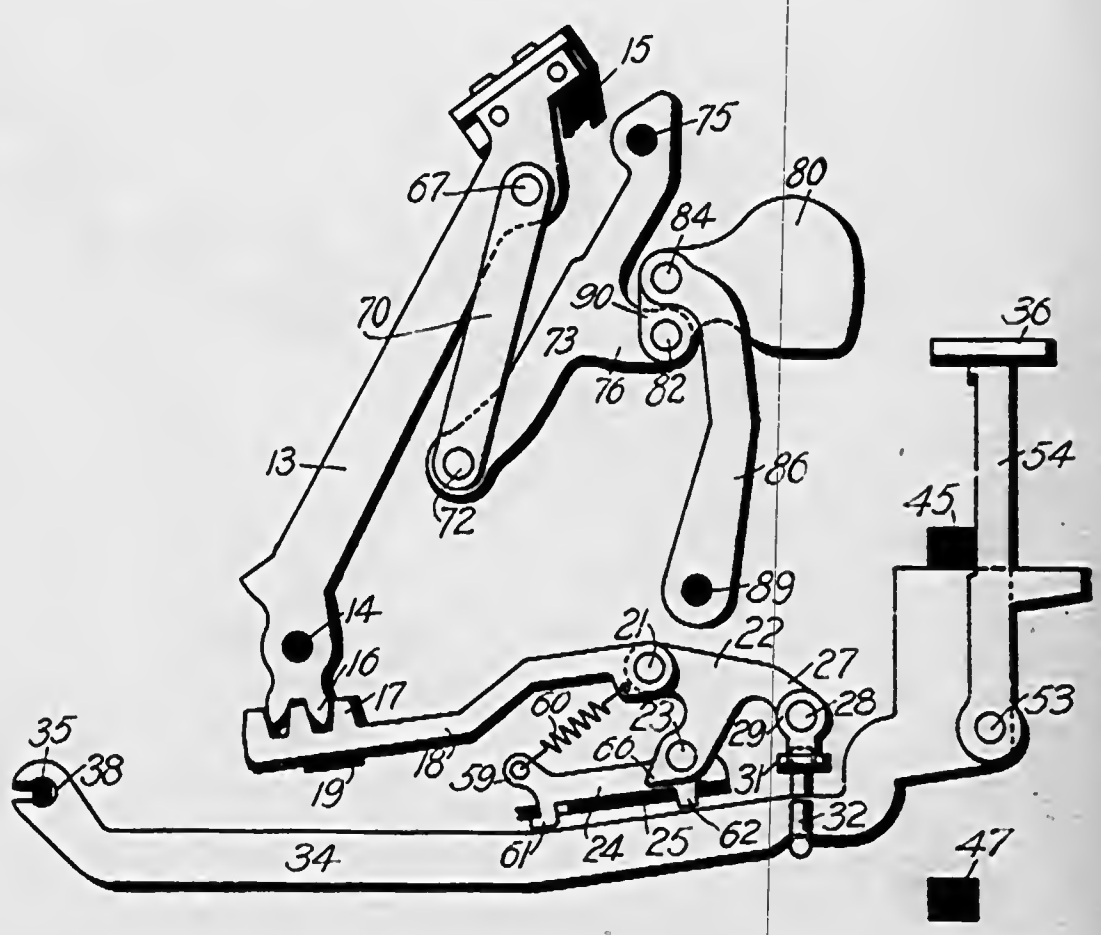

GOING PATENT 1,908,140

REMINGTON NOISELESS PORTABLE

KEY ACTION WITH KEY LEVER ARRESTED & TYPE BAR MOVING TOWARD PLATEN.

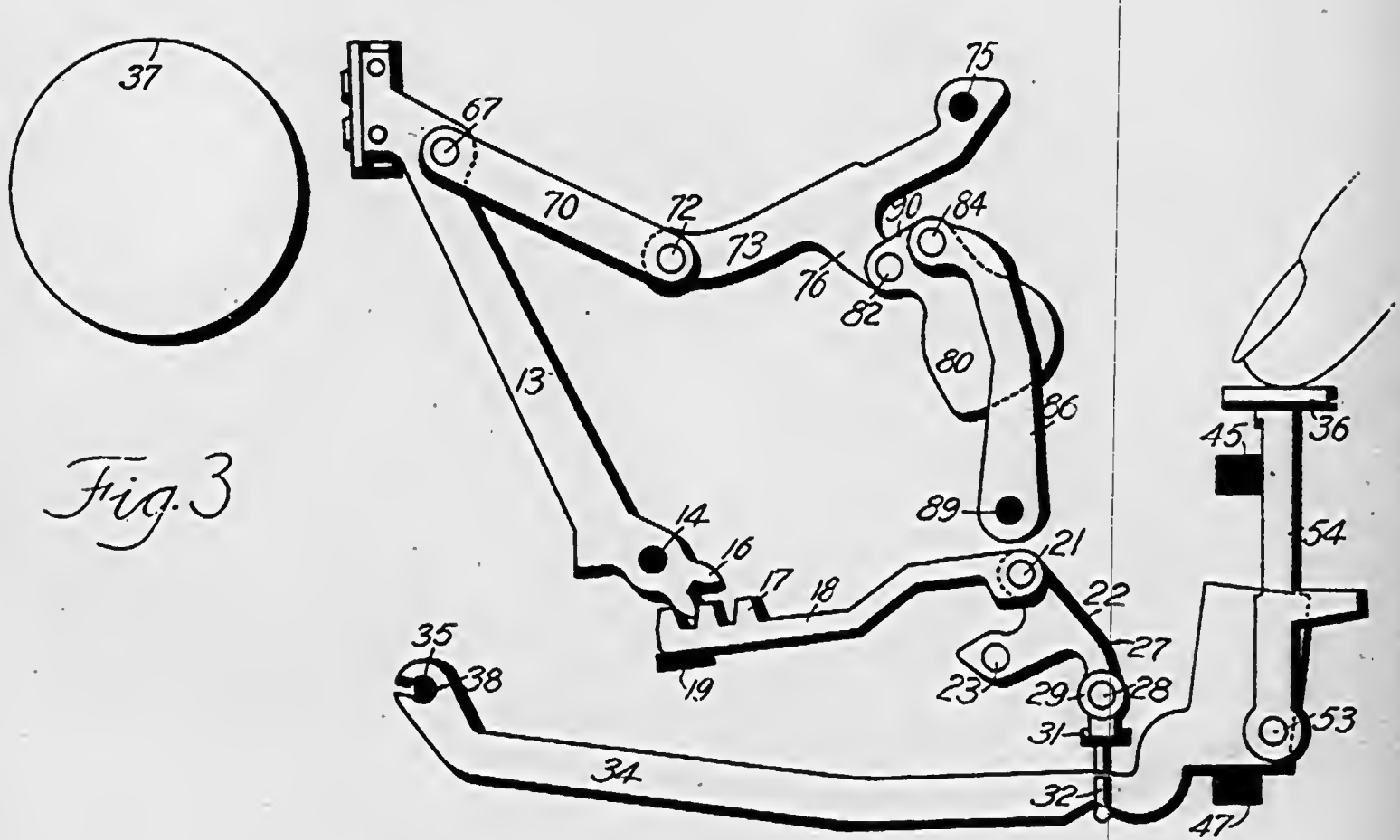

Fig. 3

GOING PATENT 1,908,140

REMINGTON NOISELESS PORTABLE

KEY ACTION IN PRINTING POSITION.

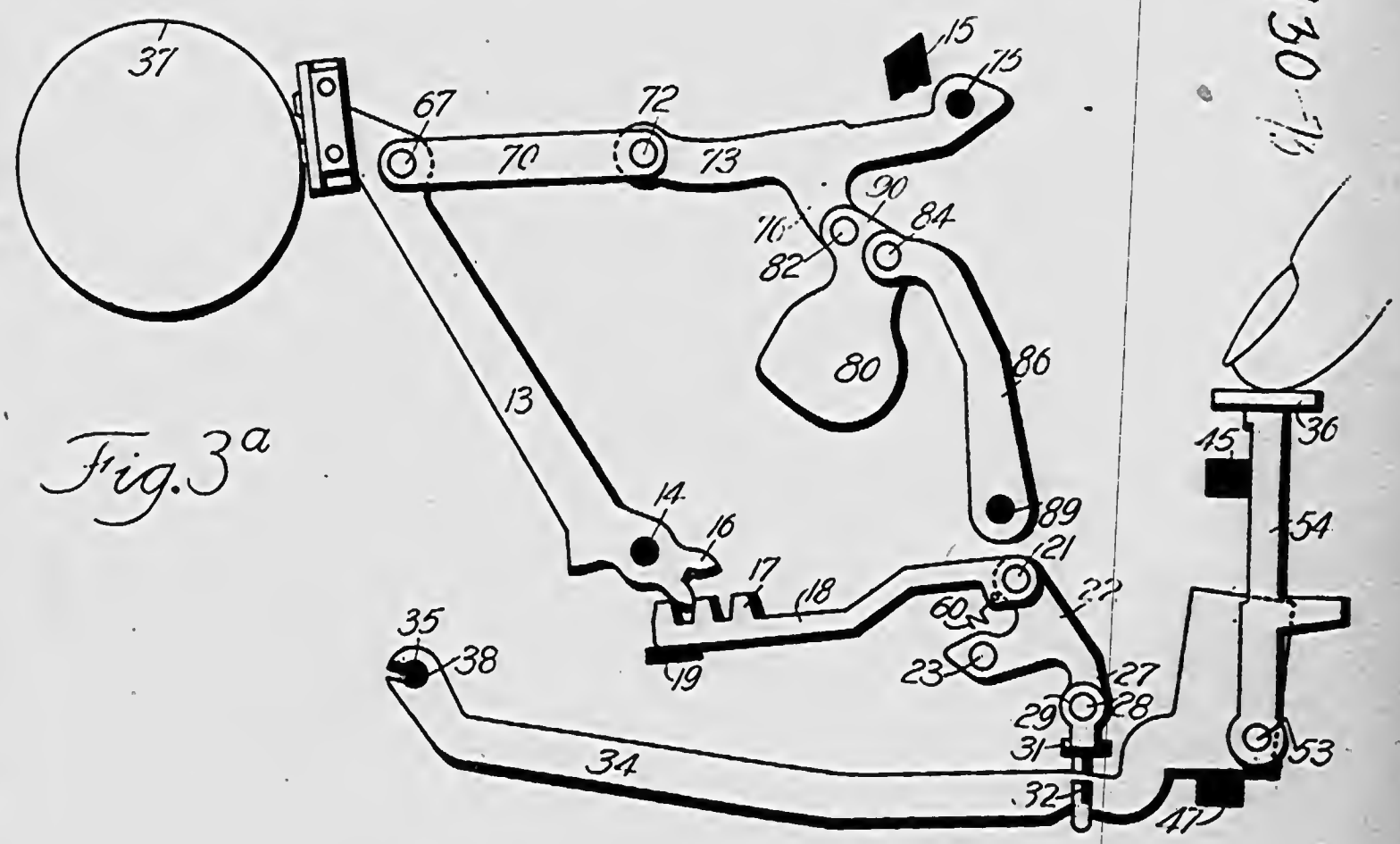

Fig. 3a

GOING PATENT 1,908,140

622

Property of F. C. Benner. Please return.

WHISPERS

Def E4 (K)

A LETTER
from
SEWARD PROSSER
President Bankers Trust Co.

1

THE
STILL SMALL VOICE
by
HEYWOOD BROUN

DECEMBER
NINETEEN HUNDRED TWENTY ONE

WHISPERS

from The NOISELESS *Typewriter*

Vol. 1 DECEMBER, 1921 No. 3

A Landmark

THE attention of our readers is called very particularly to pages eight and nine of the present number of "*Whispers*". On these two pages will be found a kind of evidence which never fails to carry weight—the evidence which is represented not by words and by claims, but by significant, unescapable facts. In advertisements and through the statements of our sales force we have proclaimed that The Noiseless Typewriter is the last and best word in writing machines. We have made statements, we have advanced arguments, we have grown eloquent and sometimes rather breathless in preaching the gospel of the quiet office and of the machine that makes the office quiet.

When you reach these two pages, in the course of the careful persual which we bespeak, you will find that they contain no rhetoric and no formal argument. They are filled with two lists and that is all. But when you come to scrutinize these lists you will find that they are made up of names that cannot fail to arrest attention. In them will be found the justification of the long effort which has led up to the perfecting of The Noiseless Typewriter, and in them also will be found a large part of the reward that has come to those who believed that it was a useful service to remove from business offices the clatter of the machine shop. For these two lists—the one of notable institutions and the other of notable individuals—prove beyond all possibility of doubt or contradiction that The Noiseless is being welcomed and adopted by institutions of national and international greatness, as well as by many whose names are known to millions as leaders of finance and business.

It is an old and trite proverb, but "the proof of the pudding is in the eating." If you come back for more you are pleased, and if you come back often you are greatly pleased. The first of these lists is made up of institutions and companies numbering one hundred, who have purchased more than ten thousand Noiseless Typewriters, or an average of above one hundred each. We have always maintained that while The Noiseless is invaluable to executive officers who need to have their secretaries close at hand, it wins its most signal triumph in the large, open office. No one who has ever heard twenty-five or fifty hammer-blow typewriters at work in a single room is likely to forget the nature of the din they make, and those who seek to work amid such a din cannot fail to realize how it reduces their power to concentrate. The Noiseless Typewriter is not for the President's use only. It exists for the benefit of the whole office, and to read the first of these two lists is to gain an indelible impression regarding the progress which The Noiseless is making among the great institutions. In all cases, the original attitude was one of hope mingled with scepticism. Thus in almost every case the original purchase was one of a single machine, and the first twenty machines often represent a dozen or more transactions. But steady "repeat orders" tell the story, and it is only by a great many "repeat orders" that such an aggregate as that given is made up.

With regard to the list of celebrated executives who are cited as users, the only comment which need be made is that The Noiseless begins automatically at the top.

I have entitled this word of preface, "A Landmark," and in the annals of our enterprise each of these lists is indeed a landmark. By the time a typewriter company can show such lists as these, it may be said to have survived with some credit its baptism of fire. We hope that the information therein given may prove as gratifying to our friends outside the organization as it is to those in our own ranks who have worked so hard and so loyally to achieve this result.

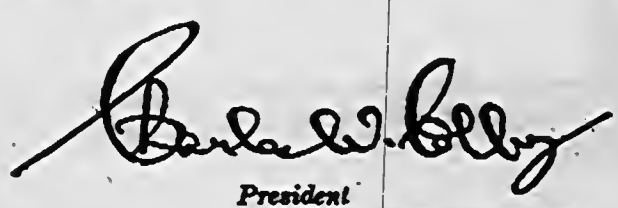

President
The Noiseless Typewriter Co.

The PRESIDENT of the BANKERS TRUST COMPANY SPEAKS FOR The NOISELESS

BANKERS TRUST COMPANY

[illegible]

[illegible]

[illegible] WALL STREET
NEW YORK,
November 23, 1921.

Dr. C. W. Colby, President,
Noiseless Typewriter Company,
253 Broadway,
New York, N.Y.

My dear Dr. Colby:

I remember some time ago advising you to come down to our home office to see installed there a "battery" of Noiseless Typewriters.

We have adopted the system of having the Secretary of each Officer back of his desk, receiving telephone messages and doing stenographic and typewriting work. These are so located in this office of ours that it is only made possible due to the fact that we were able to avail ourselves of your Noiseless machines which operate without disturbing any of us. Before we had your machines we found it necessary to have our stenographic force in entirely separate rooms in order to avoid the noise which it would have been quite impossible to have at an officer's desk.

I understand that you wish to use this letter in your house organ. I am very glad to write it to you with that understanding and I feel in writing it that if I have in any way been helpful to you, you having been so helpful to me in the past, through these very machines, I shall be very pleased.

Yours very truly,

President.

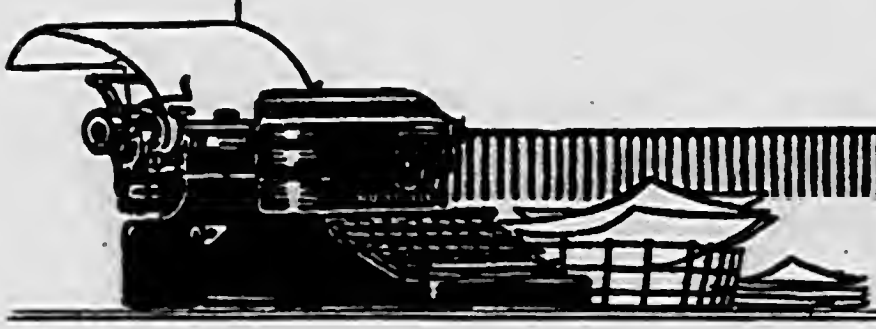

A Short History of the Noiseless Typewriter

After the manner of the fiction magazines, we furnish a brief preface to indicate what has appeared in previous installments of the serial. It will be recalled that in our first number we sketched the main stages in the history of writing machines, and that in our second number we outlined the history of The Noiseless from 1896, when the idea first took definite form, to 1909, when the first effort was made to build a Noiseless Typewriter for the market—the cam machine which while wholly unlike The Noiseless Typewriter in its essential action was nevertheless the forerunner of our present machine. We now resume the narrative where it was interrupted, namely in the Spring of 1909.

III.

CYRUS FIELD failed in his first effort to lay the Atlantic Cable. The first effort to place a noiseless typewriter on the market was also unsuccessful. None the less both enterprises went forward.

To explain in full detail why misfortune overtook the company which attempted to build and sell the cam machine would be to tell a long story—a story made up of courage, perseverance and good faith contending against inherent difficulties which were only disclosed as manufacture went forward and the product was actually placed before the public. While it is impossible within present limits to describe all the factors which entered into the problem, some of them can be stated quite briefly and clearly.

First of all there is the factor which is represented by psychology—one of the most potent factors in the typewriter business. The typewriter is a very intimate machine. The man or woman who operates it becomes familiar with the particular instrument employed and if it is at all satisfactory there springs up a subconscious sense of loyalty which immediately asserts itself when it is proposed that the typewriter already used be taken out and a different kind substituted. One inevitable consequence of this feeling is that every new typewriter which appears is subject to rigid scrutiny and is severely criticized for shortcomings which in the familiar typewriter would be accepted and passed over.

The Noiseless Typewriter in its primitive form of a cam machine had a touch which was heavier than that of the hammer-blow typewriters and an action which was somewhat too slow. In cases where the typist was willing to learn a new touch and the employer was satisfied to accept a somewhat smaller output of work in order to get relief from noise, the original Noiseless Typewriter was usable, but it had distinct limitations. If it is asked why these were not discovered before the machine was placed on the market, the reply is that the features of excellence which it actually possessed awakened a degree of enthusiasm even among disinterested and impartial experts which led them to minimize its shortcomings, or to believe that these shortcomings would be passed over in view of the advantages offered. But the experts whose opinion was taken were more progressive and less prejudiced than the rank and file of typists whose favor was a condition precedent to commercial success. Impressed by the limitations of the cam machine rather than by its strong points, they turned their thumbs down

BESIDES the difficulties which arose from the structure of the machine itself, there were further difficulties connected with the manufacture of a mechanism which required great precision alike in the making and assembling of the parts. To meet the criticisms offered by typists, repeated attempts were made to modify the design of the machine, and some of these were sufficiently promising to encourage the Directors to raise considerable amounts of additional capital for the purpose of carrying the enterprise forward in the face of many severe disappointments. But from 1909 to 1912 it proved impossible to produce the cam model of the noiseless typewriter in commercial quantities at a cost which would enable the company to meet its expenses. The machine was not very far from being right, but it was sufficiently wrong to frustrate success

Short History of The Noiseless Typewriter — (*Continued*)

although a group of intelligent men stood behind it loyally and raised large sums of money in the hope of overcoming the difficulties which were encountered. From the first to last the cam noiseless typewriter illustrates the force of Browning's phrase:

> "The little more and how much it is:
> And the little less and what worlds away!"

The cam machine was ninety or ninety-five per cent. right, but what it lacked was enough to involve failure.

However, out of all the toil and trouble which marked the efforts of the first Noiseless Typewriter Company, there came one solid result. In 1912, Mr. N. H. Anderson, one of the Company's engineers, invented a type action which rendered it possible to eliminate cams wholly from the machine, at the same time accelerating the speed very greatly and lightening the touch to a marked degree. This invention, which centres in double toggle, or momentum accumulator, action at once cured the difficulties which had been caused by the cams. During the course of 1912 enough of these new machines were produced to make it clear that the double toggle structure did indeed provide a remedy for the troubles before encountered. The next step was to bring this new machine to the market.

By this time the first Noiseless Typewriter Company had come to the end of its financial resources, and during 1913, a Receiver was appointed. At the same time a Bondholders' committee was appointed to co-operate with the Receiver in working out a plan of reorganization. During the Spring of 1914 fresh capital was raised by the Directors of the first Noiseless Typewriter Company, by far the greater part of this being provided by the shareholders of that Company. In other words, this reorganization did not represent a sale of assets to strangers but rather a fresh subscription of funds by those who had for years been associated with the enterprise. This is illustrated by the fact that immediately after the reorganization of 1914 more than ninety per cent. of the stock of the new Company was held by shareholders of the old company. Thus a real, organic unity was preserved. Believing that the new type action would solve the difficulties presented by the cam structure, those who had faith in the enterprise subscribed or raised fresh funds and went forward.

The President of the first Noiseless Typewriter Company was W. Caryl Ely, who worked with the utmost devotion and determination to overcome inherently insuperable obstacles, and who occupies a foremost place in the annals of The Noiseless Typewriter. The first President of the present Noiseless Typewriter Company was Joseph Merriam, of Middletown, Connecticut, who had been one of the most active, useful members of the first company, and whose assistance at the moment of reorganization had proved most valuable. J. A. Ruffin was made Works Manager, and E J. Sheehan, Sales Manager.

During the nine months from June, 1914 to March, 1915, tools for the new machine were in process of construction, and during the remaining nine months of 1915. the new product was being tested out carefully in small quantities. In fact, less than five hundred machines were sold during 1915. In 1916 a considerably larger product was marketed but no real effort was made to crowd sales, it being the policy of the Board to make sure that the machine was right before trying to sell it in a large way. As a result of the experience gained during 1915 and 1916, a new model was brought out at the beginning of 1917—the No. 4 model which represents The Noiseless Typewriter in its first fully commercial and satisfactory form. This machine, which is based upon double toggle action as refined and developed by the experimental department during 1915 and 1916, has brought The Noiseless Typewriter Company to the point which it has now reached. Much credit for improvement in design during the period of the present company is due to G. G. Going, the Chief Engineer. Of late Mr. Going's attention has been largely occupied with the development of the Portable Noiseless, of which a description will be found in another part of the present number.

During the four years 1917-1920, the sales of The Noiseless Typewriter increased not only steadily, but with a rapidity unequalled by any other typewriter during the corresponding period of its development—that is to say during the first four years from the time when the machine was brought to the point where it could be said to be a fully commercial product. At the present time The Noiseless Typewriter enjoys a status and possesses prospects which are known to all readers of "*Whispers.*" For some time past the President of The Company has been Dr. C. W. Colby, and in August last the organization was greatly strengthened by the addition of A. F. Hebard as Vice-President.

The STILL SMALL VOICE

by Heywood Broun

MANY people wonder at the violence of newspapers. They have noticed that the latest murder is always hailed as the most sensational, the opposition's candidate as the deepest dyed of villains, the new popular success on Broadway as the greatest play of the generation. It is generally believed that partisanship and yellow journalism are the elements which make for over-statement in the daily press, but as a matter of fact these are mere incidentals. The blame belongs to the typewriters.

Machines get hard usage in a newspaper office. They creak and groan with the record of earthquakes, and the death of kings, and the coming of wars, and discoveries, and scandals, and the trumpet calls of reformers. Bye and bye the veteran machine begins to grumble. The world is too much with it. Cynicism about the affairs of man descends upon it and the keyboard begins to take on a sneer.

Unfortunately, the typewriter does not sneer in silence. When a young reporter, flushed with enthusiasm, takes off his coat and sits down to work his machine it is never his servant, but instead is an open and avowed enemy. My old warhorse had only one phrase at its command, but it shrieked this at me incessantly. Glowing with enjoyment over a new play I would begin, "Ethel Barrymore, one of the most eloquent actresses of our day, was seen last night at the Empire Theatre in Declasse."

"Is that so!" the typewriter would roar mockingly in my ear.

Annoyed, I would begin again with, "Ethel Barrymore, the greatest actress of our day—"

A raucous laugh would assail me at this point and again I would hear the inevitable and maddening comment from my machine, "Is that so!"

Furious, desperate, oblivious of reason and judgment, my next opening always came with every ounce of power from back and shoulders. Mind gave way to muscle in the exigencies of the situation. My only thought was to drown out the comments and objections of the typewriter. With a swish and a bang out would come the lead, "Ethel Barrymore, the greatest actress who ever lived or ever will live—"

And so the story would go on, rising to ridiculous superlatives as I attempted to rush along and show the mocking machine which of us was the master. Of course, remorse always came in the morning. I never failed to realize that I had said far more than I intended. Excuses were of no avail. I did not have the courage to confess that I had been taunted into my excesses by nothing more than the rattle and roar of a demon machine supposedly harnessed as a labor-saving device. A bad workman, according to the saying, always complains of his tools. But the newspaper man is something more than a workman. A little of the artist is in him. He has nerves and they are susceptible to the demoralization induced by racket.

Of course, the longer he remains chained to his machine the smaller is that portion of him which is sheer artist. After much gazing at his sneering and cynical typewriter he begins to grow like it. Mockery becomes habitual because he wants to be the first to sneer. He hopes in this way to disarm the criticism of the keyboard.

Probably The Noiseless has come into my life too late to save my soul. The struggle to write with sufficient violence to drown out the roar of an old and loose machine has marked me for life. But at least my declining years promise to be peaceful. The Noiseless lets me tell the story as I please. It does not chatter or interfere. It minds its own business. Words, even inept ones, fall as gently upon it as raindrops on the velvet cloak of Sir Walter Raleigh. In the old days I never attempted similes because the typewriter protested too much. Now I can embroider my style if I choose. There is no perpetual censor in front of me, but only a mute and seemingly agreeable slave. I have construed the silence of The Noiseless Typewriter as consent.

Indeed, a warm affection has grown up between us. Late at night when the presses are stilled and everybody has gone home and silence reigns under the gilded dome of the *World*, I sometimes fancy that I can hear a faint whisper coming up to me from the desk. It is a message so modulated that I am not certain of its purport. But I think it says, "'ataboy!"

WHISPERS
PUBLISHED
By
The Noiseless Typewriter Co.
at 253 Broadway, New York
H. J. Lance . . . . . *Editor*

* * *

IT has been difficult to make all employers of labor realize that there is no greater enemy of efficiency than unnecessary noise. The noise of machinery, the din and bustle of the warehouse have been considered necessary parts of the daily routine. That this clatter, this din are eating away profits is not so readily recognized for the reason that the effect of noise upon the human machine has not been taken into serious consideration. Through the columns of this publication, we are endeavoring to present to you in a logical, comprehensive manner, the arguments against, and the harmful effects of, noise on the human nervous system.

* * *

Anti-Noise Day

Professor Henry J. Spooner, head of The Polytechnic School of Engineering, lecturing recently at Blackburn, Lancashire, England, on "Noise and Fatigue" suggested that we keep December 5th as an annual "Fatigue Elimination Day" concentrating our attention especially on avoidable noises.

This movement which has for its object the reduction or elimination of avoidable and unnecessary fatigue in all activities, was initiated in America many years ago according to Professor Spooner.

A standard limit of permissible noise with suitable fines for excess may be rather distant. But at any rate the suppression of many unnecessary noises is an immediately practical proposition. Many others seem inseparable from productive effort. We shall get rid of the worst noises when it is too painful to put up with them any longer.

A Chat with the Operator

"Be not the first by whom the new is tried" is a quotation which portrays the attitude of average humans toward the unfamiliar. But it has long since ceased to be appropriate or timely regarding The Noiseless Typewriter.

* * *

The Noiseless has arrived. Well nigh fifty thousand of these machines are quiet eloquent testimonials of the fact.

* * *

There are many operators, however, educated on the old style four-bank keyboard, who still consider the simpler three-bank keyboard as a serious problem to be solved, instead of looking upon it as a gateway to freedom from noise, ease of operation and lessened fatigue.

* * *

Do you know that one of the largest banks in New York held a speed contest recently among its operators, and the first five places in the contest were won by operators using The Noiseless?

* * *

Do you know that The Noiseless can make as many carbon copies as any other machine, and that we would welcome the opportunity to find one of our typewriters which, with the proper carbon paper and an intelligent operator, will not make as many carbon copies as you can reasonably expect from any writing machine?

* * *

Do you know that the noisy typewriter has become an anachronism in modern business, and that the operator on a Noiseless machine qualifies herself for a secretarial position?

* * *

Do you know that the constant noise of the old style machine has a very definite effect on your nerves, and consequently on your health, and that there is a marked lessening of fatigue at the close of the day's business when The Noiseless is used?

* * *

Do you know that The Noiseless Typewriter is the cleanest machine to handle on the market today? The type does not fill up sufficiently to require cleaning oftener than two or three times a year. There is infrequent need to soil your fingers at all, and the light touch saves the finger nails.

* * *

By a few days' effort, you will be able to open the door to greater efficiency, less fatigue and opportunity for advancement.

To Our Sales Organization

BUSINESS is improving. The spirit of optimism is abroad and with this resumption of confidence there seems to be growing an appreciation of the benefits which the quiet office brings, where work can be done more promptly, more healthfully, more comfortably, and in all respects more efficiently.

Not the least valuable free advertising we receive is from our friends, our competitors, who are striving to emulate us in the sale of the quiet office along with their respective machines.

We should derive a great deal of satisfaction from the fact that two of our competitors have recently presented to the trade new models, which aim to eliminate noise—one of them by a change in design, the other by an external covering.

We have a right to consider both of these as efforts to meet our competition, but neither of them, in our opinion approach, in the one case, the degree of silence, and in the other, the convenience, obtained in the use of the Noiseless. We are able, therefore, to look with complacence upon these efforts to attain the results we accomplished years ago.

That office whose occupants are undisturbed by noisy typewriters is going to plan and perform its work better than the office which is harassed and hampered by noise. The race is won, nine times out of ten by hard, close thinking, and that business which conducts its affairs in the quiet office without the handicap of noise is the one that is going to win in these days of keen rivalry.

The long period of stagnation in business is about to be followed by a new wave of buying. Let us get all of our share of this business and more—and with the utmost energy and enthusiasm spread abroad the glad tidings of the quiet office and The Noiseless Typewriter, achieving the largest measure of success we have yet known.

With best wishes for the Holidays and throughout the New Year, I am,

Faithfully yours,

A. F. Hebard

VICE-PRESIDENT.

December 15, 1921

100 Users

That have purchased in the aggregate more than

10,000 NOISELESS TYPEWRITERS

1 Aetna Fire Insurance Co.
2 American City Company
3 American Cotton Oil Co.
4 American Foreign Banking Company
5 American Metal Co.
6 American Mutual Liability Ins. Co.
7 American Red Cross
8 Anglo-South American Bank
9 Atlantic Refining Co.
10 Atlas Powder Co.
11 Ayer, N. W. & Son
12 Baker-Hamilton Pacific Co.
13 Bankers Trust Co.
14 Bank of Montreal
15 Batten, George & Co.
16 Bonbright, Wm. P. & Co.
17 Boy Scouts of America
18 British American Tobacco Co.
19 British Government
20 Brown Bros. & Co.
21 Cable Piano Co.
22 Camden Fire Insurance Co.
23 Canadian Bank of Commerce
24 Carnation Milk Products Co.
25 Carson, Pirie & Scott
26 Clift & Goodrich
27 Compton, E. C. & Co.
28 Congoleum Co.
29 Continental Insurance Co.
30 Converse & Co.
31 Cunard Steamship Co.
32 Detroit Edison Co.
33 Dupont de Nemours
34 Eberhard, George F. & Co.
35 Employer's Liability Assurance Co.
36 Fairbanks, Morse & Co.
37 Farmers Loan & Trust Co.
38 Farwell, J. V. & Co.
39 Federal Reserve Banks
40 Fidelity & Casualty Co.
41 Fireman's Fund Insurance Co.
42 Fort Dearborn National Bank
43 Funk & Wagnalls
44 General Electric Co.
45 General Motors Co.
46 Globe Indemnity Co.
47 Grace, W. R. & Co.
48 Guaranty Trust Co.
49 Hall, F. B. & Co.
50 Home Insurance Co.
51 Ingersoll Rand & Co.
52 Insurance Company of North America
53 Irving National Bank
54 James, F. S. & Co.
55 Jewel Tea Co.
56 Johnson & Higgins
57 Liberty Mutual Insurance Co.
58 Liverpool, London & Globe Ins. Co.
59 Leach, A. B. & Co.
60 MacMillan Co., The
61 McFadden, Geo. H. Bros.
62 McGraw Hill, Publishing Co.
63 Marsh & McLennan
64 Mercantile Bank of the Americas
65 Millers Mutual Casualty Insurance Co.
66 Munson Steamship Co.
67 Mutual Life Insurance Co.
68 National City Bank & National City Co.
69 National Bank of Commerce
70 National Bank of the Republic
71 National Geographic Society
72 New York Edison Co.
73 New York Times
74 Ocean Accident & Guarantee Co.
75 Paige-Detroit Motor Co.
76 Roeblings, J. A. & Co.
77 Rollins, Burdick & Hunter
78 Royal Indemnity Co.
79 Seattle Hardware Co.
80 Society of Automotive Engineers
81 Standard Oil Co.
82 Starrett, L. S. Company
83 State Charities Aid Society
84 State of New Jersey
85 Street Railways Advertising Co.
86 Straus, S. W. Co.
87 Texas Co.
88 Title Guarantee & Trust Co.
89 Turner Construction Co.
90 Union Trust Co. (Chicago)
91 United States Chamber of Commerce
92 United States Government
93 United States Steel Co.
94 United States Rubber Co.
95 Vacuum Oil Co.
96 Waterhouse, Frank A. & Co.
97 Western Union Telegraph Co.
98 Willys-Overland Co.
99 Y. M. C. A.
100 Y. W. C. A.

To our many friends whose names do not appear above, we regret that lack of space prevented us from extending the list.

100 Famous Men

Whose letters are written on

The NOISELESS TYPEWRITER

1 J. E. Aldred, Pres. Pennsylvania Water & Power Co.
2 James S. Alexander, Pres. National Bank of Commerce, New York
3 James R. Angell, Pres. Carnegie Foundation.
4 J. Ogden Armour, Pres. Armour & Co.
5 Chellis A. Austin, Pres. Merc. Trust and Deposit
6 R. L. Austin, Chairman Federal Reserve Bank, Phila.
7 F. Wayland Ayer, Pres. N. W. Ayer & Son.
8 Stephen Baker, Pres. Bank of Manhattan Co.
9 Edward W. Bok, Pres. Acad. of Music, Phila.
10 W. H. La Boyteaux, Pres. Johnson & Higgins
11 James Brown, Pres. Brown Bros.
12 Mortimer Buckner, Chairman Board of New York Trust Company
13 Benjamin Bush, Pres. Insurance Company of N. A.
14 Newcomb Carlton, Pres. Western Union Tele. Co.
15 Lewis L. Clarke, Pres. American Exchange National Bank
16 Barron G. Collier, Pres. Street Railways Adv. Co.
17 E. J. Cornish, Pres. National Lead Co.
18 Richard Delafield, Pres. National Park Bank
19 George J. Dowling, Pres. Cable Piano Co.
20 R. H. Dunham, Pres. Hercules Powder Co.
21 Gano Dunn, Pres. J. G. White Engineering Corp.
22 J. V. Farwell, Pres. J. V. Farwell & Co.
23 Robert W. de Forest, Pres. Metropolitan Museum
24 F. B. Foster, Pres. Congoleum Co.
25 Philip A. S. Franklin, Pres. International Mercantile Marine Co.
26 Honorable Jos. S. Frelinghuysen, U. S. Senate
27 H. J. Fuller, Pres. E. & T. Fairbanks Co.
28 H. A. Garfield, Pres. Williams College
29 Harvey D. Gibson, Pres. New York Trust Co.
30 Milton E. Ailes, Pres. Riggs National Bank
31 H. T. S. Green, Pres. International Banking Corp.
32 G. H. Grosvenor, Pres. The National Geographic Soc.
33 Sir Robert Hadfield, Inventor, Manganese Steel, Chairman War Inventions Board, Great Britain
34 A. Barton Hepburn, Chairman of the Board, Chase National Bank
35 Lyman H. Hine, Pres. American Cotton Oil Co.
36 Charles H. Holland, Pres. Royal Indemnity Co.
37 Herbert Hoover, Secretary of Commerce
38 Clarence H. Howard, Pres. Commonwealth Steel Co.
39 Samuel Insull, Pres. Commonwealth-Edison Co.
40 Pierre Jay, Chairman of the Board, Federal Reserve Bank, New York
41 Harry A. Kahler, Pres. American Trust Co.
42 Clarence H. Kelsey, Pres. Title Guarantee & Trust Co.
43 Willard V. King, Pres. Columbia Trust Co.
44 A. F. Kountze, Senior Member Kountze Brothers
45 H. D. Kountze, Pres. Atlantic National Bank
46 Thomas W. Lamont, J. P. Morgan & Co.
47 John G. Lonsdale, Pres. National Bank of Commerce, St. Louis
48 H. R. Louden, American Manager, Liverpool, London & Globe Ins. Co.
49 E. C. Lufkin, Pres. Texas Co.
50 John A. Lynch, Pres. National Bank of the Republic
51 Thomas B. McAdams, Pres. American Bankers Assn.
52 Uzal H. McCarter, Pres. Fidelity Union Trust Co.
53 Cyrus F. McCormick, Chairman Board International Harvester Co.
54 H. C. McEldowney, Pres. Union Trust Co., Pitts.
55 George H. McFadden, Geo. H. McFadden & Bro.
56 James H. McGraw, Pres. McGraw-Hill Pub. Co.
57 Guglielmo Marconi, Inventor of Wireless Telegraphy
58 H. W. Marsh, Marsh & McLennan
59 Theodore F. Merfeles, Pres. Montgomery Ward Co.
60 Eugene Meyer, Jr., Chairman War Finance Com.
61 Albert G. Milbank, Chairman of Board, Borden Co.
62 Charles E. Mitchell, Pres. National City Bank
63 W. Fellowes Morgan, Pres. Merchants Assn. of N. Y.
64 Junius S. Morgan, J. P. Morgan & Co.
65 Peter A. Mortenson, Superintendent Chicago Schools
66 Frank C. Munson, Pres. Munson Steamship Co.
67 Charles F. Miller, Pres. Hamilton Watch Co.
68 Lord Northcliffe, Owner of the London *Times* and *Daily Mail*.
69 E. H. Outerbridge, Chairman of the Port of New York Authority
70 W. P. Paecke, Pres. Chicago Mill & Lumber Co.
71 E. V. Pargny, Pres. American Sheet & Tin Plate Co.
72 Honorable L. C. Phipps, United States Senate
73 Lewis E. Pierson, Chairman of the Board, Irving National Bank
74 S. C. Pirie, Pres. Carson, Pirie & Scott
75 A. C. Pouch, Pres. American Locomotive Co.
76 Henry S. Pritchett, Pres. Carnegie Corporation
77 Seward Prosser, Pres. of the Bankers Trust Co.
78 F. H. Rawson, Pres. Union Trust Co., Chicago
79 C. L. Reierson, Pres. of the Remington Arms Co.
80 Arthur Reynolds, Pres. Commerce National Bank
81 E. W. Rice, Jr., Pres. General Electric Co.
82 Levi L. Rue, Pres. Philadelphia National Bank
83 Benjamin Rush, Pres. Insurance Co. of North Am.
84 Cecil F. Shallcross, Pres. Pennsylvania Fire Ins. Co.
85 Wallace D. Simmons, Pres. Simmons Hardware Co.
86 Eldridge G. Snow, Pres. Home Insurance Co.
87 Ralph Stone, Pres. Detroit Trust Co.
88 S. W. Straus, Pres. S. W. Straus & Co.
89 Benjamin Strong, Gov. Federal Reserve Bank, N. Y.
90 E. A. Stuart, Pres. Carnation Milk Products Co.
91 Gerard Swope, Pres. International Gen. Electric Co.
92 Harry B. Thayer, Pres. American Telephone & Telegraph Co.
93 Samuel M. Vauclain, Pres. Baldwin Locomotive Wks.
94 H. E. Ward, Pres. Irving National Bank
95 R. Emory Warfield, Pres. Hanover Insurance Co.
96 F. O. Watts, Pres. First National Bank, St. Louis
97 Channing M. Wells, Pres. American Optical Co.
98 William H. Woodin, Pres. Amer. Car & Foundry Co.
99 William Woodward, Pres. Hanover National Bank
100 Wirt Wright, Pres. National Stock Yards National Bank

Thoughts on the Noiseless

By J. L. Sweeney
President, The Office Appliance Co., Inc.
Indianapolis, Indiana

The word *Quiet* is full of suggestion. At first glance it may seem to be merely negative. But it means more, far more, than the negation of noise. It is both suggestive and positive. "Study to be Quiet" is an admonition of the Scriptures. It is also an old maxim that we gain power through repose, and what was true centuries ago is just as true now—as true amid the turmoil of modern offices as when the Magi learned wisdom beneath the silent stars. It is to emphasize this fact that Newcomb Carlton—a great, outstanding executive—has said: "I believe in the moral value of quiet."

Leaving the realm of business and turning to the Arts, in song all is quiet save the music, and is it not true that Quiet is the music of the soul?

* * *

In the early days of my effort to sell The Noiseless, I sometimes found it difficult to persuade prospective buyers—who often had never even heard of it—that our machine would continue to prove a practical success. Since there were then no users of long standing in my territory, I used to compile the names of prominent users in other cities and proclaim proudly that "a typewriter is known by the company it keeps." Now I believe it would be more accurate to say that "a Company is known by the typewriter it keeps;" for the time is steadily, inevitably approaching when the noisy, hammer-blow machine will join its "blind" predecessor in those regions which are unilluminated by the light of modern progress.

Sooner or later, others who now decry will become imitators, but they must always trail in the shadow—good followers, but never first! The degree of our leadership is manifest from the fact that after years of competitive effort we are still the producers of the only hard-platen, unmuffled, mechanically noiseless typewriter. As for the future, it is no part of our purpose to fall behind in the race which we have entered with a long lead.

* * *

Modern business has produced many incongruities. For example, what would the average man of business do if his home were as uninviting as his office? His hours at home are few, yet there he demands restfulness and quiet and beauty. The extent to which the "comforts of home" are present or lacking can be measured very exactly by the limit of his means to provide them—and be it known that they satisfy his own vanities and longings equally with those of every other member of his household.

But follow him to the place where he works! There it would almost seem that he has wilfully striven to surround himself with every known device by which he might be able to produce the greatest possible effect of physical discomfort and mental irritability. As an extreme instance it may be pointed out that, until recently, he tolerated even the distracting clatter of hammer-blow typewriters as if the output of work were in direct ratio to the volume of noise created in producing it.

Now, fortunately, we are approaching the quiet era in business—an era which in many ways will be preferable to the outgoing regime. As I see it, the mission of The Noiseless Typewriter is to make business offices brighter and more cheerful, as well as to induce clearer thinking and enlarge the output of everyone in the office.

Safety razors have changed the face of a nation by removing its whiskers. It is for us to change its heart and soul by removing from business the grouch which has its origin in disquiet and turmoil.

Whatever else we may set as our task let us highly resolve that the office shall no longer be a place of dread and that the nerve-frayed son of toil who takes his business home with him, shall give way to the cheerful citizen who carries the spirit of home into his business.

* * *

Dj'ver read an advertisement of The Noiseless and admit to yourself that you could write one just as good, if you were not beset by other pressing responsibilities and had nothing else to do but compose such bits of cleverness as, let us say, the "Symphony in B. Quiet?"

Try it!

And when the task is complete, honestly and cheerfully tender your apology to the copywriter and crown him with a laurel wreath.

Going a step further, let us suggest that his likeness be presented in these columns. If there be more than one, we should at least be permitted to meet the ringleaders of this band of advertising malefactors who are contaminating the erstwhile waste spaces of the press with such genuinely good stuff!

The Influence of Rubber in the WAR AGAINST NOISE

by E. S. Underhill
Publicity Section, The U.S. Rubber Co.

It seems quite fitting that we should give some thought to products and materials which like the Noiseless Typewriter seek to minimize or nullify all forms of unnecessary noise. The United States Rubber Company has very kindly given us this interesting article on "The Influence of Rubber in the War on Noise," and they go further in their consistency by minimizing the noise in their offices through the use of over two hundred Noiseless Typewriters.

I

RUBBER tires have done much toward taking the racket and bang out of highway transportation. One of the most important characteristics of an automobile tire, and one not generally considered, is its noiselessness. Rubber indeed has many other qualities that make it useful. It is used for some purposes because it stretches, for others because it is a non-conductor of electricity, in a great many cases on account of it being waterproof and air-tight and again because it is resilient, but its noiselessness is seldom thought of as being important.

The multiple qualities of rubber are nowhere more apparent than in rubber tires. In pneumatic tires its resiliency and its ability to hold air are the chief features that make it valuable. In solid tires its resiliency and cushioning power are the leading qualifications. But in both pneumatic and solid tires, noiselessness plays a part of genuine importance. Fifth Avenue would be a bedlam if the thousands of cars passing along its paved surface ran on metal tires. Great trucks carrying heavy freight traverse the streets of our cities with no noise whatever from the road contact.

Until ten years ago, rubber meant rubber from the jungles of Brazil. There were some other sources of supply of inferior grade, but practically all the prime rubber came from Brazil. Today Brazil's supremacy is gone. In less than a decade, the Far East has jumped to the front, and is now producing under cultivation on plantations, nine-tenths of the rubber of the world.

Seeds from Brazil were taken to England in 1876 and seedlings sprouted from them were shipped to Ceylon. From the few plants thus cared for in their youth, many of which have grown to be monster trees, has sprung the whole of the Ceylon industry, as well as a great part of that of the Far East. The trees fruited in Singapore first in 1881, and the seed was sent to Borneo and elsewhere. In 1891 samples of Malay rubber were sent to London and pro-

nounced good, and in 1889 some sheets were sold to London.

The planters in Ceylon did not take hold of rubber planting with the same eagerness as did the planters of Malaya. In Ceylon they were making good profits in tea growing, and had no need to make a change. But in Malaya the planters and the financial interests in Europe who had sent them were sick of the struggle to make a living out of coffee, and, though in fear and trembling, began to plant this new thing, rubber, hoping if possible, to save their estates from abandonment.

American interests were attracted to the plantation in 1910 when the British and other Europeans had invested between three and four hundred million dollars in estates. The United States Rubber Company, the largest consumer of crude rubber in the world, was one of the first of the American concerns to investigate the possibilities and enter the field. The Dutch Island of Sumatra was chosen for the Company's activities. This American Corporation has established there the largest single rubber plantation in existence — a tract which contains more than seventy square miles of trees in a high state of cultivation. Close to twenty thousand employees are at work in this great orchard. The high standards of administration and scientific culture which have marked this project have implanted in the minds of the dwellers in that far eastern clime, a thoroughgoing respect for American efficiency.

Your soft-spok

The NOISELESS

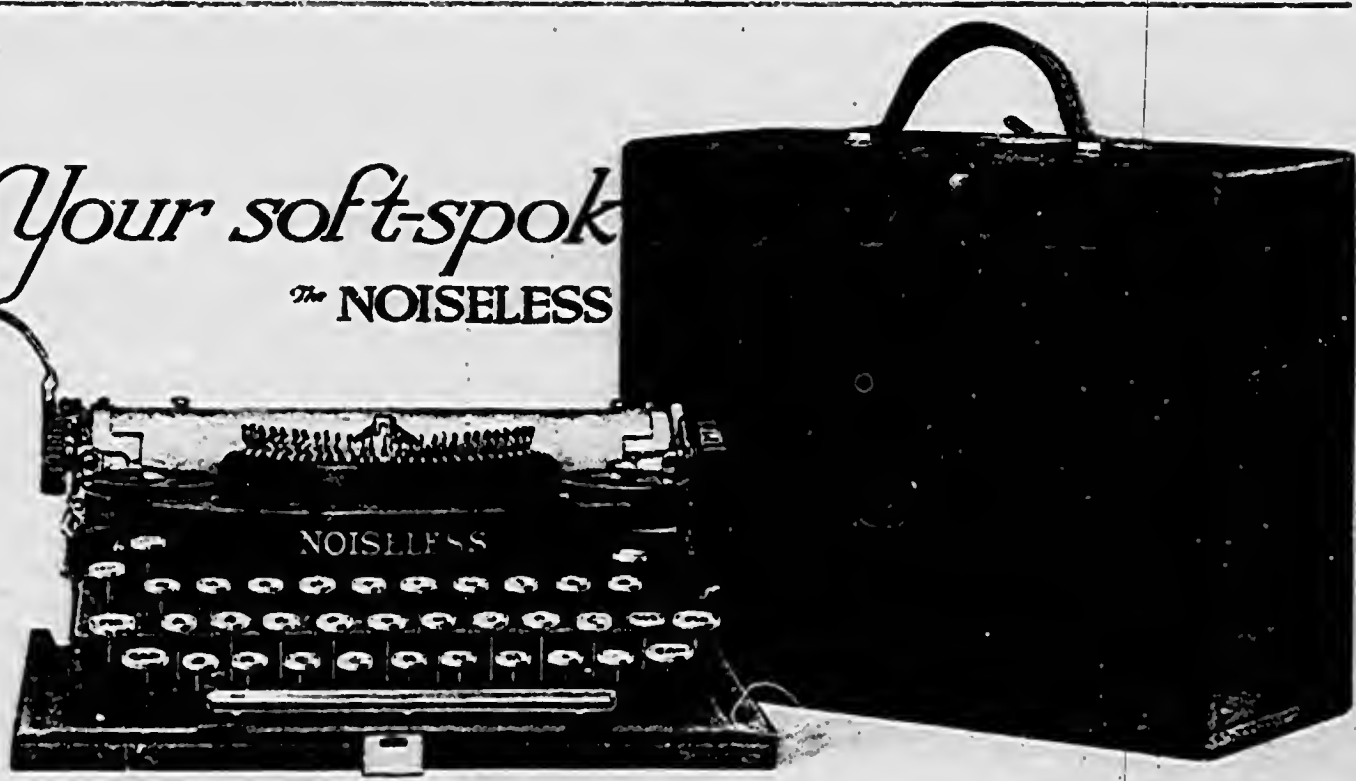

IF you were asked the main reason against using a typewriter in your home, wouldn't you say, "Noise?" You don't want to disturb the restful quiet of the home with the eternal click-clicking that frays and tears the nerves and annoys the family. The Noiseless Portable brings you quiet that will not waken a sleeping baby. No matter how fast you write, there is only a soothing whisper. And more—The Noiseless Portable brings you ease and speed in operation, with beautiful work, as unusual in its quality as the machine itself.

Your nerves are never shocked by hammering of the keys—nor is your thought even interrupted by the forwardness of noise. It writes with just the lightest, most gentle touch—fast enough for the fastest operator, yet equally responsive to the hesitating touch of the beginner.

In the home, work may be done without disturbing the other folks who wish to enjoy the evening quietly.

Reporters and writers, who often carry their machines with them, find this little soft-spoken friend almost indispensable. Clergymen, teachers, students, store and shopkeepers are pleased with the personal privacy of The Noiseless Portable.

The Noiseless Portable weighs only six and one half pounds without the case—eight pounds in the case. The case is 4¾ inches high by 9½ inches by 11½ inches. It is one of the most convenient, compact typewriters ever built and we are proud to place our name on it.

Page twelve

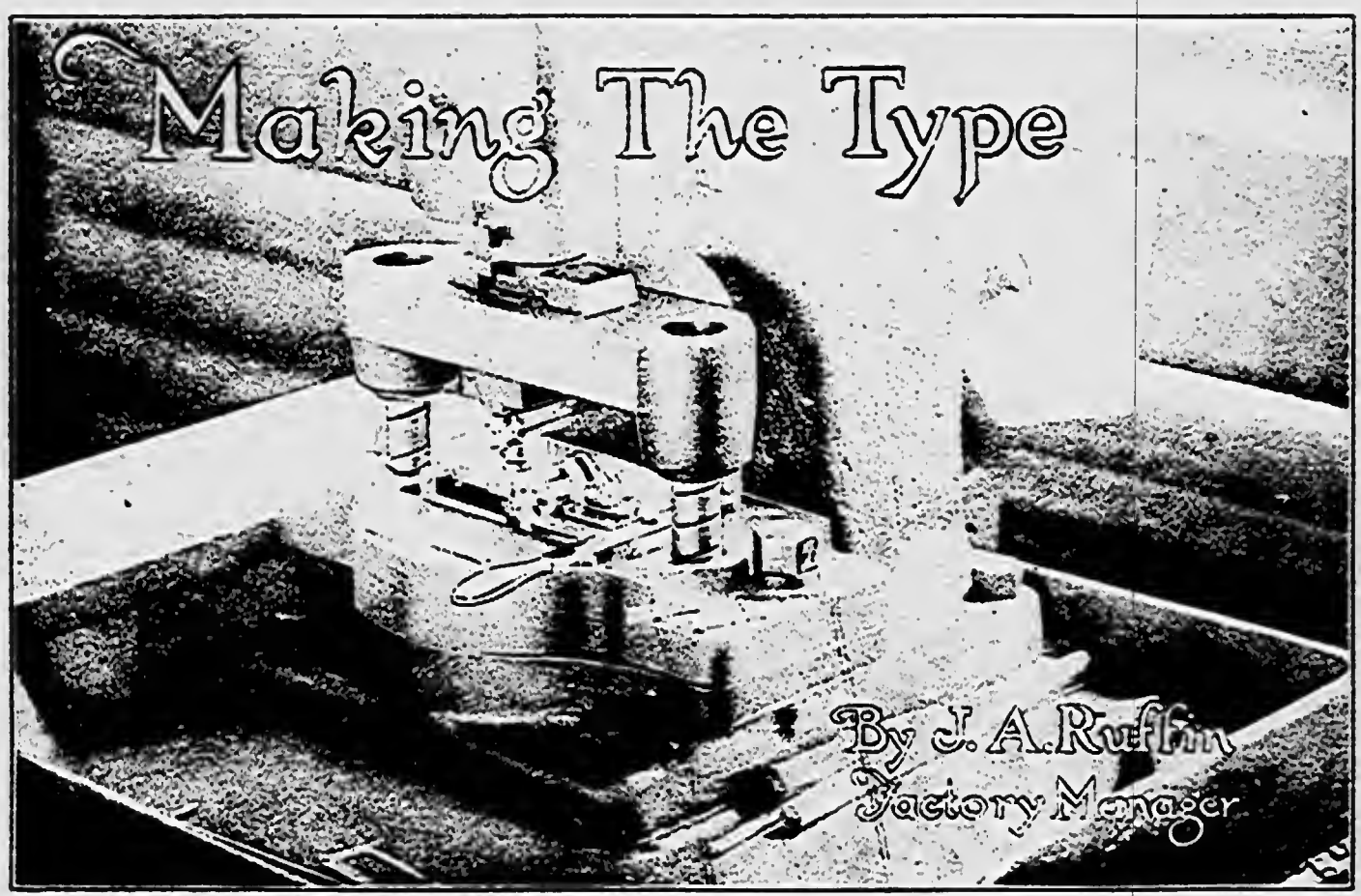

THE type room is usually the most interesting department in a typewriter factory and this is true to a marked degree in The Noiseless plant, as our type is made very much more accurate than is the type of other writing machines. This will be made perfectly obvious to the reader as we proceed.

Those familiar with typewriters know that all the type prints at one common center and that the actions are arranged around a segment radiating about eighty degrees right and left from the center, varying somewhat, of course, in different types of machines. It is clear, therefore, that in order to present the characters squarely to the paper, either the type or the type bars must be angular. In all typewriters, save the Noiseless, the type is rolled parallel with the face of the characters and is all in the same plane, the type bars being bent to suit the angular position of the action. The method employed in the production of the Noiseless is just the opposite, the type bars are all perfectly straight and the type is made to the angle corresponding to the position they assume in the segment.

Since there are forty operations necessary to produce a piece of type, it is not possible to describe them all in the space allotted to this article, so we have selected the eight major operations for this article.

To originate a type it is necessary to have a drawing. This is made on special heavy bristol board and is drawn fifty times larger than the finished size of the type. Besides the character itself, there are two marks thus: — —, these are carefully drawn to fixed scale and are just the same for all characters. These marks are used for locating the type.

The drawing is clamped in a special pantagraph machine and from its outline a templet is engraved (see photo on following page.) This templet is used in a special machine for engraving the matrix or die from which the type is rolled. The tolerance of error permitted in the drawing is twelve thousandths of an inch (.012) plus or minus. As a matter of fact they are usually well within this limit, but let us assume that a drawing contains the maximum error of .012; when it is reduced one-fiftieth of its size in the matrix the type made therefrom will have an error of only two-tenths of one thousandth of an inch. We are therefore justified in stating that our type is perfect insofar as size and contour are concerned. Although there are several operations in connection with preparing the blank for the templet and the block for the die, for the sake of brevity we will call the drawing operation No. 1, the templet No. 2 and the matrix block No. 3.

After the die is hardened it is set up in a special type rolling machine and the characters are rolled or kneaded on a steel slug previously prepared. There are several operations in

connection with the type slug. We will pass them, however, and call the rolling operation No. 4. Before passing to the next it may be interesting to state that the special machines referred to in connection with the rolling of type were designed and built in our own factory.

After the flash which is produced by the flowing away of the metal from the character in the process of rolling is removed, the slug is advanced to one of a group of special milling machines. These machines are provided with adjustable fixtures in which the slug is properly secured. The fixture is then located in a gauge equipped with a fixed microscope with suitable hair lines by the aid of which each character is adjusted to the locating marks described above which insures both lateral and vertical alignment. The fixture is then positioned in the milling machine exactly as it was in the microscope and is passed through a pair of angular cutters milling both sides simultaneously. This we will call operation No. 5.

Our type is milled on seventeen different angles. It would require 28 angles except that in some cases the type on the right hand side of the center are on the same angle as the corresponding type on the left hand side, therefore we can mill or roll either of these types with the same set-up by simply reversing it.

The next operation which we will call the sixth consists of clipping the type from the slug. After this has been accomplished there are several milling and burring operations which for the sake of space we will have to pass and advance to the work of piercing which we will call the seventh operation.

The piercing is done in a bench press provided with a special die adjustable to meet the requirements of the various angles which the type present. After piercing, several minor operations are performed and the type is hardened, after which it is ready to be assembled to the type bars. This operation is performed on a spinning machine and the type is then ready for inspection.

The inspection is done under a microscopic gauge where the most minute error can be instantly located. When the type passes this inspection it is ready to be assembled into the typewriter, requiring no further attention and is always interchangeable with other type even though made several years before. This is something that no other typewriter manufacturer has been able to accomplish, hence our statement at the beginning of this article that our type is more accurately made than that of other writing machines.

The foreman of the Type Department is Mr. G. A. Hanson, and the Assistant Foreman, Mr. Tracy L. Neff. Mr. Robert D. Burdick has charge of assembling the type bars and inspection.

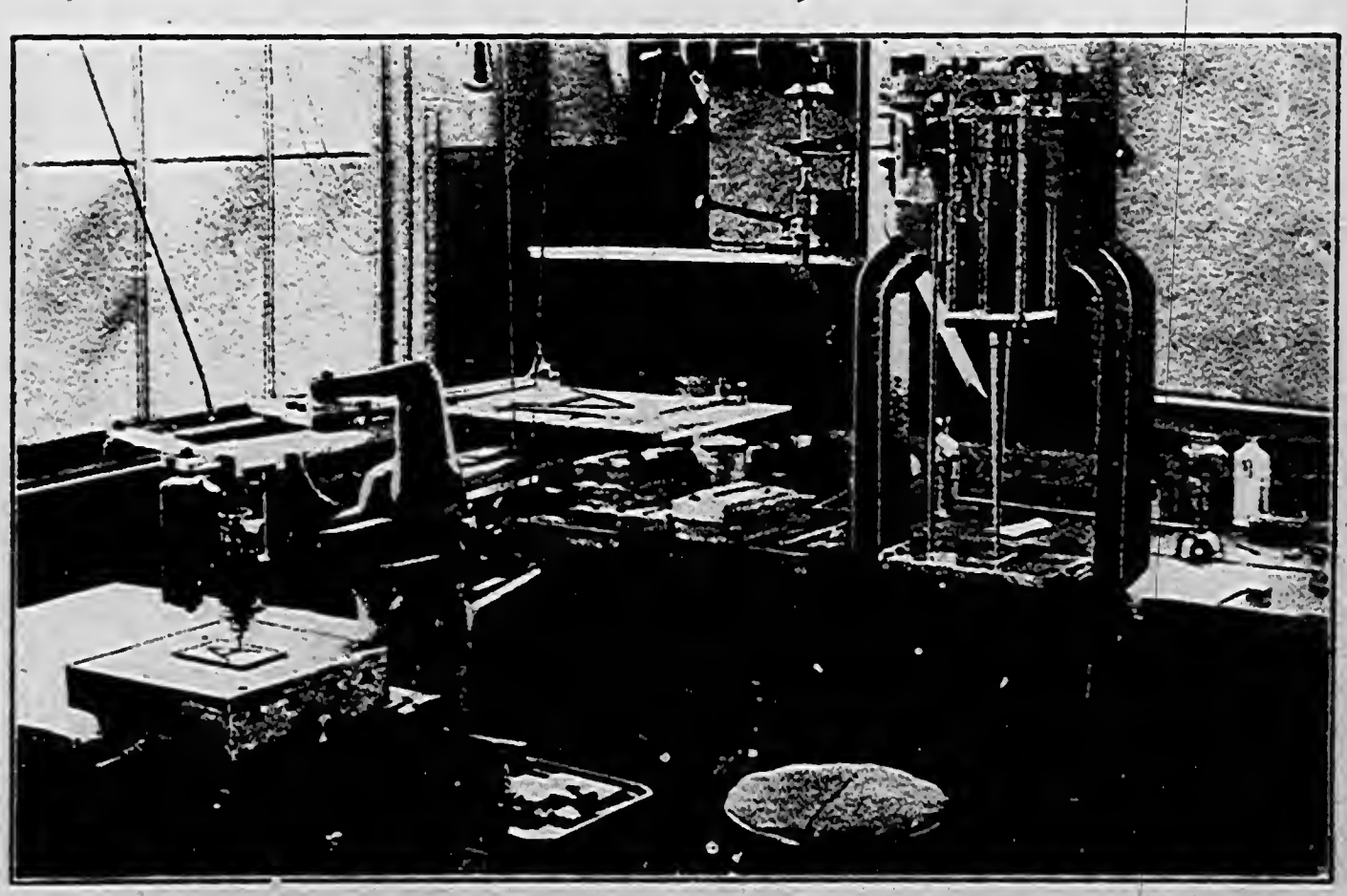

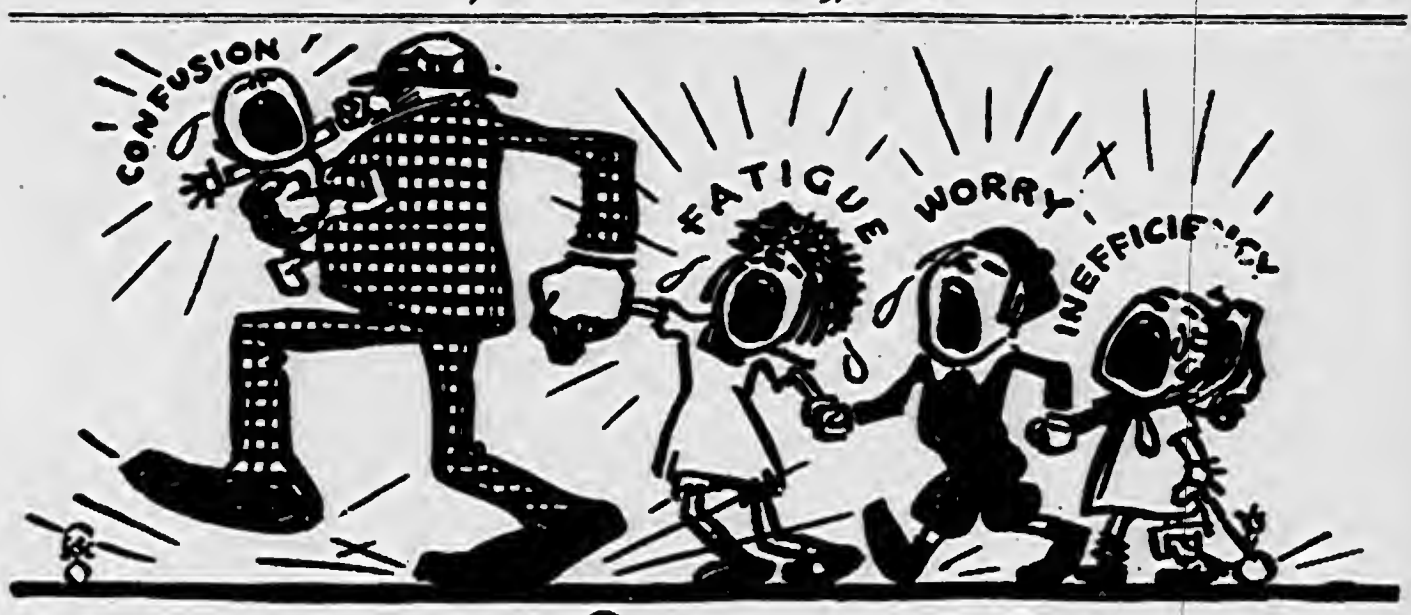

Noise is the father of fatigue —

by **C. L. Jordan**

BUSINESS has employed science in the effort to discover why people make little mistakes, glaring and costly. It is queer, too. Have you ever thought why an expert bookkeeper should suddenly turn in an account where he has multiplied nine by six and made it sixty-three? Perhaps he is a man who has figured millions correctly. And then one little mistake creeps in.

Consider an expert typist. Day after day she types beautifully. And then, little errors creep in that at another time she would detect instantly.

Most executives attribute these mistakes to carelessness—inefficiency or to sickness. But these errors are more and more costly every day. It is not enough to agree that "to err is human." It is better to *correct* than to be forced to forgive.

So science has sat in judgment on error, and the findings have convicted noise and fatigue. Of course, it is necessary to take into consideration the fact that there is an element of carelessness in any business office. But with conscientious, thoughtful employees, there is a definite force at work inducing error.

The experiments of the eminent scientist, Angelo Mosso deliberately confound the business man who claims that he and his employees "get used to the noise of the typewriters." Mosso proved by experiments that the slightest noise, even the tone of an organ, had an effect on the nerves which retards action. William James proved the same truth with the noise of a bell. From these and many other experiments, it has been established as a fact that noise distracts attention and fatigues the nerves. Working near a noise requires a greater effort to concentrate and thus hastens the onset of fatigue of the attention. Right here, error comes in and mangles the records of the day.

It may be in a machine shop, where incessant noise causes a mechanic to divert his attention long enough to be caught in some fatal accident. It may be in an office, where irritating typewriter noise slows up accomplishment, and causes errors to slip into the work of conscientious and efficient employees. In many machine shops, the mechanics are protected by stuffing cotton into their ears. This is neither necessary nor desirable in a business office.

But even more costly than error is the effect of noise-nerve-fatigue on personal ability and health. You have often heard people say that noise gave them a headache. That is a definite thing. But the deadliest work of noise is unseen at first—it is the numbing of the nerves, which makes you think you are used to the noise. But you are not. Your nerves are simply numbed. They are drawn tight. They do not relax—even in sleep. This condition even robs you of restful sleep. Its first actual evidences are loss of ability and efficiency. The mind does not operate as clearly nor as quickly. Errors become more common.

Psychology enters into this condition to a degree, but the noise-nerve-fatigue is also responsible. It is partly responsible for irritation and for the ultimate nervous breakdowns that are increasing with alarming frequence every day. Executives are realizing the necessity of doing everything possible to promote the comfort of their employees. They seek to eliminate error and fatigue in many praiseworthy ways.

But the average business office is still alive with the distracting noise of typewriters.

* * *

Some day, The Noiseless is coming into these offices, bringing peace and increased production. And the only dissenting voices will be those of the discarded noisy typewriters.

AIN'T IT FUNNY?

By Russel Henderson

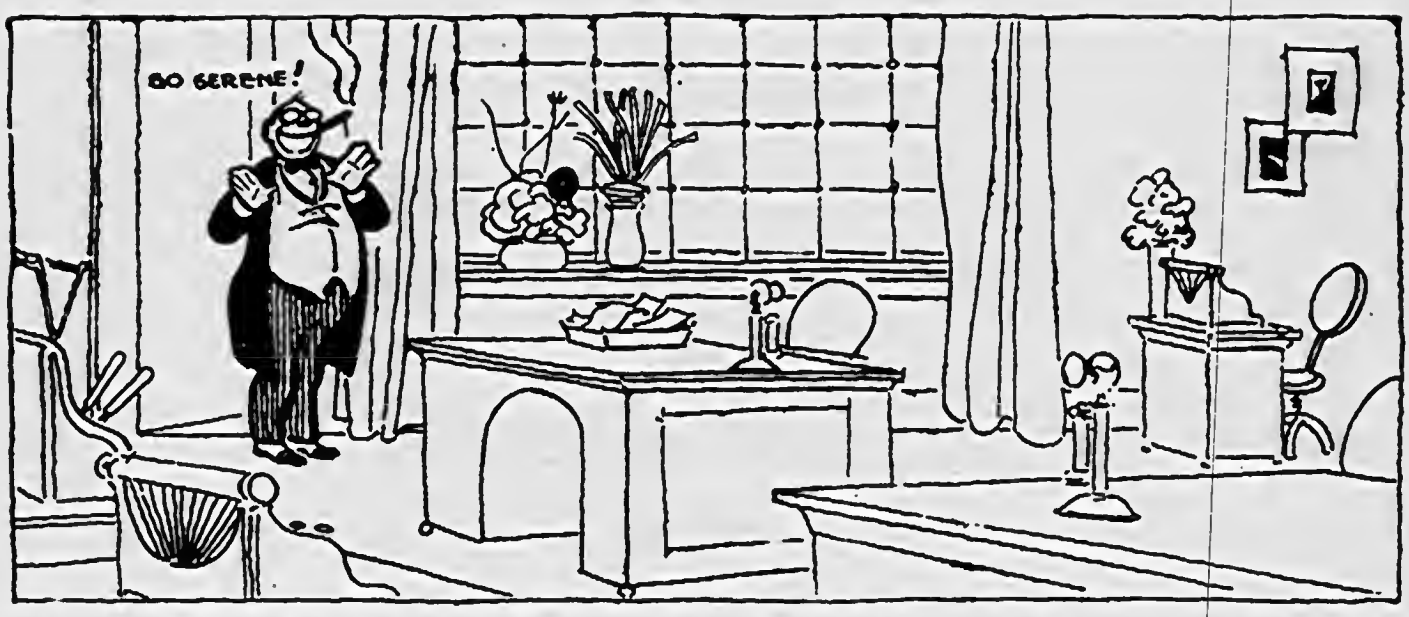

The average business man installs labor-saving devices of the most modern manufacture; he spends thousands of dollars to make his office sound-proof; he does many other things for the comfort of his employees; he cuts the detail to give thought free rein and accomplishment a clear path—BUT

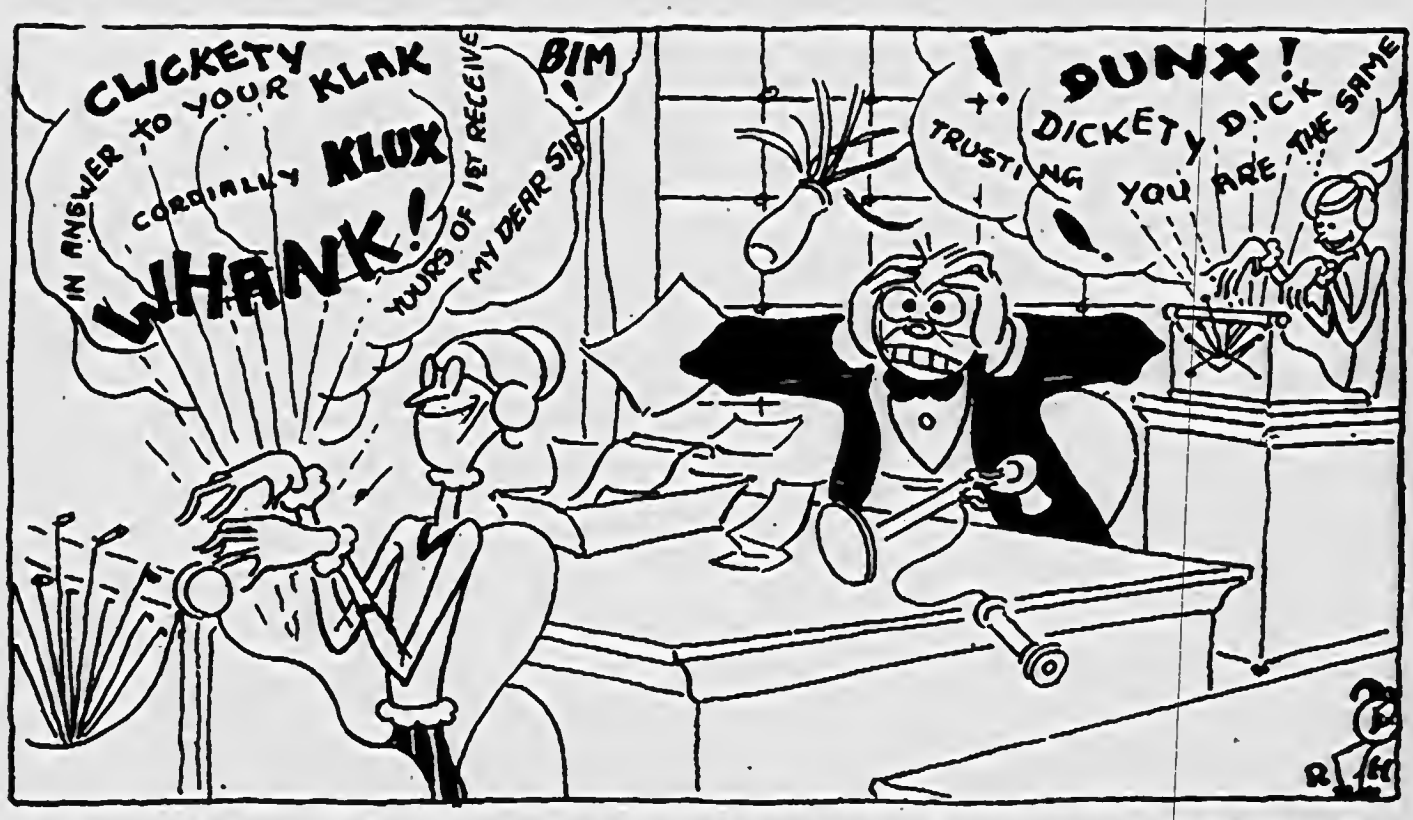

He still installs the old-fashioned noisy typewriter which wears and fatigues the nerves with its endless click-clicking; which makes men shout to be heard; which continually interrupts thought and disrupts work; which slows down the speed of clear thinking—and which, in fact, is almost as much out-of-date as the old blind typewriter. Why buy NOISE when you can get more and better work with QUIET?

At this Season

"Peace on Earth, Good Will to Men"

is a particularly appropriate Greeting

from

The Noiseless Typewriter Co.

to You

640

WHISPERS

Def. Ex L

A LETTER
from
NEWCOMB CARLTON
President of
THE WESTERN UNION TELEGRAPH CO

SILENCE, THE GOLDEN
by
ROLLIN KIRBY

APRIL
NINETEEN HUNDRED TWENTY TWO

WHISPERS

from The NOISELESS *Typewriter*

Vol. 1 APRIL, 1922 No. 4

The Noiseless Portable

THE feature of the present number is The Noiseless Portable.

Work on this model was begun exactly four years ago, namely in March, 1918. At this date we had a fundamental idea, but nothing else. The fundamental idea was represented in metal simply by one type action put together for the purpose of illustration, and so mounted as to make clear the operation of the proposed structure.

The arresting feature of this new type-bar was that it did not slide along a plate after the manner of the typebar used in our large machine. It was pivoted, and functioned through a swinging action. At the same time it was grounded upon the momentum accumulator principle, which not only makes the large Noiseless Typewriter quiet, but gives it high speed and great lightness of touch.

With this for a point of departure, our Factory has kept working on the Portable for four years with unflagging effort. This is not the place in which to outline the stages through which a typewriter must go in emerging from a mechanical conception and becoming a commercial product manufactured in commercial quantities. Those who have had experience in this field of industry will be the first to recognize that four years is a period of moderate length for such a development.

The Noiseless Portable is now ready for the market and The Noiseless Typewriter Company is ready to book orders. In selling a Portable Typewriter it is not only necessary that the machine should do excellent work at the moment when it has passed inspection at the Factory. Provision must be made for a kind of packing which will take it through the mail or by express to the ends of the earth. When delivered at Dawson City or Timbuctoo, it must be able to write a good looking letter the moment it is taken from the box—thus cutting out all need for local inspection prior to delivery to the user.

Bearing all these things in mind, it may still be reiterated that The Noiseless Portable is now ready for the market, and there can be no doubt that the market is ready for it.

The advent of The Noiseless Portable suggests a message to our own circle of friends and to the public. It also suggests a message to the members of our own organization. To our friends and to the public we should like to point out that The Noiseless Portable means a broadening of our business. It is recognized by everyone that the typewriter field has been enormously and permanently enlarged by the Portable model, as opposed to the heavy office machine. In the course of time every one of the leading typewriter companies is certain to market a Portable of some kind. The action of The Noiseless Typewriter Company in entering this field will be rightly interpreted by those who see in it a determination to advance with the times.

To those of our own organization we may point out that by the exercise of rare mechanical skill and by unremitting labor, the Factory has produced a Portable machine of which we may all be very proud and in which we can feel genuine confidence. It appeals quickly to the imagination and nothing is so easy to predict as that it will sell readily on demonstration—across the counter, so to speak.

The lists published in the last number of "Whispers" constitute one landmark. The coming of The Portable is another very impressive landmark in the expansion of our enterprise.

Brandon W. Colby

President
The Noiseless Typewriter Co.

Friends of *The* NOISELESS

- WESTERN UNION -

THE WESTERN UNION TELEGRAPH COMPANY
195 BROADWAY

NEWCOMB CARLTON
PRESIDENT

NEW YORK

March 3rd, 1922.

Dear Dr. Colby:

I have your letter of February 23rd, suggesting that I make a brief statement in your House Organ, WHISPERS, regarding the Noiseless Typewriter.

In reply I would say that I have followed with interest the gradual development of your machine from its first crude beginnings to the point which it has now reached. For the past four years it has been used exclusively by my own Secretaries, and throughout the Western Union system many hundreds of Noiseless typewriters are in daily operation - many of them being in service twenty-four hours each day.

These statements indicate with sufficient clearness that after thorough test, we are employing The Noiseless widely. I may add that your Company seems to me to be engaged in a work of real usefulness: I have long felt that in offices quiet has a moral value which is very real, though hitherto not sufficiently recognized.

Yours faithfully,

Newcomb Carlton

President.

Dr. Charles W. Colby,
President of the Noiseless
Typewriter Co.,
253 Broadway,
New York City.

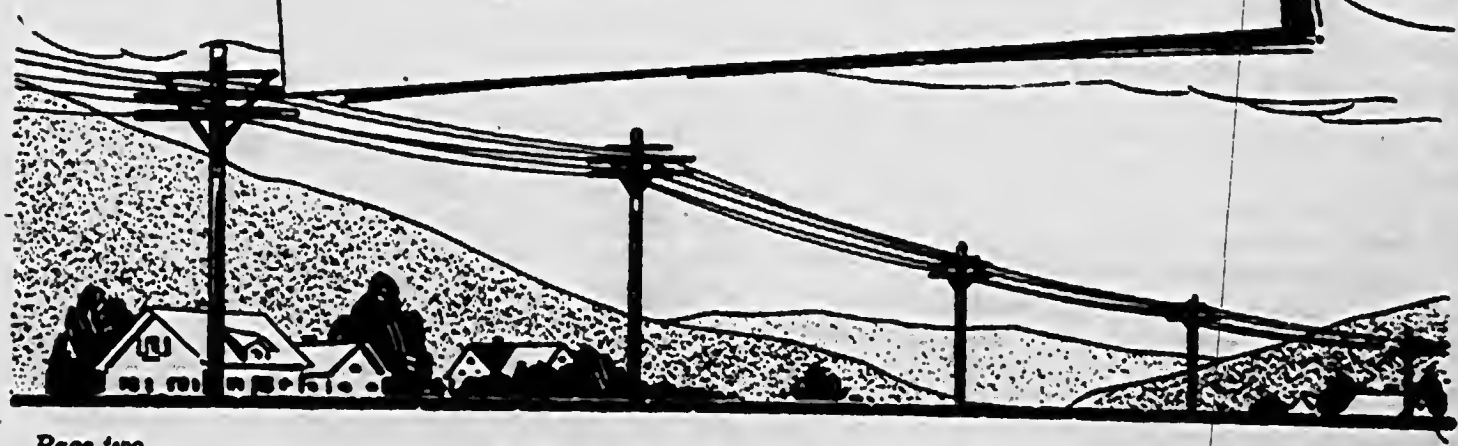

The Pathos of Ignorance

History records that the great ideas which have revolutionized human society have been, for the most part, long aborning. The story of the efforts of Columbus to sell his idea of a new world is known to every school boy. Poor Galileo, having accepted the rotation of the earth to his own complete satisfaction, was obliged to recant his belief under pain of death, as his world evidently was not ready to accept his great discoveries. Cyrus Field three successive times attempted to lay the Atlantic Cable, and was the subject of no small abuse and ridicule because of his epoch-making efforts. The introduction of the adding machine, a new necessary adjunct to every business office, had its long period of struggle, and in our own industry the great advantage of the visible writing machine is not accepted in some offices even today.

HABIT binds us down into self-inflicted slavery, which costs us untold time and untold wealth. Our reaction to new things, calloused as we are by the bonds of habit, is usually hostile. The Noiseless Typewriter offers to the business man, his operators and all about them relief from distracting and harassing noise. Hundreds of offices appreciate its blessings, and in those offices an operator's work does not have to be suspended while the telephone is being used. The quiet whisper of the Noiseless keys interrupts no conference. The Noiseless Typewriter is indeed the silent partner of many modern business offices.

To the operator especially, after the first few days of readjustment, the Noiseless Typewriter brings lessened fatigue, increased output of work more agreeably accomplished, and nerves less worn by the day's effort. If your office has not yet installed the Noiseless Typewriter, stop for a minute in your work and listen to the clatter of the noisy machines within ear shot! Is it not worth the effort of a few days on the part of the operator to be free from the disturbing uproar, which noisy type bars bring? Freedom from such noise means better work, closer concentration and eventually an increased wage, because of the increased efficiency and increased earnings of the office.

Thousands of operators on the Noiseless Typewriter, most of whom probably opposed its installation, because of the slavery of habit, are today loyal and strong friends of their machine. They have passed through the few days of making its acquaintance, and appreciating the great advantages of its friendship, in return bestow upon it their staunch and loyal approval. The pathos of ignorance is here manifest. Those operators and those executives, who have accepted as a part of the necessary equipment of their offices the devices which make for fresh air, sanitation and comfort, still permit their tympanums to be under the constant attack of noisy type bars. The office with the noisy typewriter is working under a handicap which has no small element of pathos, because of the ignorance of those in authority, who have not or will not accept this latest development for their increased efficiency and their comfort.

The Noiseless Typewriter is the most DURABLE machine on the market. It has been selected from all other makes for the twenty-four-hour service, which the telephone rooms of one of our big Telegraph Companies requires, where for twenty-four hours a day it has to give quiet and efficient service.

The Noiseless Typewriter is the FASTEST machine on the market today. A well-known New York Banking House recently under its own auspices conducted a speed test, in which the Noiseless in competition with other typewriters won the first five places.

The Noiseless Typewriter in the hands of an experienced operator and with the proper materials can make MORE AND BETTER CARBON COPIES than any other machine on the market. A week's trial will convince you of the truth of these facts. Is it really wise to continue the use of the noisy machine when the Noiseless will bring you these advantages?

Give it a fair trial and the pathos of your former ignorance will be apparent.

WHISPERS
PUBLISHED
By
The Noiseless Typewriter Co.
at 253 Broadway, New York
H. J. Lance . . . . . *Editor*

* * *

Energy Spent in "Not Hearing"

(*From the London Times*)

"Some recent studies have shown that there are few more active robbers of our energy and strength than noise. It was supposed that people got accustomed to noises which were heard frequently, and that thereafter they did not notice them.

"The idea will have to be modified. What we call 'getting accustomed' appears on closer study to be a state of active resistance. We are refusing to hear and expending energy in the process.

"There are now in existence instruments which give approximate values for the energy spent in 'not hearing' noises. The total amount spent by Londoners must be enormous when the noises of streets and offices are taken into account. That it is far greater than is generally supposed is made clear as soon as illness comes. Then the stock of energy available for all purposes is reduced and 'not hearing' cannot be practiced. The noise of the world we live in becomes unbearable.

"There is now a demand by many employers of labor, who recognize how much waste noise is responsible for, for noise reduction in factory life. The same need exists in office life and indeed in home life. At the present moment we live more noisily than any of our ancestors—and unless we look to it shall pay the penalty of our carelessness.

"Pure air, sunlight and silence are a trinity of great healers. But it now seems that silence is greater than either of the other two."

This article was written by the Medical Correspondent of the *London Times*, and was published on March 3, 1922. (See also page 15 of this issue.)

Malign Influence of Noise on Workers

"NOISE is a serious evil in industrial communities" says the Lancet (London) commenting on the anti-noise campaign recently launched by Professor H. J. Spooner in England. Continuous exposure to loud noises may lead to a sense of weariness that impairs working capacity more quickly than does severe muscular fatigue. It thus tends to lower output so to raise the costs of production. From the economical point of view noise may therefore be regarded as exercising the same malign influence upon production as inefficient management, poor light, bad ventilation or excessively long hours.

* * *

"The fact that while noise may be tolerated, if not ignored by healthy people at their best, the majority are not in a condition of bodily and nervous health to resist the irritation and consequent weariness induced by a long continuance of noises. It is not only the naturally hypersensitive Carlyles who suffer, for few long-distance travellers by rail are altogether exempt from fatigue.

* * *

"Over and above the effect of noise upon the general nervous system, there is the deleterious influence exerted directly upon the hearing organ of workers in noisy occupations.

* * *

"But—and it is well to state it frankly—din, even in an industrial milieu, is not inevitable. If, as Professor Spooner suggests, quietness in a factory can be shown to have an economic value, then we may reasonably anticipate that it will be forthcoming. Even now 'quiet running' is beginning to figure more and more in advertisements of engines other than those of the internal combustion type."

* * *

Mr. C. L. Jordan, a writer of exceptional insight into the evils of noise on the human nervous system has written an article for *Whispers*, which will be found on page 11 of this issue. Mr. Jordan's subject is "The Enemy of Production," and his treatment of it well deserves a careful perusal.

from The NOISELESS Typewriter

SILENCE the GOLDEN

by ROLLIN KIRBY

A POET of another generation wrote a sonnet to demonstrate that real silence consists of a condition where noise once was, that there is no Simon-pure silence in the depths of the sea but amidst ruined cities where life had once roared.

He may be right at that—I've never been in either place, so I'm willing to take his word for it. The theory is sound at least. Sometimes poets have a way of landing on a truth that has escaped hydraulic engineers, corrugated roofing manufacturers or life insurance actuaries.

I suspect that when Tubal-Cain gave his anvil the final wallop and took his apron off and the cotton out of his ears, and went home to Mrs. Cain and said, "I'll be dingbusted if I can stand it any longer, I'm going in some other business," he voiced the world-old revolt against noise.

The amount of needless punishment the human tympanum has absorbed is appalling. It is my personal opinion that while the ear is hard to defend from a standpoint of beauty, it has *some* rights. Suppose the nose, for example, were constantly assailed by odors such as asafoetida, boiled cabbage, Cheapjohn perfume or a tan-pit in the full strength of its vigor, how long think you would a maddened world tolerate it? And yet the poor dumb tympanum, with scarcely a friend on earth, takes it lying down. Suppose the eye were made to gaze without surcease upon cubistic and post-impressionistic pictures, would it revolt? Yes, Clarice, it would.

I remember some years ago when the hounds of debt were on my financial traces, going, in my extremity, to the office of a man I knew to broach a certain delicate subject. The outer office was filled with maidens who assaulted typewriters with such percussion that the air was rent with their endeavors.

A young person at her desk asked me the object of my request to see the head of the firm.

"About what?" she shouted. "Private," I bellowed back.

"Sorry," she yelled, "But you'll have to tell me—IT'S A RULE!"

"I WANT TO BORROW FIFTY DOLLARS!" I screamed, suddenly conscious that the din had subsided, and that the office was becoming interested. It was an unhappy incident.

And time speeds on, as they say on the movie screen, and again I present myself at the same office, bearing the marks of the same old hounds. What a change my countrymen! Same room, same number of young women, busily engaged at their machines, but over all a gentle and healing silence. I whisper my request for the young person—the stenographers doubtless

conceive me to be a Napoleon of business come to let the firm in on a good thing.

From the impecunious point of view I know of no invention of our times that can compare with The Noiseless Typewriter.

A mechanistic age is necessarily an age of din; so when some genius comes along and invents a device that subtracts (as Luther Burbank does the spines from the cactus or the seeds from some fruit) the noise from a contraption which hitherto has been, pound for pound, about as vociferous as they come, I'll tell the waiting world that that man has done his bit toward bringing the millennium a little nearer.

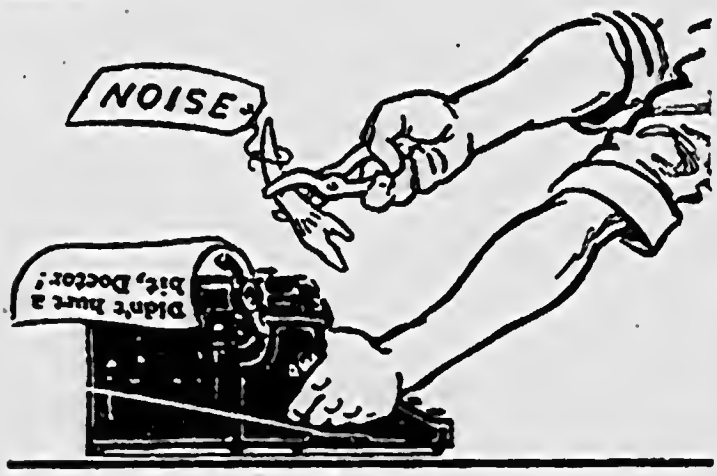

Any man, I say, who can put a thing like a typewriter, full of a thousand complicated bezoogii, on an operating table and deftly remove its vocal cords is certainly one of the Mayo Brothers of Mechanics.

The gentleman who writes for Bartlett's Quotations under the name of Ibid had the right idea when he composed the following lines:

"And silence like a poultice comes
To heal the blows of sound."

You have to hand it to Ibid when it comes to putting things neatly. Had he lived today (he died in 1737) he would doubtless have written:

"And Silence, whose other name
Is the Noiseless Typewriter, like
a poultice, comes
to heal the blows of sound."

Of course he would have worked it around some way so that the meter would have been all right—you could trust old George Ibid for that.

"The Noiseless Typewriter rests its claim upon the fact that concentration of thought is essential to success in business."

How Far Does Sound Travel?

This question has puzzled experts ever since ears were invented When the recent explosion occurred in Oppau, Germany, the British Air Ministry tried to find out if anybody in Great Britain had heard any sound of the disaster. Letters were received from 48 persons who thought they had really heard the explosion, but in checking up only four of them agreed on the time. We do not know how many miles sound travels, but we have, much to our annoyance, heard noisy typewriters over the telephone while speaking to an office over two hundred miles away.

* * *

Typist Sentenced

A Bombay typist was given a sentence last week very different from the regular run of sentences such as "Replying to yours of the 15th, etc." This was a sentence for two months' imprisonment for threatening the life of a Prince. The Magistrate, The Exchange Telegraph states, attributed the threats to a much disordered intellect led astray by agitation. This particular typist was the user of a noisy machine. Undoubtedly the agitation which led him astray was caused by the hammering of the keys.

* * *

Gray, the poet, famous for his "Elegy Written in a Country Churchyard," was born in Cornhill, London. He was a great lover of quiet as indicated in *The Elegy*. Should Gray's shadow appear in the building which now occupies the site of his father's house, he will find much to his gratification, Noiseless Typewriters in operation, and he will return to the Elysian Fields knowing that he was not alone in his quest for quiet.

* * *

From Stephen Leacock

"The Noiseless Typewriter is a wonderful machine and I am sure it will be a huge success all the world over—I was just going to say that it would make a noise in the world, but that happens to be just what it doesn't do."

STEPHEN LEACOCK.

Portable Typewriters

THE development of writing from its earliest form could be made the subject of a very entertaining film. First of all the cave-man of Paleolithic times, would be depicted in his dimly-lighted and primitive home, seeking by crude pigments or by a flint chisel to leave some record of himself and of the vast, contemporary animals which he was seeking daily to slay or to evade. Then would come the hieroglyphics of Egypt and the cuneiform inscriptions of Assyria. These would be followed by Cadmus and the beginning of the alphabet, the writing down of the Homeric Poems, the use of papyrus, the use of the stylus, the use of parchment, the scriptorium of the mediaeval monastery, the evolution of the steel pen from the quill, the workshop of Gutenberg, and the successive stages by which the printing press has become the chief instrument in modern life.

At the close of this record would be set forth the main stages through which the Typewriter has passed in advancing from the early models of Pratt and Sholes to its present high efficiency. And last of all the film would show the Portable Typewriter as the most significant contribution to the art of writing which has been made during the past decade.

It is a matter of common knowledge that the *Corona* is the pioneer in this field, and generous praise should be given to those who were so capable and so far seeing as to work out the mechanical problems connected with its development. The large market which it has found proves that the public was prompt to welcome the appearance of a typewriter that is light enough to be carried without fatigue.

As a result of the success won by the *Corona*, several other portable typewriters have been brought to the market, notably the *Fox*, the *Hammond*, the *Underwood* and the *Remington*.

The latest of all the Portables is our own—The Noiseless—and its appearance may fitly be made the subject of a brief statement regarding the nature of its usefulness.

The outstanding point is that The Noiseless Portable can be used at any time and in any place without making itself a nuisance. Indeed all the arguments in favor of The Noiseless Typewriter are emphasized by the conditions under which The Portable machine is used. The place of the large typewriter is in the business office where a great volume of correspondence must be turned out every day. Here the strain to which the machine is subjected calls for heavier materials than are required in the Portable and here, also, it is possible to control conditions with a view to reduction of noise through the arrangement of the office. But where the Portable is used—namely, in the home and in travelling—it is not possible to control conditions in the same way.

Take the home, and imagine the difference between a machine which cannot be heard through a partition and one whose noise no partition can muffle. Consider the use of the Typewriter in trains, hotels and steamboats where it is impossible to use the hammer-blow machine without being a source of inevitable annoyance to all within earshot. Consideration for your neighbor demands the use of The Noiseless Portable.

There are three important reasons why the Typewriter should be used rather than the pen. *First*, the Typewriter—even in the hands of one who is not very proficient—will turn out twice as much work as the pen. *Secondly*, a typewritten page is perfectly legible. *Thirdly*, the typewriter enables one to keep a copy of what he has written. For these three reasons the typewriter will tend to supplant the pen as time goes on and more people become typists. Now the time to learn typewriting is between the ages of six and sixteen, and the place in which to learn is the home. Hitherto the Typewriter has not become established in homes, partly because of the horrid din made by the predecessors of The Noiseless and partly because of the cost of the machine.

There is no possible doubt that the typewriter can be made a great agency in education, and in this work The Noiseless Portable will have the foremost place, because it is sold at a moderate price and because it can be used in the home without disturbance and irritation. Indeed, it is not ridiculous to look forward to a near future in which The Noiseless Portable will be considered an even more indispensable part of household furniture than the sewing machine—more indispensable because it is necessary for everyone to write and it is not necessary for everyone to sew.

In brief The Noiseless Portable enables the child to learn typewriting at home in his earliest years, easily, without fatigue and with very considerable amusement to himself.

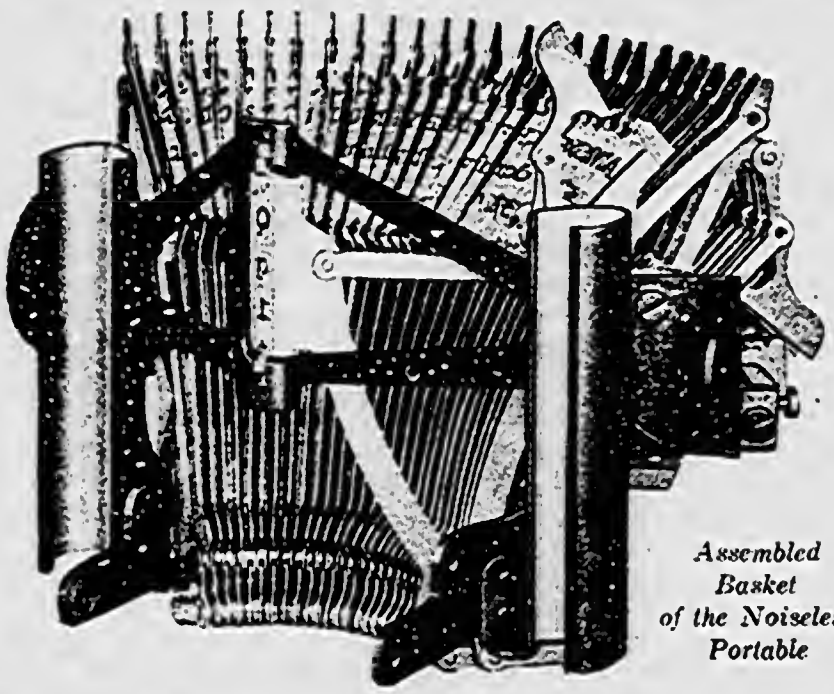

Assembled Basket of the Noiseless Portable

The HEART of The PORTABLE

By J. A. Ruffin

I VENTURE the statement that a very small percentage of typists, or possibly even those engaged in the manufacture and selling of typewriters, realize that the printing element generally known as the type action is the real distinguishing feature between the various kinds of writing machines in general use.

The type actions employed in the Noiseless typewriter are such radical departures from any of those used heretofore that I believe a brief description of our portable printing element will be of interest to the readers of *Whispers*. Before proceeding, however, may I not rapidly sketch the salient features of a few of the older actions? This will refresh the memory of those familiar with them, and enable us all to visualize more clearly the points of difference.

In most typewriters the key actions are quite similar, and the carriages much alike consisting of a platen, feed rolls, line space mechanisms. twirlers, etc., etc. (the metal platen of the Noiseless typewriters being a notable exception.) The escapements vary only in detail, the machines are equipped with back spacer, margin release, tabulator, etc., which are near enough alike to be first cousins but there is a marked and distinctive departure in the design of the type actions of various machines.

Some of us remember those most ingenious actions of the Williams and Yost machines which performed wonderful gyrations in their journey from normal to the printing point and for this reason were facetiously called the "grass-hopper movement." Again we have the type action employed in the flat platen machines such as the Elliott-Fischer. In this type of instrument it is impracticable to shift either the platen or the basket. Therefore the type is secured to a type head which is journaled into the type bar with means of oscillating it from lower case to capital or figure.

Then we have the Oliver style of action swinging from right to left and printing on top of the platen. There are also wheel and shuttle machines, the type wheel and shuttle performing the same function as the type action in the type bar machine, and finally the familiar hammer blow actions of the well-known machines of today which bring us to the Noiseless typewriter, the last word in writing machines. In this article we are not going to discuss our large machine, but will confine our remarks to "The Heart of the Portable."

While it is true that all moving parts operate much more quietly in our machine than others, the dominant *noiseless* feature resides in the type action. The accompanying figures show the assembled basket of the portable and inasmuch as this consists of the type actions, segment, vertical ball rails (upon which the basket is shifted to capital or figure position) universal bar, etc., etc., it is a self-contained unit, hence its title, the "Heart of the Portable."

The rear view shows the "Q" action at the moment of printing, while the others lie around the basket in their normal position. This is more clearly indicated by the photograph of the individual action, the shaded portion showing the action at the moment of printing and the light lines the normal position. Please note that from normal position to the printing point is 1½ inches and since the type has to travel from 4 to 6 inches in other machines to reach the printing point, it is obvious that the Noiseless is the fastest typewriter manufactured.

The operation of the Noiseless action is as follows: The key lever should be struck with a quick staccato finger blow to obtain the best results. It will respond to a very light touch and is preferably operated in this manner but regardless of the quality of the touch employed the result is the same. The key lever is depressed to a final stop, advancing the type to approximately ⅛ of an inch of the platen, from which position the actual printing is accomplished through the momentum accumulator by breaking the double toggle, thus *pressing* the type to the paper. Since the only function of the key lever is to energize the momentum accumulator, the final stop referred to may be made of leather or rubber, thereby preventing noise when the key levers come in contact with it. As a matter of fact the key levers rarely reach the final stop when the instrument is properly operated. This is possible because the type action is not positively attached to the key lever but is connected by a pull link suitably slotted, permitting the action to continue its movement after the key has ceased to travel.

It is clear, therefore, that the key lever is not confined to close limits so that yielding or silent abutments can be used to advantage. In fact the only reason stops are used at all is to prevent straining the parts when the keys are struck with violence.

Each type action in the Noiseless machine has an individual adjustment to regulate the amount of pressure applied at the printing point, and is obtained by turning the adjusting screws in or out to suit the condition. One may easily observe these screws in the rear view of the illustration, "The Heart of the Portable." When this adjustment is properly made, the printing will be uniform regardless of the force with which the machine is operated.

Before closing I want to point out that the Noiseless type action contains more parts than those in other machines. These added parts, however, are only incidental to guiding the type bar to the printing point without noise, and they may be likened to the reins in guiding a horse. The speed with which one may reach a given point and the load a horse can draw are inherent in the animal itself and not in the reins. So with the Noiseless typewriter, the real printing function resides in the type and type bar only, as it does in other machines, and the means of presenting the type to the paper marks the outstanding difference between the Noiseless and noisy typewriters.

Space prevents going further into detail in this issue of *Whispers*. Nevertheless I believe that, with the aid of illustrations, what I have been able to say will give our readers a fair conception of "The Heart of the Portable."

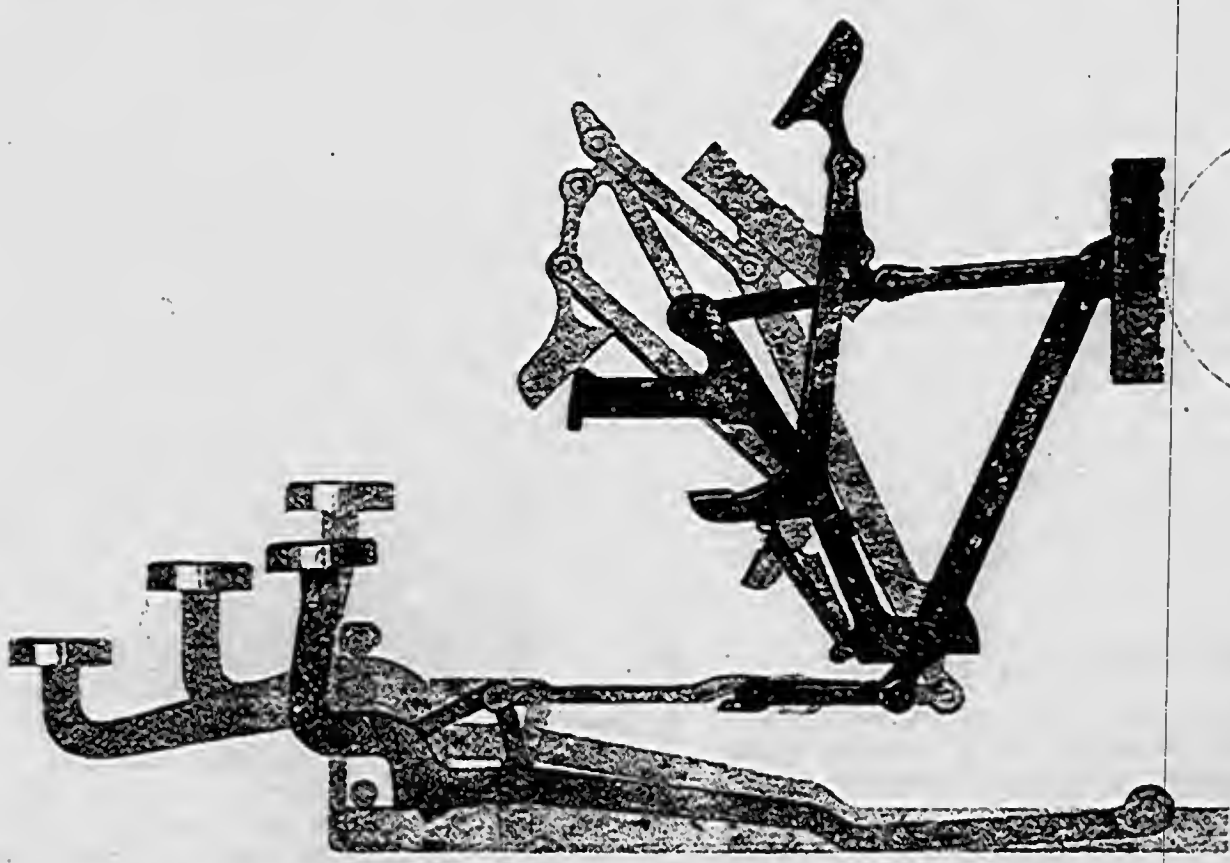

Drawing showing single type action of The Noiseless Portable. The heavy shading shows the action at the printing point. The light shading shows action resting in basket.

Paris Declares War Again

War has been declared in Paris again. But this time against noise. Science has been asked to take up the problem of protecting the nerves and brains of city dwellers against the harsh and unnecessary noises. At a recent meeting of the Academy of Science, a paper was contributed by the celebrated French scientist, Dr. Marage, pointing out that if city noises were inevitable, at least it was possible to control them and thereby avoid a serious loss of efficiency.

Dr. Marage suggests that street car bells should be tuned to a perfect major scale and that automobile horns always be in bass and the vibrations deadened by the use of lead or aluminum. Noises from neighboring apartments, which he considers as nerve destroying, could be made unnoticeable by using a small, low-toned electric motor of varied resonance placed in a box, the motor to be started up whenever the neighboring noises become annoying. Vibrations thus produced, he asserted, do not injure the ear, but prevent it being irritated by other outside noises.

He suggested that it was the duty of the government, out of regard to the future generations to introduce restrictive measures before the nerves of parents are finally ruined.

* * *

Peace and Quiet

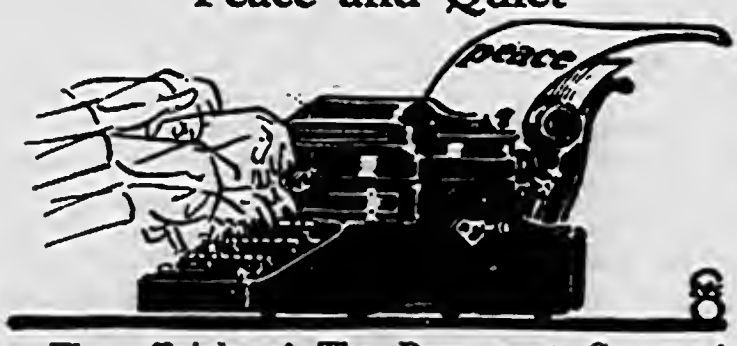

The officials of The Permanent Court of International Justice, The Peace Palace, The Hague, Holland appreciate the value of quiet. In The Supreme Court of this famous institution The Noiseless is seen quietly at work recording the august decisions of the high officials with dignity and silence.

From the Diary of Mr. Samuel Pepys

We quote the following from F. P. A.'s "Diary of Our Own Mr. Samuel Pepys" appearing in the *New York World*, issue of March 10th:

"Early up and in high humor, maugre my dreams and had some pleasant talk with my wife, and so in great content to the office, and learn that I. Cobb is on the way to health, and so to my journal and reading letters and many other tacks, all easy *save the clatter of typewriters near me, and I wish all would use the quiet kind I do myself. . . .*"

The quiet machine to which Mr. Adams refers is The Noiseless. Both he and his brilliant associate, Mr. Heywood Broun, are users of The Noiseless.

* * *

The First Official Act of Will Hays

On Saturday morning, March 4th, Will H. Hays officially took up his duties as Director of the Motion Picture Producers and Distributors. At 10.15 the same morning, Mr. Hays' secretary 'phoned The Noiseless Typewriter Company and ordered three Noiseless Typewriters to be delivered at once. The machines were installed immediately after lunch.

On Friday, March 17th, we received another order for immediate delivery from Mr. Hays, for three more standard machines and one portable, making a total of six standards and one portable now being used in his offices.

* * *

Agreed on One Thing

The Committee on Foreign Relations, of which Senator H. C. Lodge is Chairman, may not recommend a League of Nations, but both the League of Nations and the Committee on Foreign Relations agree that *quiet aids concentration*. The two organizations use Noiseless Typewriters.

THE ENEMY OF PRODUCTION
BY C. L. JORDAN

THE keynote of business today is to increase production at a minimum of expense, or to maintain the present production at a reduction in cost.

This is a problem which is attracting the attention and study of some of the most eminent scientists and business men the world over. They all agree that production is limited by fatigue. The human body can only do so much —and where more is necessary, two people must be employed, or something must be done to *curtail the sources of fatigue.*

To understand this subject better, it may be well to explain just exactly what *Fatigue* is, and what it does.

Fatigue is not, as is popularly supposed, a mere wasting away of local tissues. The act of running does not simply tire the leg muscles. It affects the whole body. Similarly, thinking does not weary the brain alone, but every part of the body.

Fatigue is a poison, generated within and distributed by the blood. Goldmark says: "A tired person is literally and actually a poisoned person—poisoned by his own waste products." Every exertion generates some waste within the body, and this waste is a poison. The eminent scientist, Mosso, demonstrated this fact by injecting the blood of a fatigued dog into the body of a second dog which was in good condition. The second dog immediately showed signs of fatigue.

In most business offices, there are two forces working towards fatigue, mental exertion and NOISE—one of the most insidious enemies of the nerves.

The constant and irritating click-clicking of the typewriter is like a thousand hammers pounding at the nerve centers—the gateway to the brain. This noise not only interrupts thought and irritates, but it is actually a menacing source of fatigue. Experiments have proved that typists, working on noisy machines, grow old-looking much faster than girls not engaged in noisy work. The evidences of noise-fatigue-poison show up in sleepless nights, in flabby necks, loss of luster in the eyes, and also in lack of enthusiasm.

The same thing is true of men who work near the incessant noise of typewriters. They are forced to bear the brunt not only of their own work, but of *needless noise-fatigue.*

And typewriter noise is needless! The Noiseless Typewriter is faster than any stock noisy machine made. It will do more beautiful work. It will last as long or longer, with fewer repairs.

And the keyboard, being more responsive, does not fatigue the operator like the keyboards of noisy machines.

But The Noiseless is more than a better, faster typewriter. It is a great advancement in making the office a better place to work in, increasing endeavor and preserving ability. A Noiseless operator does not have to combat the poison of noise-fatigue—nor do others who work in the golden silence of a Noiseless office.

Fatigue caused by mental exertion is the most harmful of all, since the mind is the center and source of all high-class effort. Hammer blow machines render the concentration of thought impossible.

The Noiseless has become the Friend of Thought and The Partner of Health—as well as the Instrument of Faster, Better Production.

It is being enthusiastically welcomed throughout the world because it speeds up output, both by its own mechanical advantages, and because it curtails fatigue.

* * *

Mr. Ericson Abroad

Mr. Ericson, our Foreign Sales Manager and Major McNab, our London Branch Manager, in seeking relaxation from their many problems of the business day, spent a recent Saturday afternoon in sight-seeing.

Mr. Ericson and Major McNab visited, among other historic places, the home of Carlyle at Chelsea. Commencing with the basement, they saw the range before which Emerson and Carlyle sat on their memorable evening meeting.

They finally reached the noise-proof attic. This attic is still in the condition in which it was used by Carlyle, with the additional inner walls about eighteen inches from the original outer walls, and the special roof.

Carlyle found that it suffocated him and was not successful in keeping out the irritating noises. He spent about three hundred pounds on this work, and as the rental of the house was at that time thirty-five pounds per annum (it is now 100 pounds per annum) this represented a considerable sum.

According to his diary, the work was accomplished by the best builders in London—Cubitts. Cubitts, incidentally, are still in existence and are users of Noiseless Typewriters.

Carlyle used a Portable, but it was a Portable desk of his own invention which he used in the garden or along the river side. It is in a glass case on exhibition with other of his inventions.

Three New Branches

Since the last issue of "Whispers," we have opened up three new branches—Cleveland, Boston and New Orleans. Our sales have increased to such an extent and the demand for a quiet office has become so great that we have been forced to establish new points of distribution.

* * *

Cleveland

The Cleveland Office, located at 2077 East Fourth Street, is under the direction of Mr. C. J. Monohan, who needs no introduction to the Office Appliance Field. Mr. Monohan's sales reports indicate that he is already out and doing and that he will do himself justice in Ohio.

* * *

Boston

Our offices in Boston, at 101 Bedford Street, under the direction of Mr. P. J. Ritter, are a source of great pride to the entire organization. Mr. Ritter is unusually well qualified as District Manager, having had many years of experience and accomplishment in the typewriter industry. With the combination of Mr. Ritter and our splendid new offices in Boston we anticipate a rapid development in Massachusetts.

* * *

New Orleans

New Orleans sales will be handled from our offices at 738 Union Street with Mr. J. F. Gibbons as District Manager. This office has just been opened two days as we go to press, but we feel very confident about the progress Mr. Gibbons will make in his new territory.

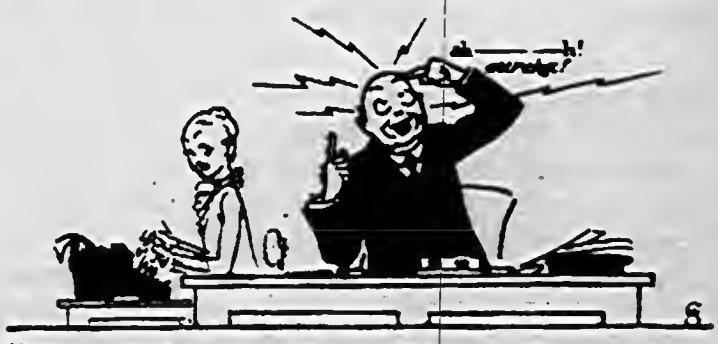

"The Silence that Gives Consent —to Thoughts

The Man who made Royal Marriage Licenses

IN the Archbishop of Canterbury's Faculty Office, in a quiet little street behind Ludgate Hill, preparations went forward for the writing of the royal marriage license of Princess Mary and Lord Lascelles.

The making of the license was a work both of toil and art. And the man who prepared it is a rare character belonging to the Early Victorian Era. Mr. Bull, the veteran clerk of the Faculty Office, is over 75 years of age, and for more than 50 years he has been engaged in laboriously writing words in Old English style with quill pens. During these 50 years he has drafted many thousands of licenses for the Archbishop. He has prepared several royal marriage licenses in the past, including those of the King and Queen, Prince Arthur of Connaught, and Princess Patricia.

Mr. Bull has spent all his 50 years of work in one office, bending over the same desk in a musty old room, with a dry old-fashioned legal atmosphere. For some 30 years its gloom was only relieved by candle light.

With his silvery white hair and his lazily humorous eyes, Mr. Bull is a genuine figure of humanity—the grandfather of the story books—and to him it will be a matter of delight that the last royal marriage license which he has engrossed (for in the future, these licenses are to be printed) is that of England's happy Princess.

For two long days he stooped over a roll of parchment nearly a yard square in a room locked against any interruption. By his side were twenty quill pens of various thicknesses necessary for writing different portions of the document.

Royal licenses are the largest marriage licenses prepared. They are written entirely in Old English lettering with black ink. Lines drawn with red ink under certain words relieve the somberness of the document.

Under the Royal Marriage Act of George III, no member of the Royal Family in the direct line can marry without first obtaining a royal marriage license bearing the consent of the King and the signature of the Primate of all England who is the only authority to issue the royal license.

A royal marriage license which costs £50 obviates the formalities connected with an ordinary marriage license, such as the swearing of affidavits and a personal application by one of the parties concerned. Princess Mary's marriage license, like other royal licenses, will be preserved among the state documents.

Incidentally, Mr. Bull's Office is directly behind the London Branch of The Noiseless at 4 St. Paul's Churchyard.

Our First Conference of Branch Managers

THE first Conference of Branch Managers, Factory and Sales organization of the Noiseless Typewriter Company was held at Middletown, Conn., and New York City, beginning Tuesday, January 3. On Tuesday evening all the Branch Managers and the sales organization set out for Middletown in a car reserved for their use.

Conferences were held both morning and afternoon in the factory on Wednesday, and on Thursday a trip through the factory was included in the schedule.

On Wednesday night all the bowling alleys at the Y. M. C. A. were chartered and the factory and sales organizations engaged in "mortal combat." The factory representatives made the most pins lay down, but we are not telling how mortifying the total was.

Thursday night, the Branch managers and sales organization entrained for New York. Friday was spent at the home office in individual conferences. E. J. Sheehan, General Sales Manager, was in charge of the conferences.

Friday night, the conference was brought to a close with an excellent dinner which was held at the University Club, New York City.

Those attending the conference included Dr. C. W. Colby, President; A. F. Hebard, Vice-President; E. H. Russell, Treasurer; E. J. Sheehan, General Sales Manager; J. A. Ruffin, Works Manager; W. Ericson, Export Manager; S. P. Taylor, Manager of Agencies; G. S. Odell, Manager School Department; H. J. Lance, Advertising Manager; C. Y. Grayson, New York Sales Manager; B. Vos, Philadelphia Sales Manager; P. J. Ritter, Boston Sales Manager; W. G. Lasher, Pittsburgh Sales Manager; C. J. Monahan, Cleveland Sales Manager; H. S. Petry, Detroit Sales Manager; J. S. Mineau, Chicago Sales Manager; W. A. Denvir, St. Louis Sales Manager; K. Archibald, Canadian Sales Manager; G. G. Going, Works Manager; A. Jenner, Superintendent; R. M. Moore, Assistant Superintendent; J. J. Brock, Production Engineer; A. W. Austin, Accounting Department, and A. H. Hovey, Accounting Department.

The Curse of Noise

This brilliant editorial appearing in the London Times of March 3rd covers the whole subject of Noise unusually well and we feel certain that it will prove interesting to those who already appreciate the malign results of Noise on workers, but who have not yet fully understood the cause of its harmful effects on the human nervous system.

Our Medical Correspondent tells us, what some of us knew before, that we do not grow accustomed to noise. We may persuade ourselves that we do grow accustomed to it, out of a base compliance with what we are pleased to call modern civilization; but in that case our bodies are less servile than our minds; they refuse to be inured to it and to tell themselves lies about it. When they are tired by noise they *are* tired, and there is an end of it. But the lies of the mind on this subject avail it nothing; indeed it exhausts some of its energy in telling them. We think we can ignore noises, so that they are to us as if they were not; but in that we are mistaken. The process of ignoring them is itself active, not passive; it is a process of refusal, which for that very reason exhausts us more than any active process of acceptance. This becomes clear, our Correspondent says, when we are ill; for then we have not the energy needed for refusal, and noise grows intolerable to us. One may put it another way. There are many who believe that those who do not notice ugliness of any kind are immune from it. The more we learn the more clearly we discover that the universe is not made that way. The senses have their higher and their lower uses; they make us aware both of danger and of beauty; and if we blunt them from indifference to beauty we also cease to be aware of danger. There is a healthy as well as a morbid sensitiveness; *and the hatred of noise, like the hatred of dirt, is healthy and natural. For noise, like dirt, is chaos, and a chaos yet more impossible to ignore.* Man is so made that he needs and desires order; he is bewildered and devitalized by a lack of purpose in his surroundings; mere untidiness, being lack or failure of purpose, makes him unhappy, whether he knows it or not; and beauty, as Professor Lethaby has well said, is a kind of glorified tidiness, being matter utterly controlled by some spiritual purpose. Of this we are very imperfectly aware with regard to things seen; but with regard to things heard we are not aware of it at all. We do not know how chaos of sound, which is ugliness, untidiness, impairs our sense of purpose and all our higher faculties, as it tires our nerves in the effort to ignore it. We have the notion, in this as in other things, that beauty is a luxury, whereas it is a necessity, without which we are even inferior animals.

Our Correspondent says that silence is one of the great healers, with pure air and sunlight. That is true, not merely because silence is rest, but also because it is that absence of chaos, in which order can be imagined and grow. The creative faculty which produces music needs silence; and music itself is not a luxury, but a necessity; it is what sound ought to be, and the hearing of it increases our sense of order and purpose, and with it our very physical energy. As men march best to music, so they live best to it; in all respects they live best in an orderly world created by themselves, whether it be a world of architecture, of gardens, of patterned forms and colors, or of patterned sounds. But the world of our great towns, in which most of us now live, is one of disordered sounds even more than of disordered sights; and the strange thing is that we are proud of it and think it a sign of energy, when it is really a sign of mere slovenliness, insensitiveness, and failure to mean anything. In a civilized world any unnecessary noise would be resented as wanton rudeness and an offense to the common spirit; the half-animal, half-mechanical, hoot of a motor-car in a hurry would be hated like the oath of an impatient lunatic. Sound of all kinds would be judged as expressive either of good or of evil, and there would be a general effort to make all sounds expressive of good, that is to say beautiful, or to suppress them. But now we are like street boys who can only make themselves heard by yelling at each other, merely because they have the habit of yelling; we live in a world of competitive noises, and hitherto we have supposed that their ugliness did not matter, because most of us are indifferent to ugliness. But now science, which has so long seemed the ally of the philistine against the artist, begins to declare for the artist. It tells us that this noise we make is mere waste, and, like all waste, a destroyer even of brute energy. It tells us that even the philistine must learn to love beauty and hate ugliness, in mere self-protection; and perhaps he will listen at last to the man of science, though he has been deaf for so long to the artist.

100 Banks using The NOISELESS

The One and Only Quiet Typewriter

1 American Bankers Association
2 American Bank & Trust Company of Denver, Colo.
3 American Exchange National Bank
4 American Foreign Banking Company
5 Anglo South American Bank, The, London
6 Bank of British South Africa
7 Bank of California
8 Bank of Hamilton
9 Bank of Italy
10 Bank of Manhattan County
11 Bank of Montreal
12 Bank of North Dakota
13 Bank of Rome
14 Bank Marmorosch, Blank & Company
15 Bankers Trust Company
16 Bankers Trust Company of Denver, Colo.
17 Canadian Bank of Commerce
18 Central Trust Company of Chicago
19 Chase National Bank
20 Chemical National Bank of New York
21 Citizens Saving & Trust Company of Cleveland, O.
22 Cleveland Trust Company
23 Commercial Acceptance Trust Co. of Chicago, Ill.
24 Comm'l Bank of Spanish America, San Francisco, Cal.
25 Comptoir National d'Escompte de Paris
26 Equitable Trust Company
27 Exchange Trust Company, Tulsa, Okla.
28 Farmers Loan & Trust Company of New York
29 Farmers & Merchants Nat'l Bank, Los Angeles, Cal.
30 Federal Reserve Banks
31 Fidelity & Casualty Company
32 Fidelity National Bank, Spokane, Washington
33 Fidelity Trust Company, Newark, N. J.
34 Fidelity Trust & Savings Bank, Fresno, Cal.
35 Fifth Avenue Bank
36 First Federal Foreign Bank Corporation
37 First National Bank, Seattle, Wash.
38 First National Bank, San Francisco, Cal.
39 First National Bank, El Paso, Texas
40 First National Bank, Rexbury, Idaho
41 First National Bank, Boston, Mass.
42 First National Bank, Pittsburgh, Pa.
43 First National Bank, St. Louis, Mo.
44 First National Corp.
45 First Wisconsin National Bank & Trust Company
46 First Trust Company, Lincoln, Nebr.
47 Fort Dearborn National Bank, Chicago, Ill.
48 Guarantee Title & Trust Company, Cleveland, O.
49 Guaranty Trust Company
50 Guarantee Trust & Savings Bank, Los Angeles, Cal.
51 Guardian Savings & Trust Company, Cleveland, O.
52 Illinois Trust & Savings Bank, Chicago, Ill.
53 Imperial Ottoman Bank, The, London
54 International Banking Corporation
55 Interstate Trust & Banking Co., New Orleans, La.
56 International Acceptance Bank
57 Liberty National Bank
58 London Co. Westminster & Parr Bank, The, London
59 London Joint City Midland Bank, The, London
60 Los Angeles Trust & Savings Bank, Los Angeles, Cal.
61 Lumberman's Trust Company, Portland, Oregon
62 Mechanics & Metals National Bank
63 Mellon National Bank, Pittsburgh, Pa.
64 Mercantile Bank of the Americas
65 Mercantile Trust Company
66 Mercantile Trust & Deposit Company
67 Merchants National Bank of New York
68 Merchants National Bank of Los Angeles
69 Midland Bank, Cleveland, O.
70 National Bank of Commerce
71 National Bank of South Africa, Ltd.
72 The National Bank of Scotland, London
73 National Bank of the Republic, Chicago, Ill.
74 National City Company
75 National City Bank
76 Oakland Bank of Savings, Cal.
77 Old Colony Trust Company, Boston
78 Park Union Foreign Banking Corporation
79 Peoples Savings & Trust Company, Pittsburgh, Pa.
80 Philadelphia Trust Company
81 Provident Life & Trust Company
82 Riggs National Bank, Washington, D. C.
83 Royal Bank of Canada
84 Security Trust & Savings Bank, Los Angeles, Cal.
85 Stockyards National Bank, St. Paul, Minn.
86 Title Guarantee & Trust Company
87 Title Guarantee Company
88 Title Guarantee Trust & Saving Co., Los Angeles, Cal.
89 Union Bank & Trust Company, Los Angeles, Cal.
90 Union Commercial National Bank, Cleveland, O.
91 Union Savings Bank, Pittsburgh, Pa.
92 Union Trust Company, Pittsburgh, Pa.
93 Union Trust Company, Chicago, Ill.
94 Union Trust Company, Cleveland, O.
95 United States Guarantee Company
96 United States Mortgage & Trust Company
97 United States National Bank, Denver, Colo.
98 United States Trust Company, Omaha, Nebr.
99 Winters National Bank, Dayton, O.
100 Woodlawn Trust & Savings Bank, Chicago, Ill.

Note The above named Banks use a total of over 3000 Noiseless Typewriters or an average of over thirty each

The NOISELESS PORTABLE TYPEWRITER

OPERATING INSTRUCTIONS

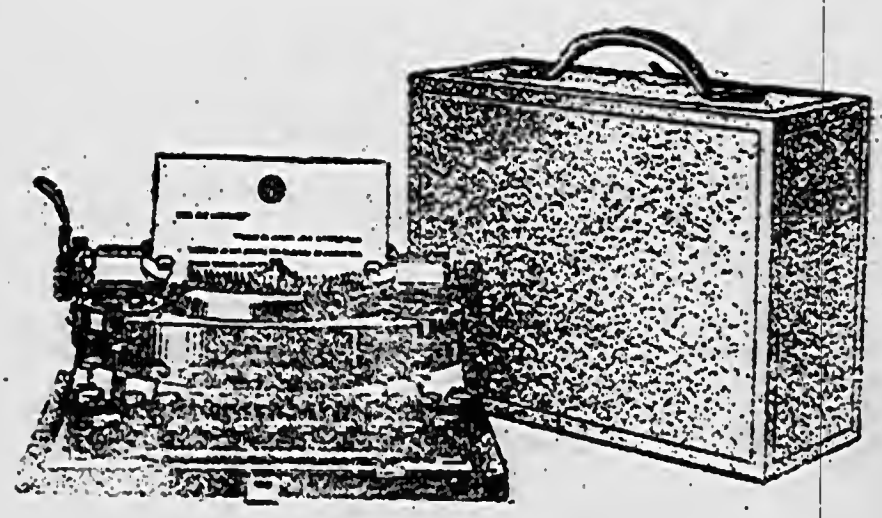

658

Operating Instructions

The NOISELESS PORTABLE TYPEWRITER

THE NOISELESS TYPEWRITER CO.

Executive Office—253 Broadway
NEW YORK CITY

Factory
MIDDLETOWN, CONN.

761

659

Copyright 1922
The Noiseless Typewriter Company

Introduction

IN our opinion The Noiseless Portable means the universal use of the typewriter in the home. There is no possible doubt that the typewriter can be made a great agency in education, and in this work The Noiseless Portable will have the foremost place, because it is sold at a moderate price and can be used at any place—at any time without disturbing anyone. In addition to its quiet, The Noiseless Portable possesses many other exclusive features which we have listed in this booklet, at the same time explaining their operation.

THE NOISELESS
TYPEWRITER COMPANY

Index

	Page No.
Adjusting Margins	8
Attaching Cover	14
Back Spacing	10
Capital Letters	10
Carbons Copies	10
Care of the Machine	14
Carriage Release	8
Erasing	11
Exclusive Features	5
Figures, Special Characters, etc.	10
Insertion of Paper	7
Introductory	3
Margin Release	8
Moving Carriage	8
Printing Point	7
Proper Touch	9 and 15
Returning Carriage	9
Ribbon	12
Shift Keys	10
Spacing Between Lines	8
Spacing Between Words	10
Variable Line Spacer	8
Writing Line	7
Writing on Ruled Lines	8

Exclusive Features
of
The NOISELESS
PORTABLE TYPEWRITER

Non-Destructible Standard Size Metal Platen

The exclusive Noiseless feature of pressure printing makes possible the employment of a metal platen—a smooth, ideal printing surface.

Light Touch

A quick, light, staccato touch is all that is required to obtain uniformity and speed. It is not necessary to follow the key to the depth to which it travels.

Maximum Ribbon Life

Increased at least 25% because pressure printing does not destroy the fabric.

Durability

There are no hammer blows to wear and jolt the mechanism. Every effort has been made to obtain the utmost simplicity of design, the highest degree of permanent rigidity throughout the machine.

Margin Release

After margins have been established and an exception arises where the operator desires to go beyond one of these margins, the margin release lever does away with the necessity of moving the margin stops.

Right and Left Hand Shift Keys

The Noiseless Portable has both right and left hand shift keys thereby saving considerable time for the operator by eliminating the annoyance of crossing the keyboard with the right hand when shifting for Capitals or Figures.

Quiet Operation

The Noiseless Portable can be operated anywhere without annoyance or disturbance to those nearby. In trains, hotels the home and everywhere this feature alone justified the use of The Noiseless Portable.

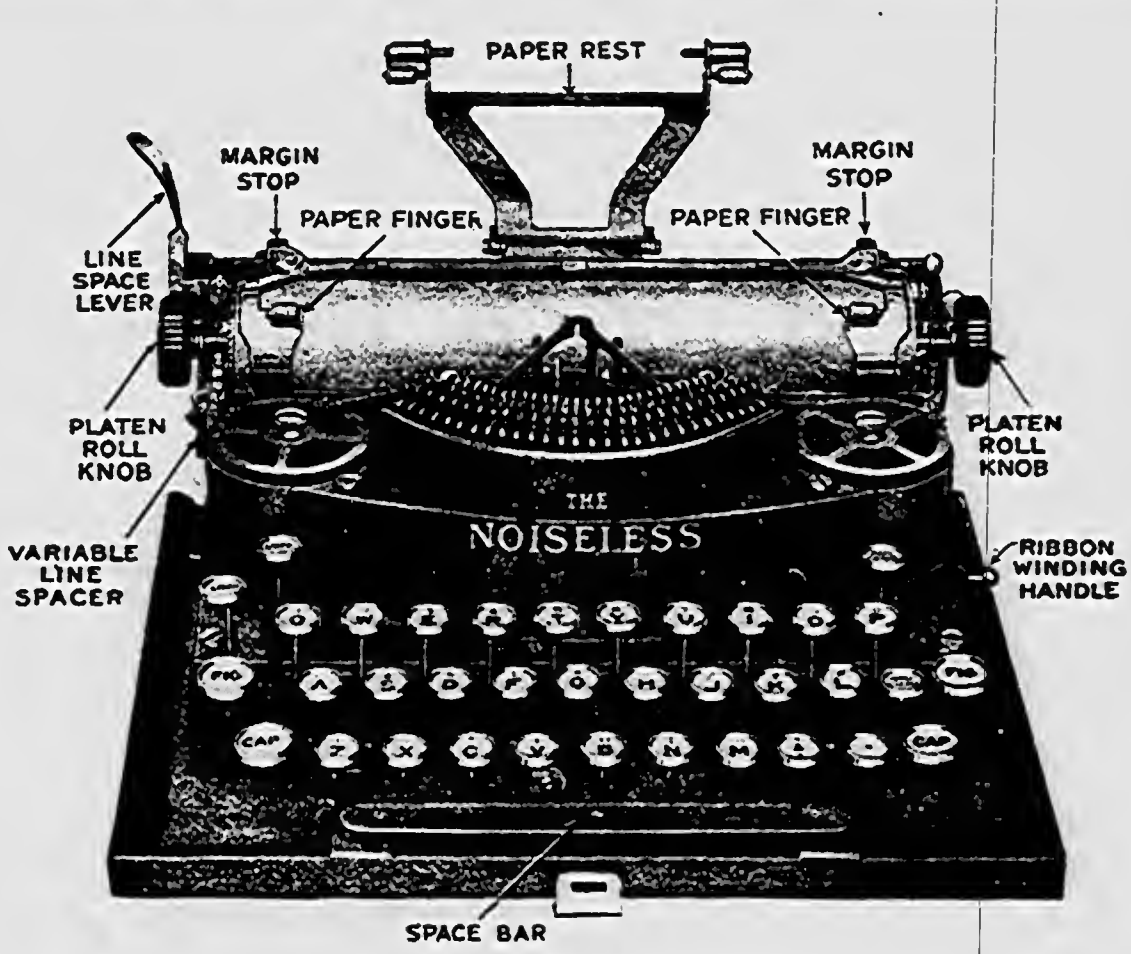

Plate A

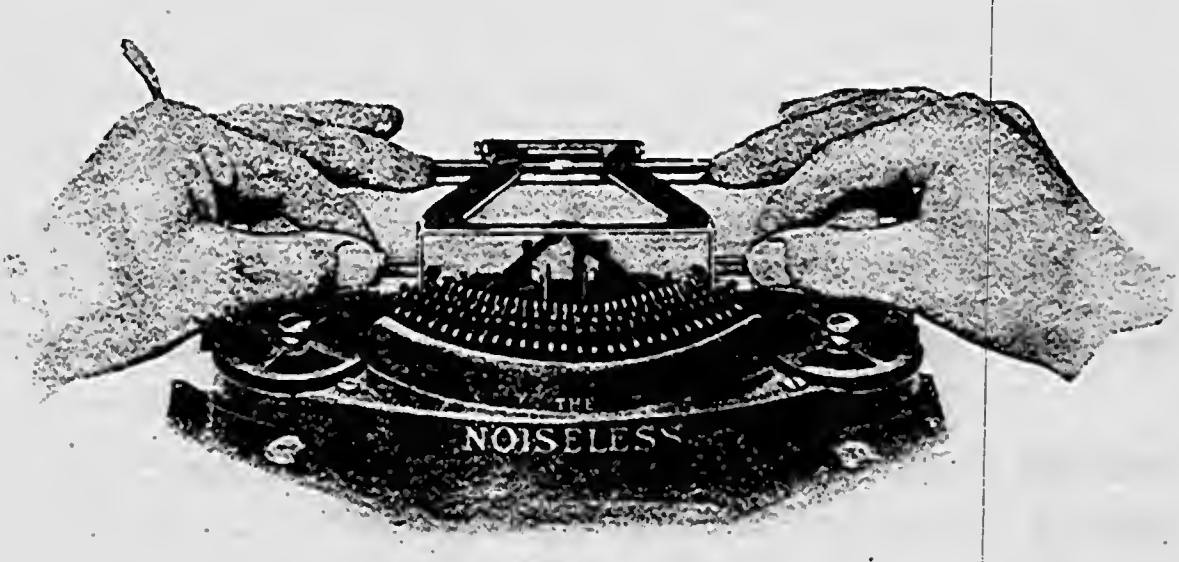

Plate B

Operating Instructions
for
The NOISELESS
PORTABLE TYPEWRITER

After cover has been removed, pull down Space Bar to operating position indicated in Plate A.

Raise Line Space Lever to upright position indicated in Plate A.

Place Paper Rest (Plate B) in operating position, by withdrawing Thumb Knobs until Paper Rest can be raised to position indicated in Plate A.

Insertion of Paper

Insert lower edge of paper into slot back of platen roll, Plate A and turn platen roll knob, Plate A until paper is in position to be adjusted to desired writing line.

The Writing Line is located immediately above the aligning scales, Plate C and the characters will print directly above and in line with the graduations on these scales.

The Printing Point is located directly in line with the upper and lower type guides, Plate C.

If it becomes necessary to straighten paper, bring Release Lever, Plate C forward. This releases the paper, leaving both hands free to adjust paper to desired position. Do not fail to return paper release lever to normal position.

Spacing Between Lines

To space between lines, use the line space lever, Plate C and at the same time return the carriage to left margin. *Do not space by using platen roll knob.*

SINGLE SPACING: Move space regulator (Plate C, back.)

DOUBLE SPACING: Move space regulator (Plate C, forward.)

VARIABLE SPACING ONLY: Lift Variable Line Spacer (Plate C) when writing on ruled lines, forms, etc. The platen roll may then be turned freely without regard to regular spacing.

Moving Carriage to Right or Left

Press forward either of the Carriage Release Levers, Plate C and while holding the lever, move carriage to desired position. Then release lever.

Adjusting Margins

Move carriage so that printing point is located where margin is to be established. Then by pressing down margin stop plunger Plate A, slide margin stop to right or left until it engages margin stop release. Adjust right hand margin similarlv.

Typing Beyond Established Margins

LEFT MARGIN: For marginal notes and temporary margins, depress margin release key, Fig. 7, Plate D and while holding key down move carriage to desired margin.

RIGHT MARGIN: Eight spaces after bell rings, keys will lock. If it becomes necessary to go beyond established right margin, depress margin release key.

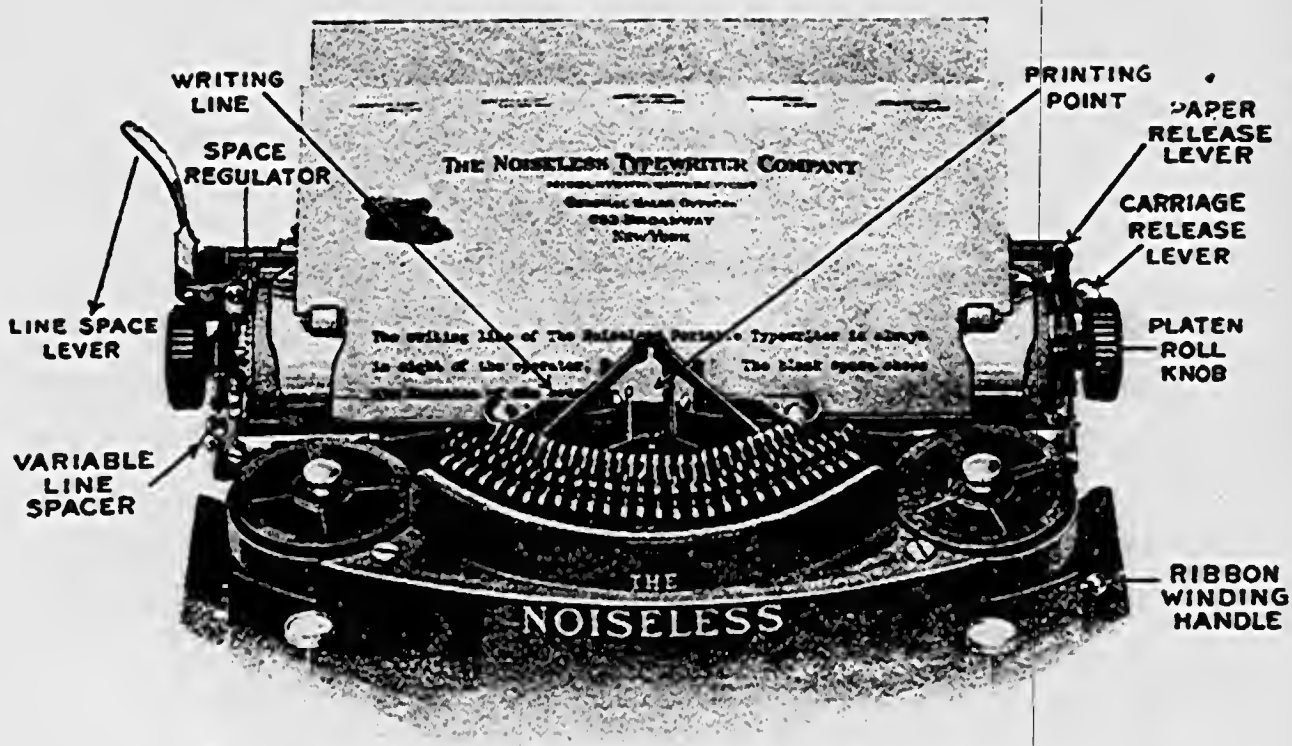

Plate C

Returning Carriage

The Line Space Lever should be used for this purpose, Plate C. This enables the operator not only to return the carriage, but at the same time to advance the paper for the next line. Use of the Line Space Lever eliminates possible variation of spacing between lines which may occur if paper is advanced by turning the platen roll knob.

Important

Proper Touch

In order to obtain speed and uniformity of registration it is necessary that the operator use a light, quick, staccato touch. Do not attempt to follow the key to the entire depth to which it travels. Until the operator becomes accustomed to the absence of noise, there is a natural attempt to create it by applying unnecessary energy to the keyboard.

Spacing Between Words and Indenting for New Paragraph

To space between words, depress Space Bar with Thumb (Fig. 5, Plate D).

Capital Letters

When Capital Letters are required, hold down firmly either of the keys marked "CAP" (Figs. 4 and 6, Plate D) while printing character. If it is necessary to write more than one capital letter, press Capital Shift Key Lock, (Fig. 1, Plate D). To release Shift Lock, press either Capital or Figure Shift Keys.

Figures or Other Characters Appearing on Upper Half of Keys

Hold down firmly either one of the keys marked "FIG." (Figs. 3 and 8, Plate D), while printing character. Lock (Fig. 2, Plate D), to be used as in the case of capitals.

Back Spacing

The Back Spacer is conveniently located as shown in Fig. 9, Plate D, and is to be used for returning the carriage one or more spaces to the left.

Carbon Copies

As the average number of carbon copies made on a portable typewriter is three, we recommend using a medium (7-pound) carbon paper. When making 4 or 5 copies, use light (4-pound) carbon paper.

The "Noiseless" Brand of Carbon Papers or a quality approximating it in texture *must* be used to obtain satisfactory results.

Plate D.

Erasing

Turn Platen upward several notches. Carbon copies are easily erased while in this position. No need to remove them from the machine. Our metal Platen provides an ideal erasing surface, insuring clean corrections.

Ribbon Economy

With the elimination of the hammer-blow type action, puncturing of even the thinnest paper is made impossible. The ribbon is never cut and will function properly so long as ink remains. There is no broken fibre to clog the type faces.

Removing Ribbon

To remove ribbon, wind entire ribbon on right hand spool by turning ribbon winding handle. Ribbon handle turns left spool when in normal position; when pulled out it turns the right spool, Plate E. Grasp ribbon in position indicated in Plate F Points A and B, and detach from guides by raising. Remove covers from Ribbon Cups by lifting. Detach Ribbon from left Spool and remove from right cup. As every Noiseless Ribbon is equipped with a core, the one from discarded ribbon need not be retained.

Putting on New Ribbon

A detailed sketch of left and right ribbon cups, with ribbon ready to be placed in position is shown in Plate E. Attach ribbon to the right ribbon core indicated in Plate E. Bring loose ends of ribbon over to the left Cup, Plate E, and set brass bound end in left-hand ribbon slot. Grasp ribbon points A and B and drop ribbon down into ribbon guides back of type guide, Plate F, as indicated. Replace ribbon cup covers and turn ribbon winding handle Plate A, about two revolutions, and ribbon is ready for use. (Ribbon must feed from the side nearest the Platen Roll as indicated in Plate F).

Automatic Ribbon Feed

The Noiseless Portable is equipped with an automatic ribbon feed, so that when the ribbon has wound itself completely on one spool it is automatically reversed and is rewound on the empty spool

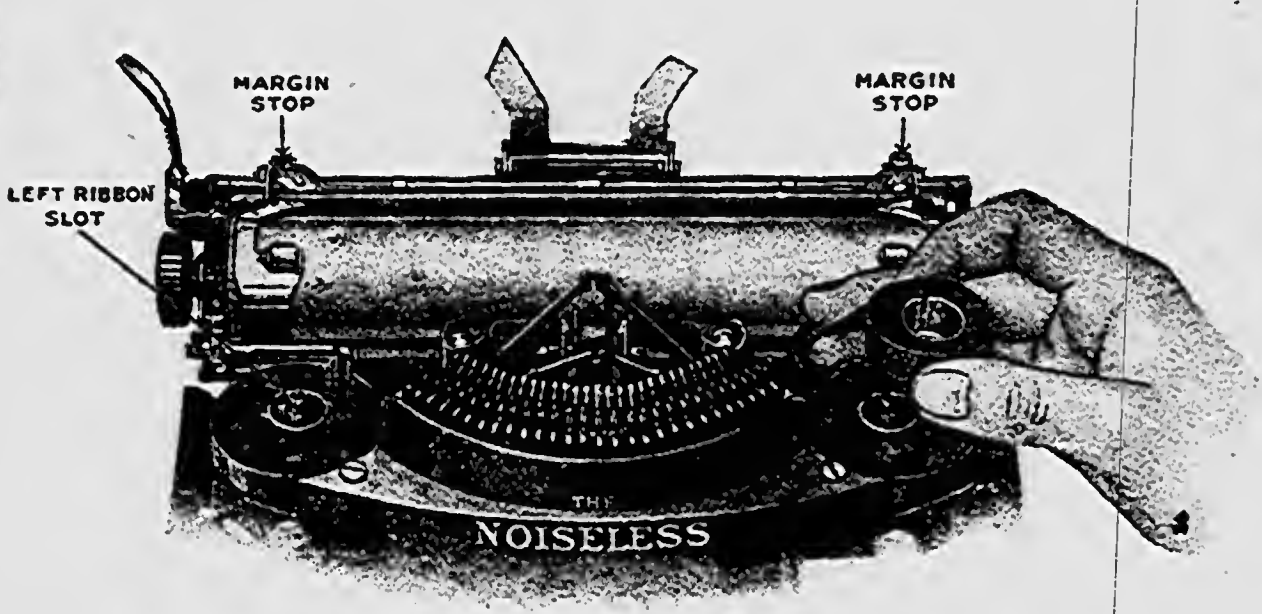

Plate E

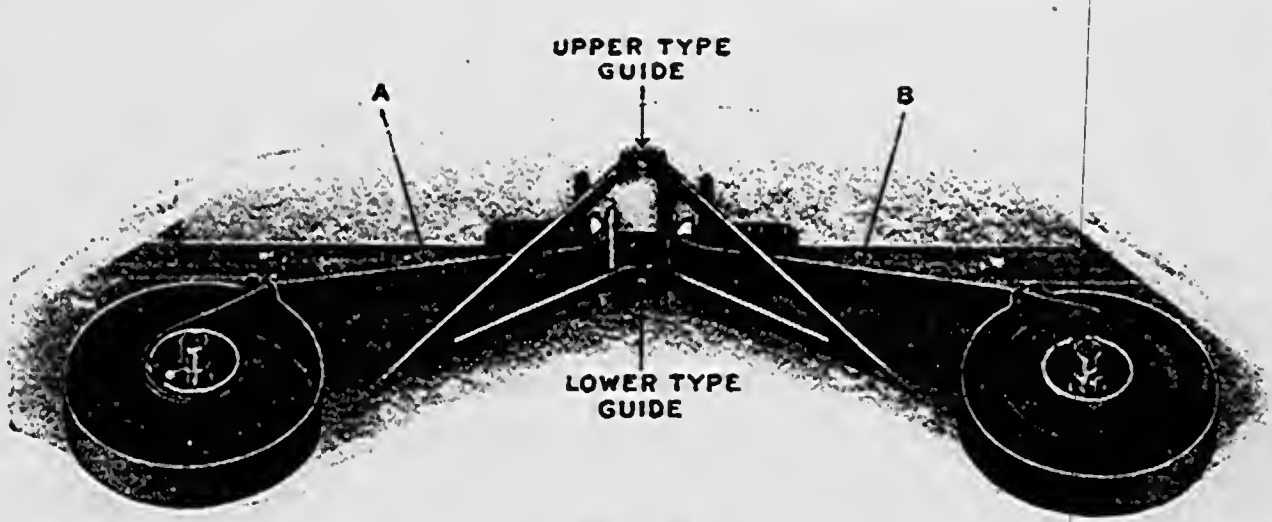

Plate F

Care of
The NOISELESS
PORTABLE TYPEWRITER

It is unnecessary to clean Noiseless type when regular record ribbon is used. However, after using copying ribbon it is necessary to clean the type with brush furnished with machine. Do not use any liquid.

Keep carriage rail (just back of platen) clean using cloth once or twice a week and apply oil. With every mechanism it is essential that all moving parts and bearings be kept lubricated. Follow this principle in the care of The Noiseless Portable. Use a light typewriter oil.

When not in operation keep the machine enclosed in case.

Attaching Cover to Machine

Slide paper fingers to extreme right and left with handles provided for this purpose. Drop Line Space Lever. Raise Space Bar. Center Carriage to permit paper rest to drop into position indicated in Plate B. Depress Capital Shift Key to force thumb knobs into position.

Engage cover hooks in metal openings at rear of baseboard and close case, being very careful to see that lock falls into position.

Proper Touch

A printed page of beautiful appearance will be produced if the operator will follow one very simple direction.

A light, quick staccato touch should be used. Do not use a touch which dwells on the key. Touch the key quickly and get the finger away.

Do not attempt to follow the key to the entire depth to which it travels. Until the operator becomes accustomed to the absence of noise, there is a natural attempt to create it by applying unnecessary energy to the keyboard.

The key action of the Noiseless Portable is the fastest of any typewriter.

THE NOISELESS
TYPEWRITER COMPANY

GOING PATENT 1,471,152 FILED AUG. 11, 1919.

TYPE ACTION IN REST POSITION

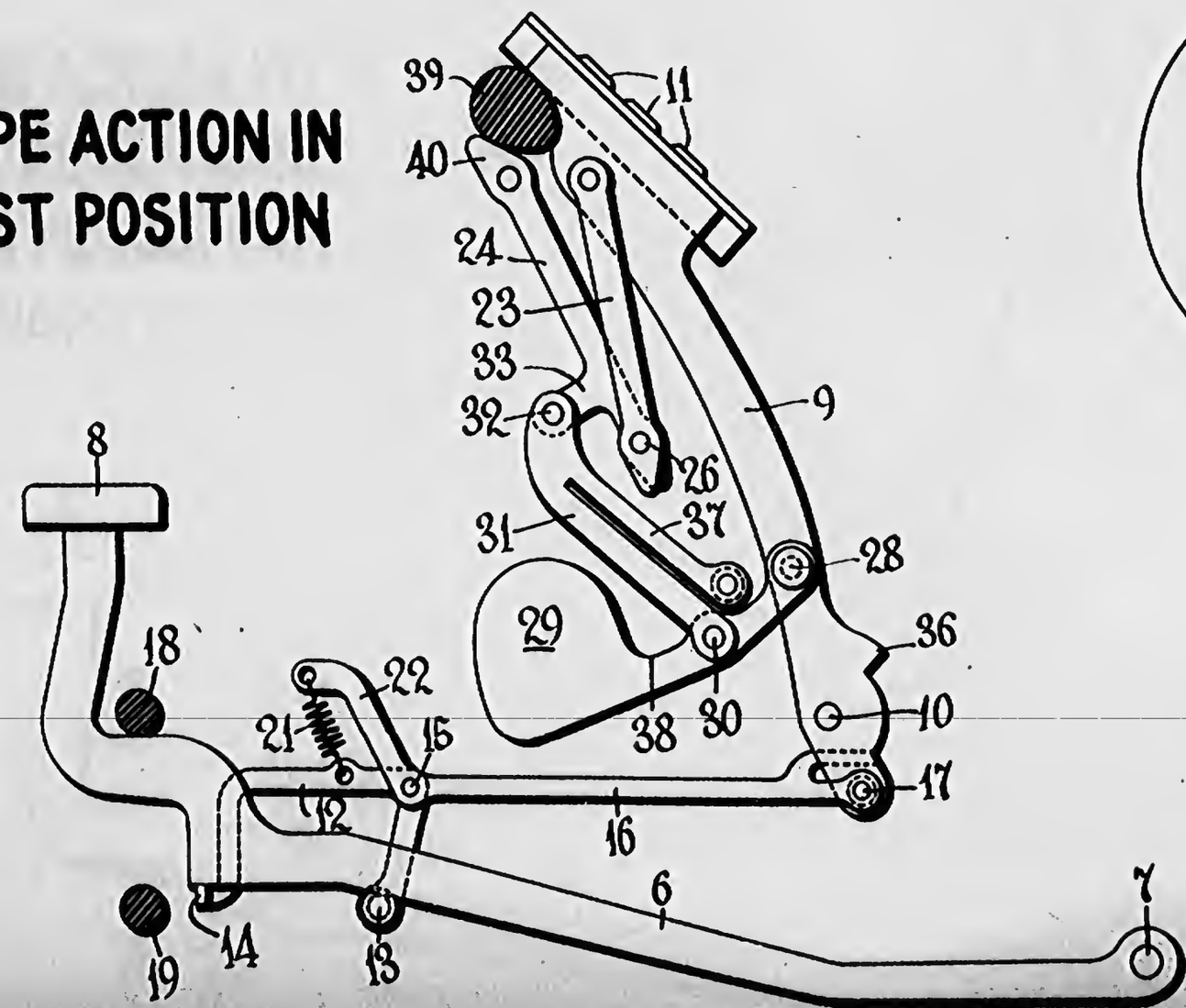

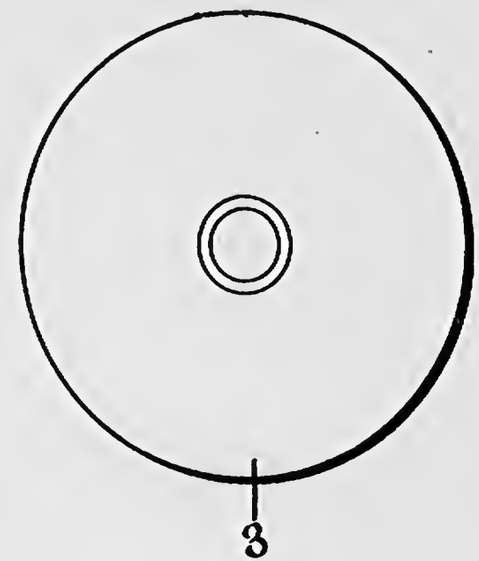

776

673

GOING PATENT 1,471,152 FILED AUG. 11, 1919.

TYPE ACTION WITH KEY LEVER ARRESTED & TYPE BAR MOVING TOWARD PLATEN

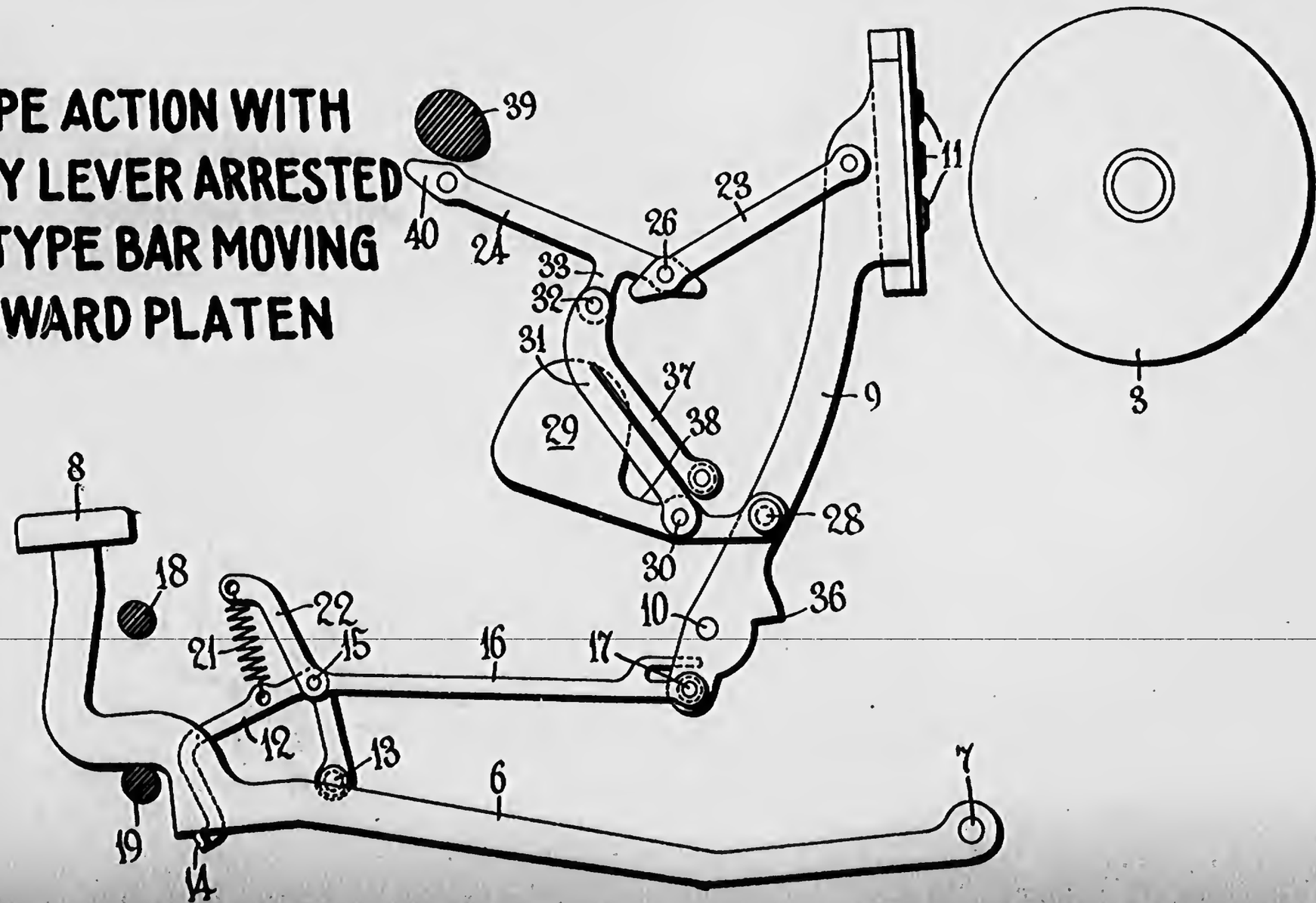

777

674

GOING PATENT 1,471,152 FILED AUG. 11, 1919.

TYPE ACTION IN PRINTING POSITION

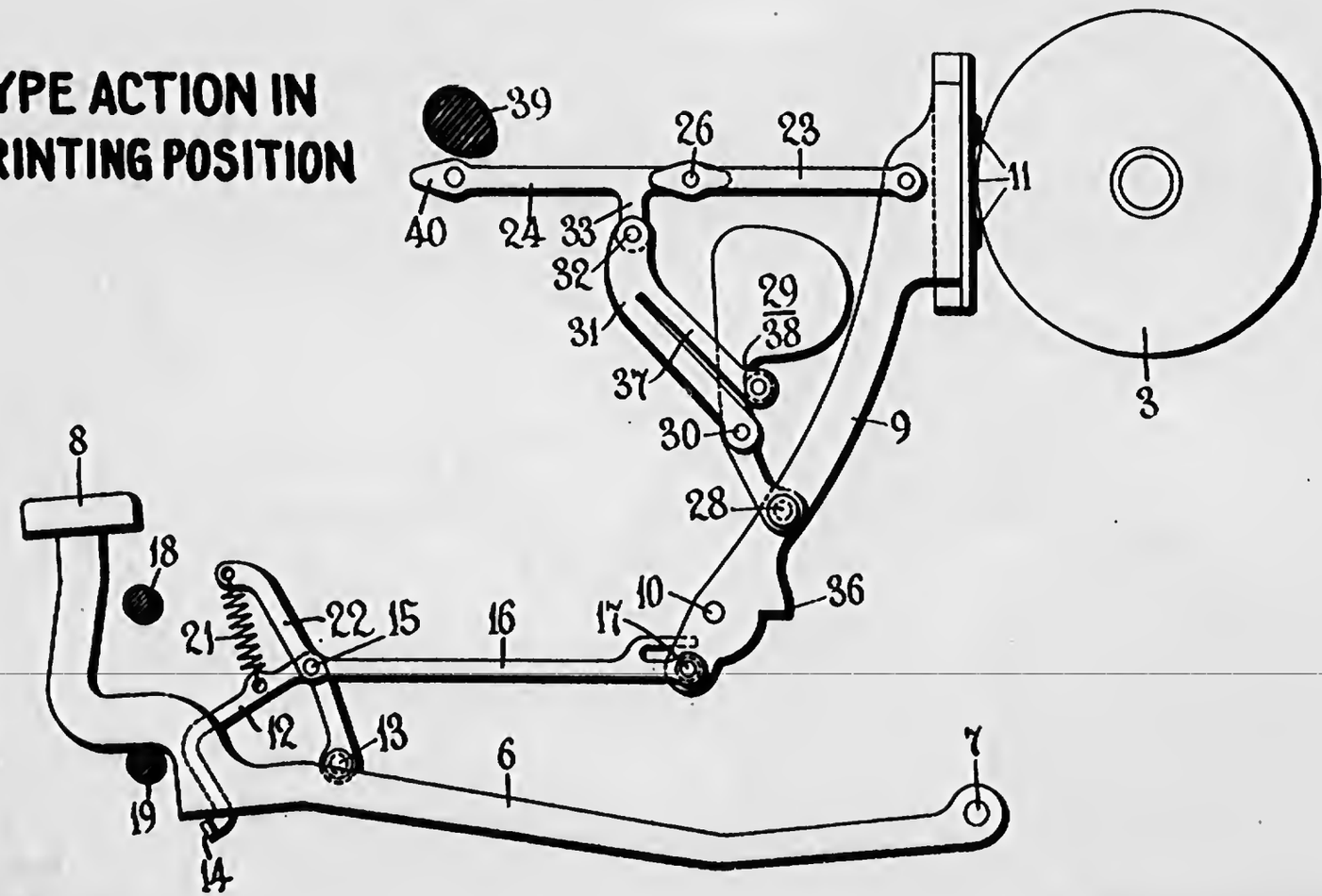

778

675

JOERISSEN PATENT REISSUE 19,076.

FIG'S 5 & 6 ENLARGED FOUR TIMES.

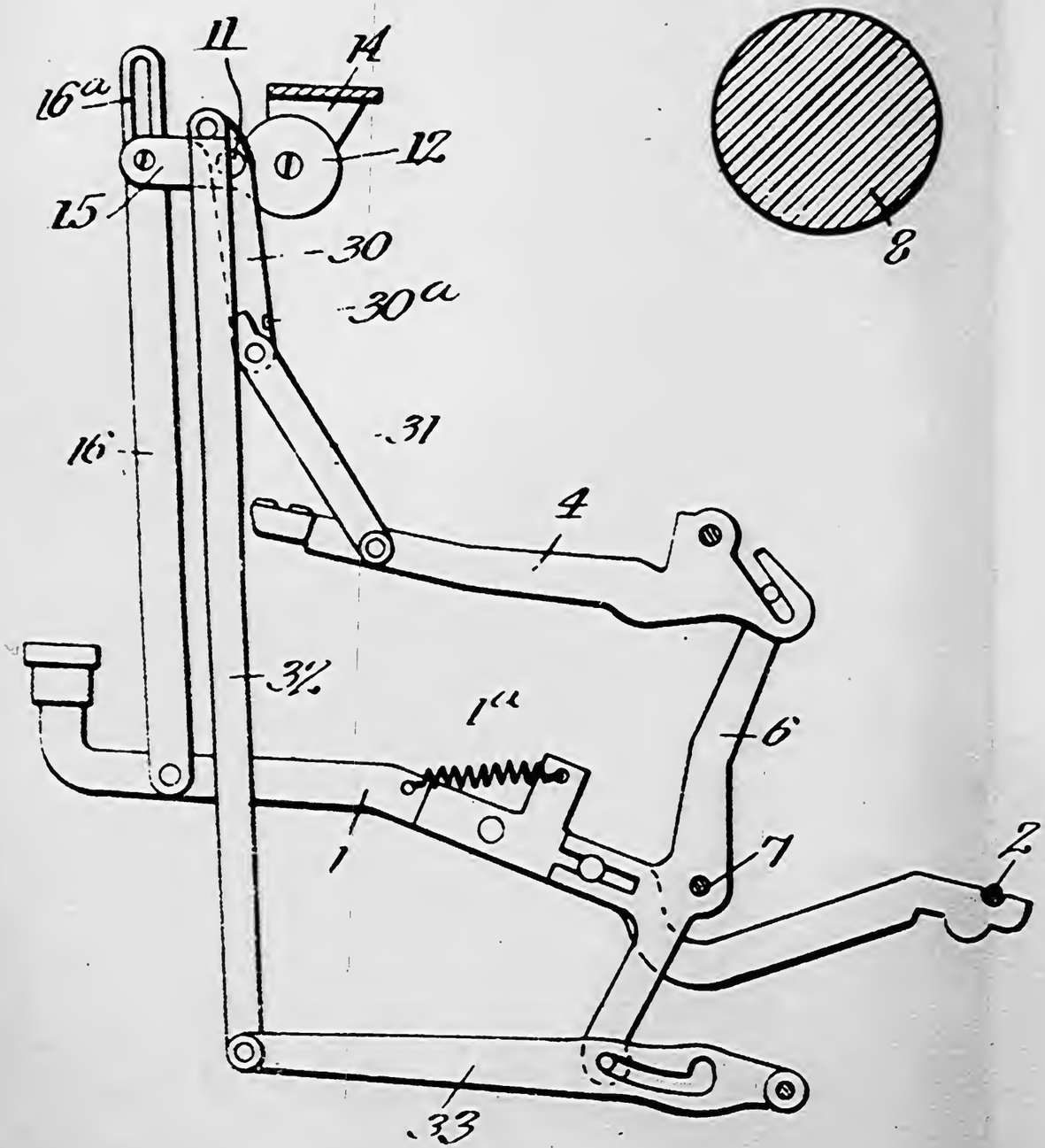

Fig. 5.

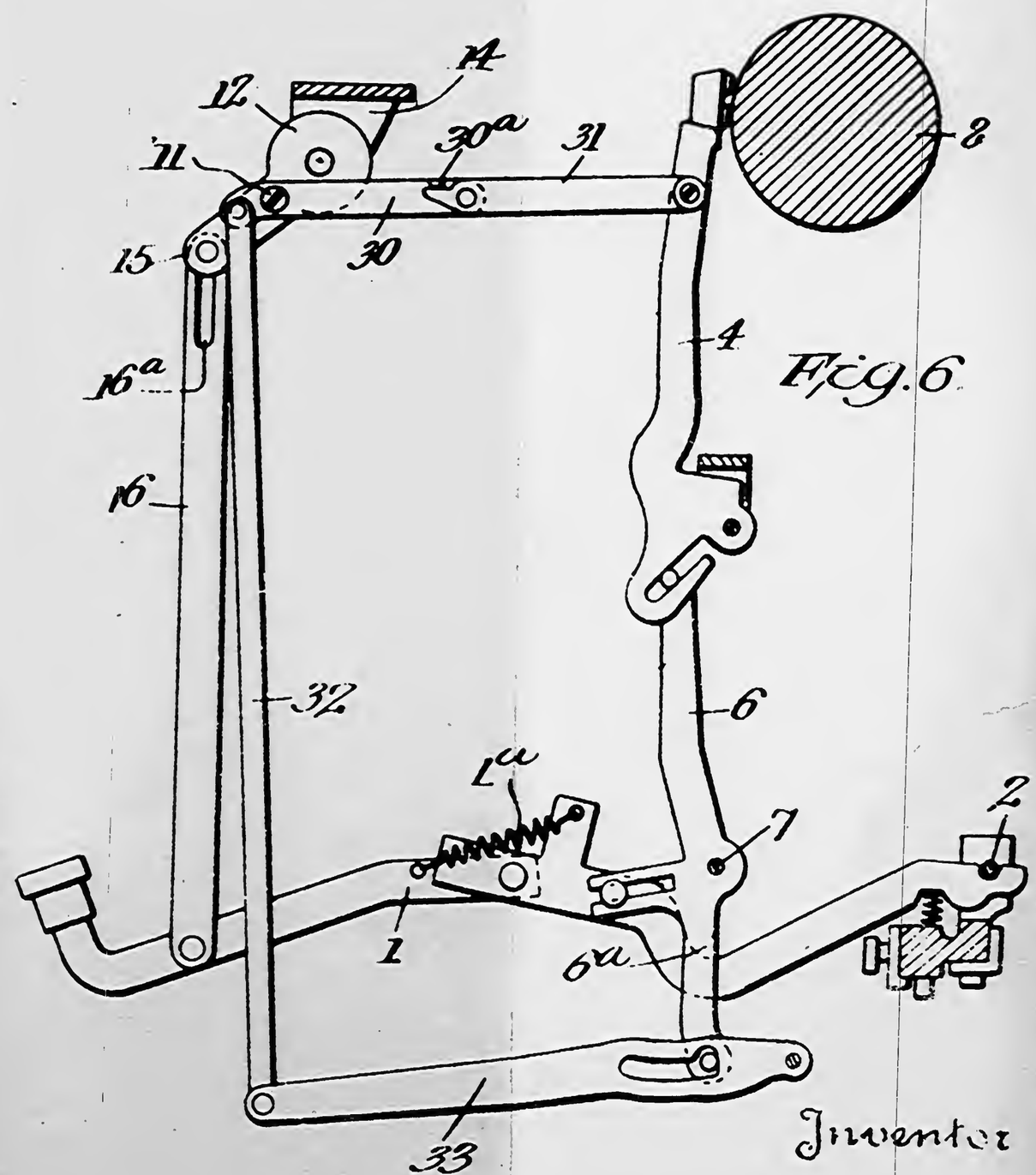

Fig. 6.

Inventor

Carl A. Joerissen

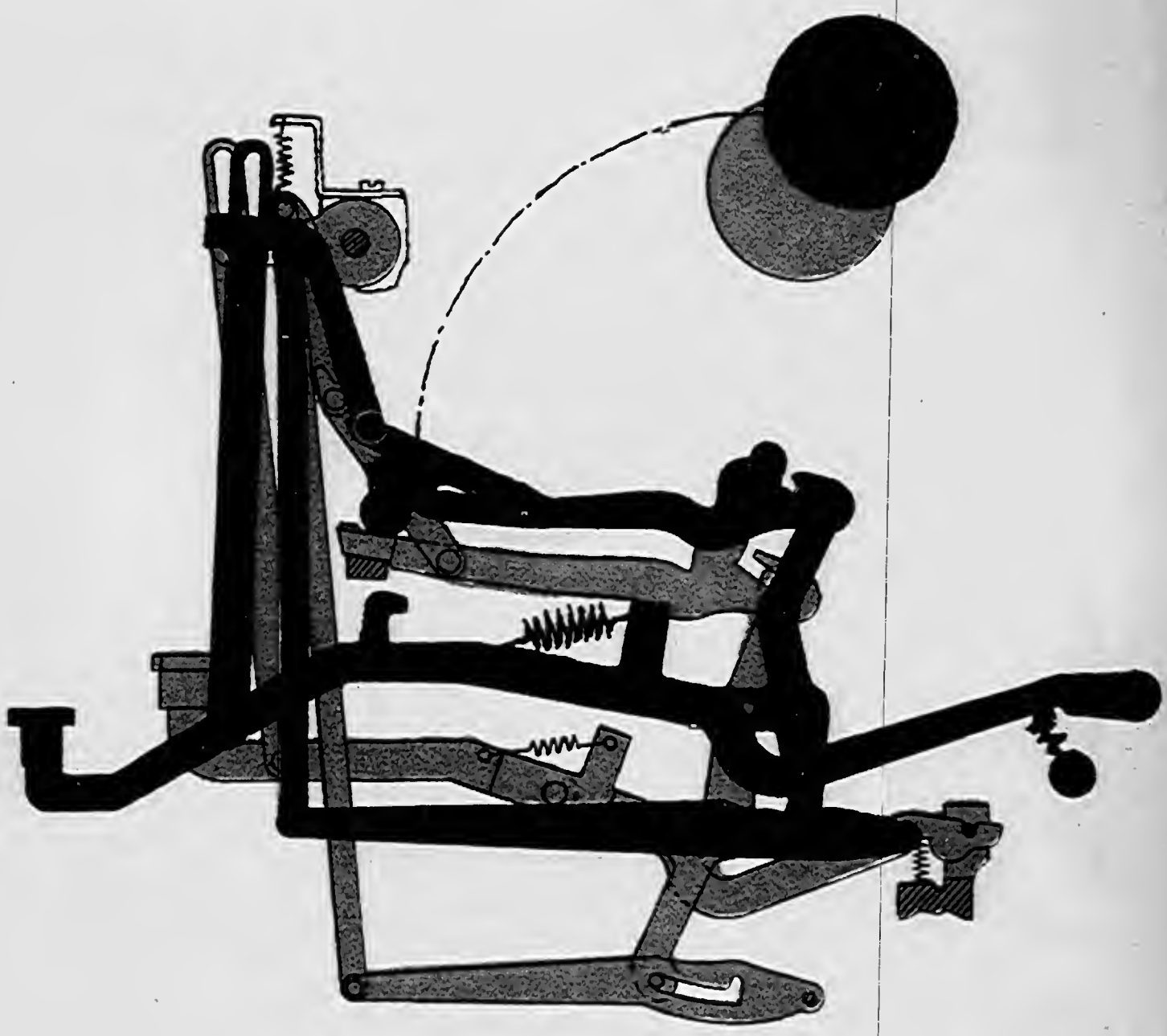

The showing in green represents the parts as they appear in Fig. 5 of the Joerissen reissue patent No. 19,076.

The showing in pink represents the parts as they are embodied in the Joerissen plate model.

In both cases the lay-out was started with the common fixed center 13

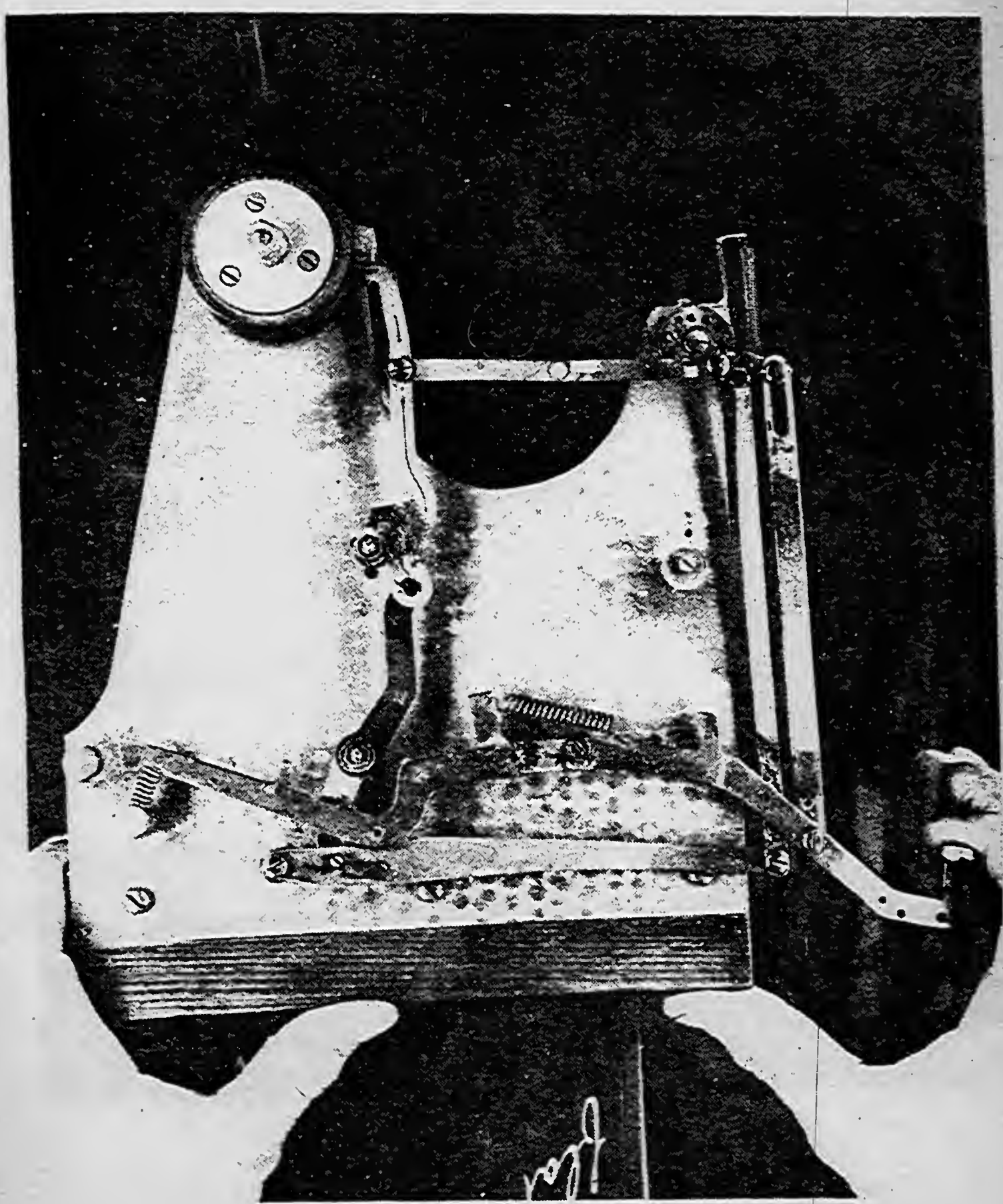

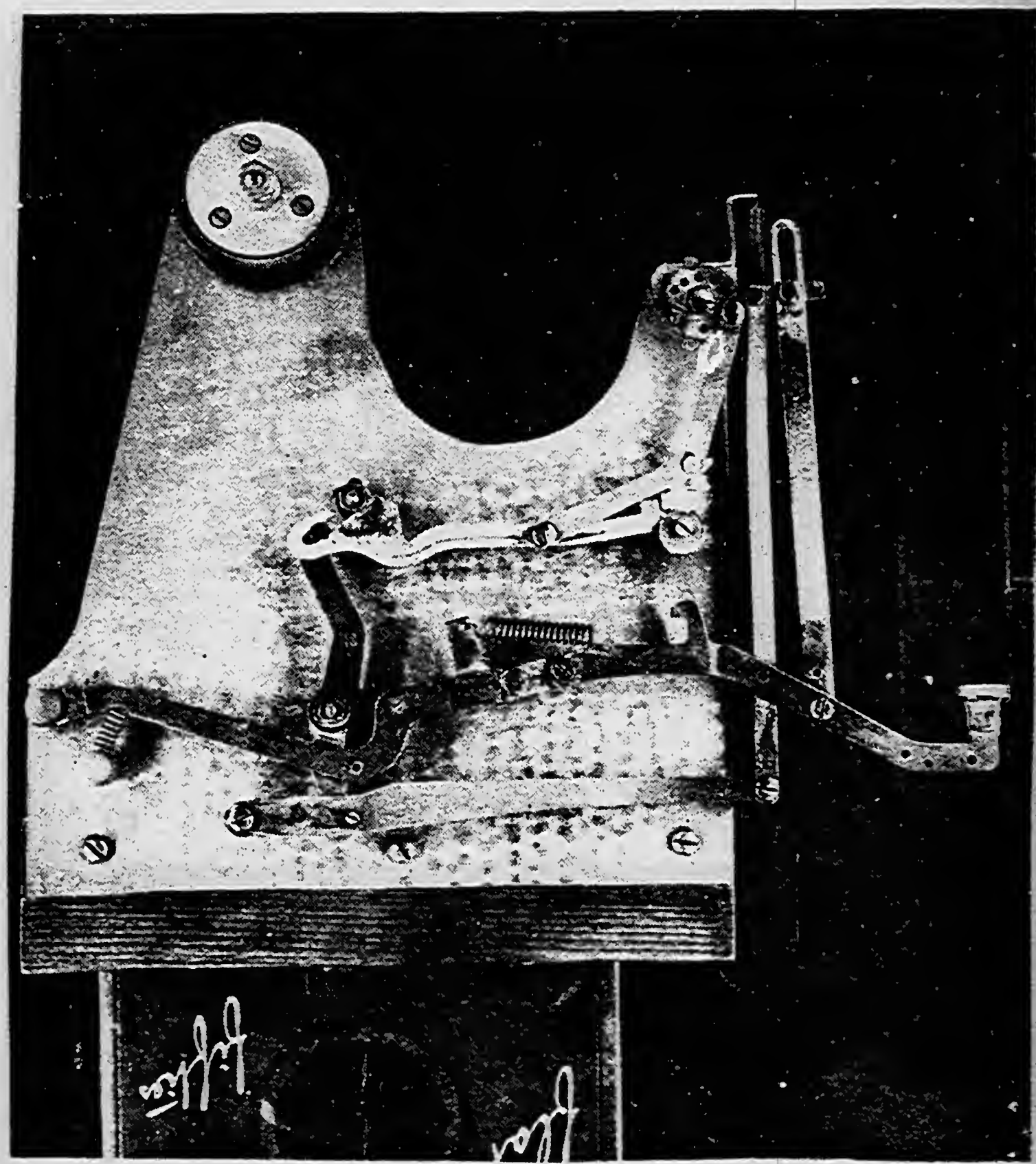

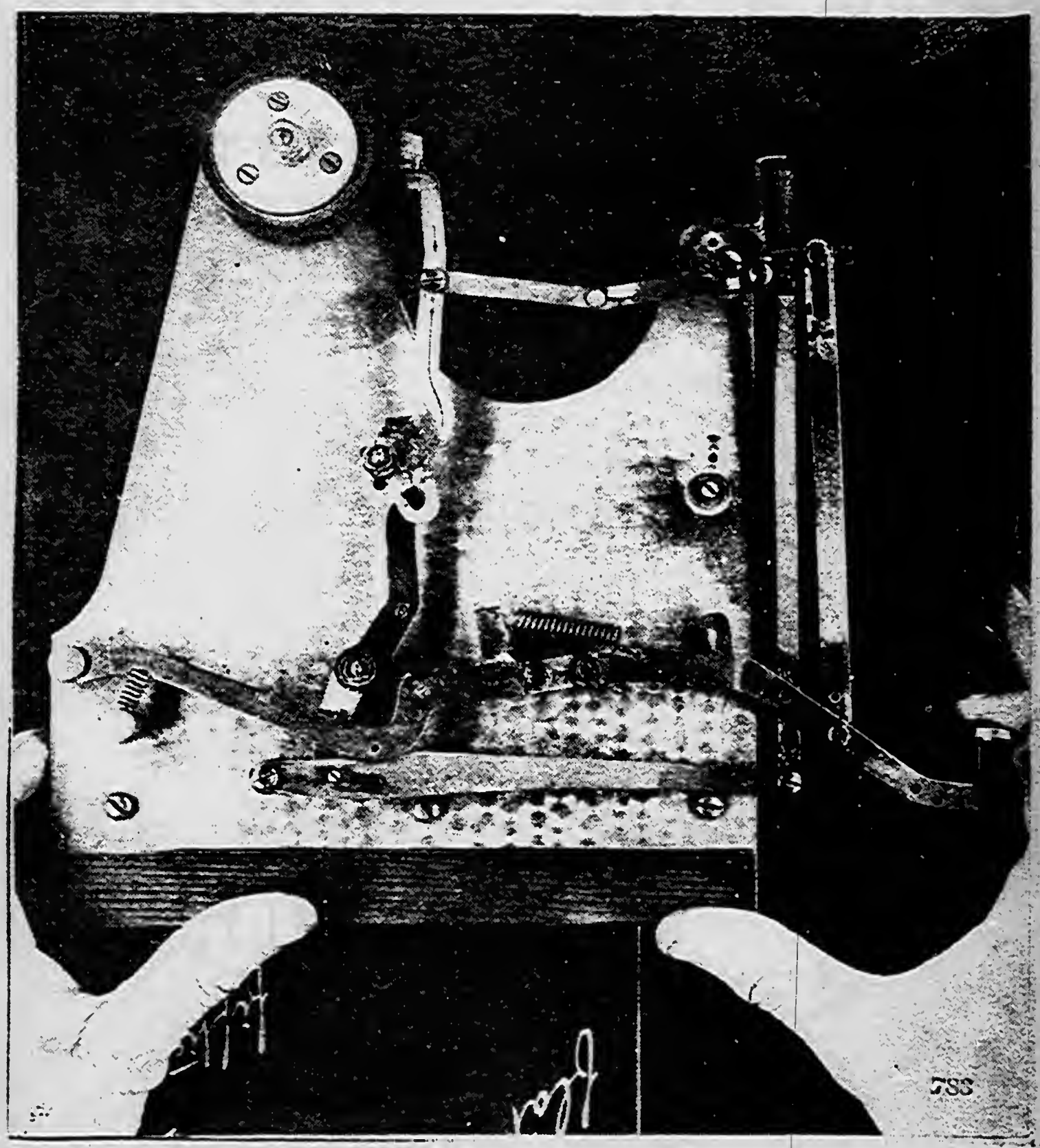
783

JOERISSEN PATENT REISSUE 19,076.

PARTS MOVED TO POSITION WHEREIN TOGGLE IS STRAIGHTENED TO CHECK TYPE BAR PRIOR TO PRINTING MOVEMENT.

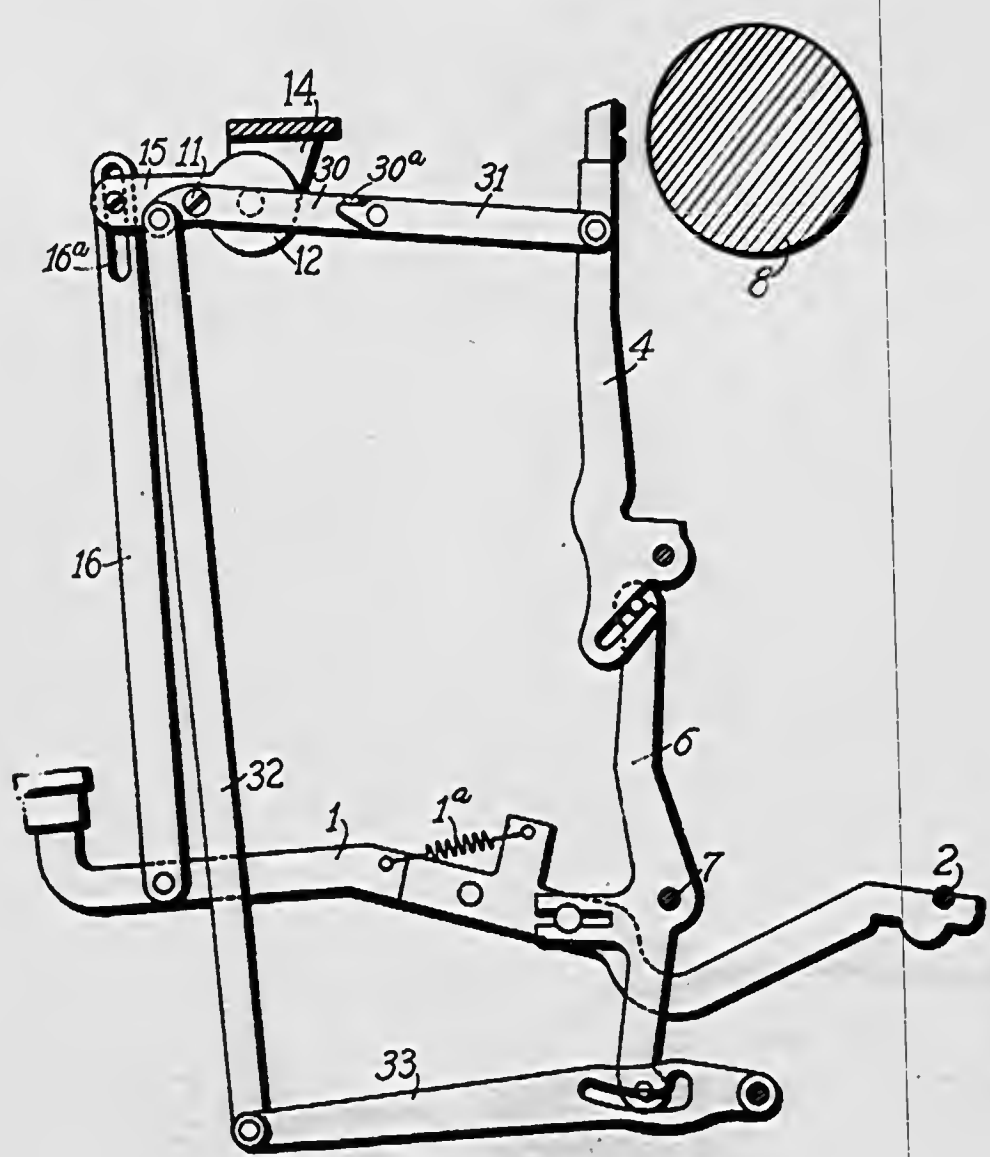

Fig. 1

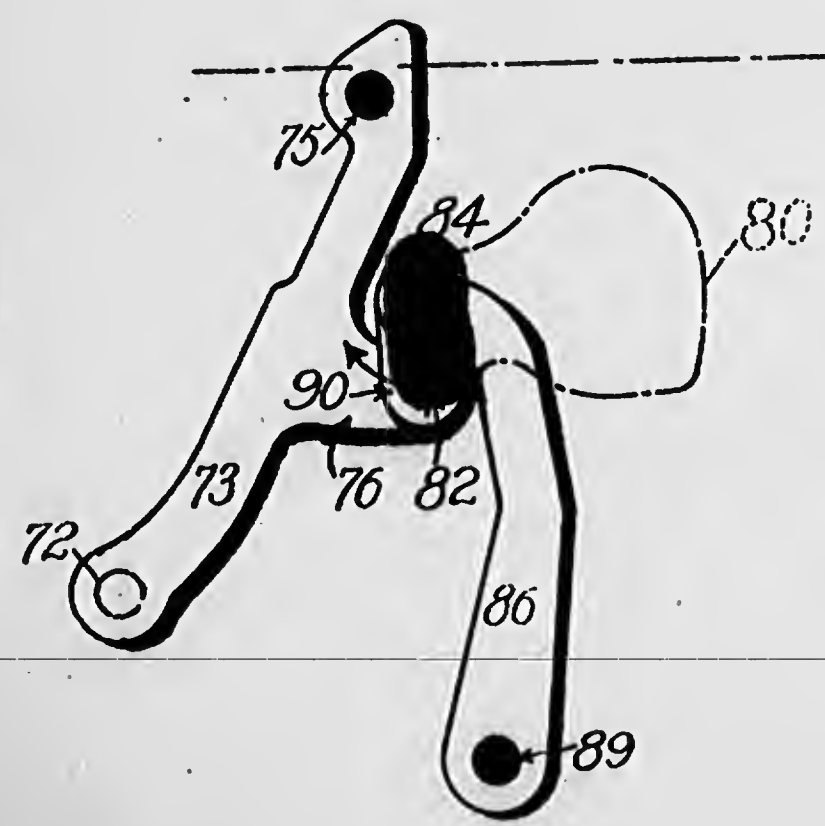

Fig. 3

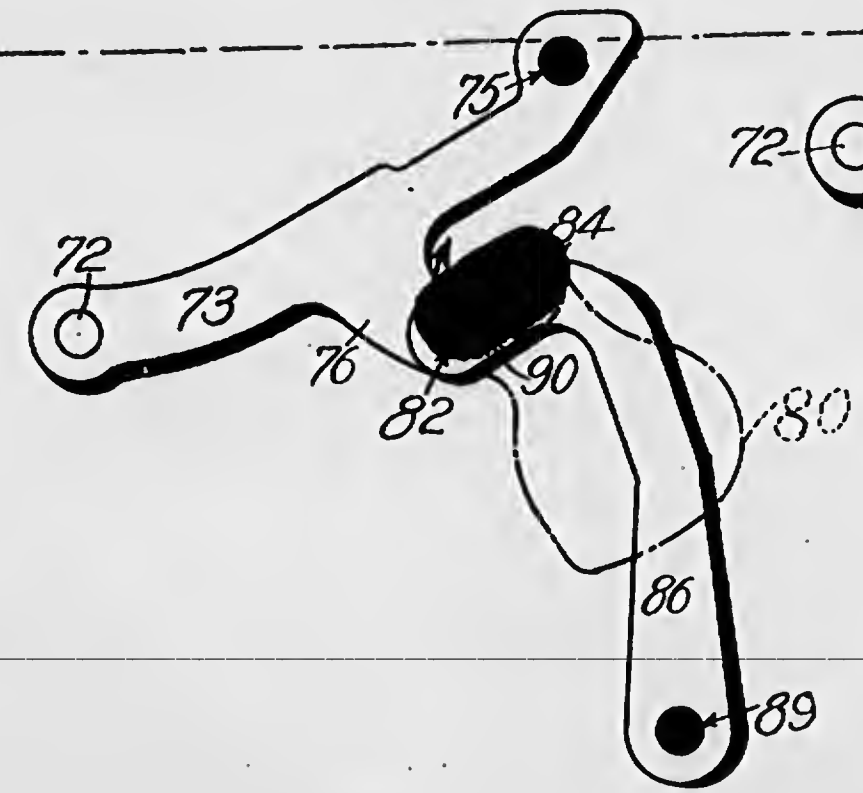

Fig. 3a

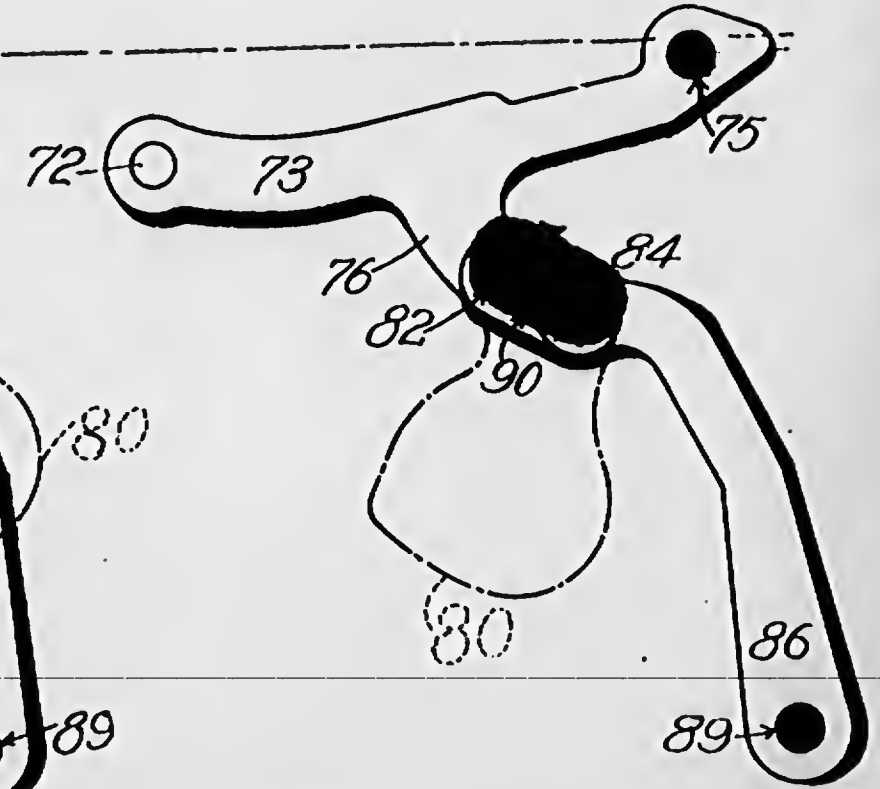

Fig. 1.

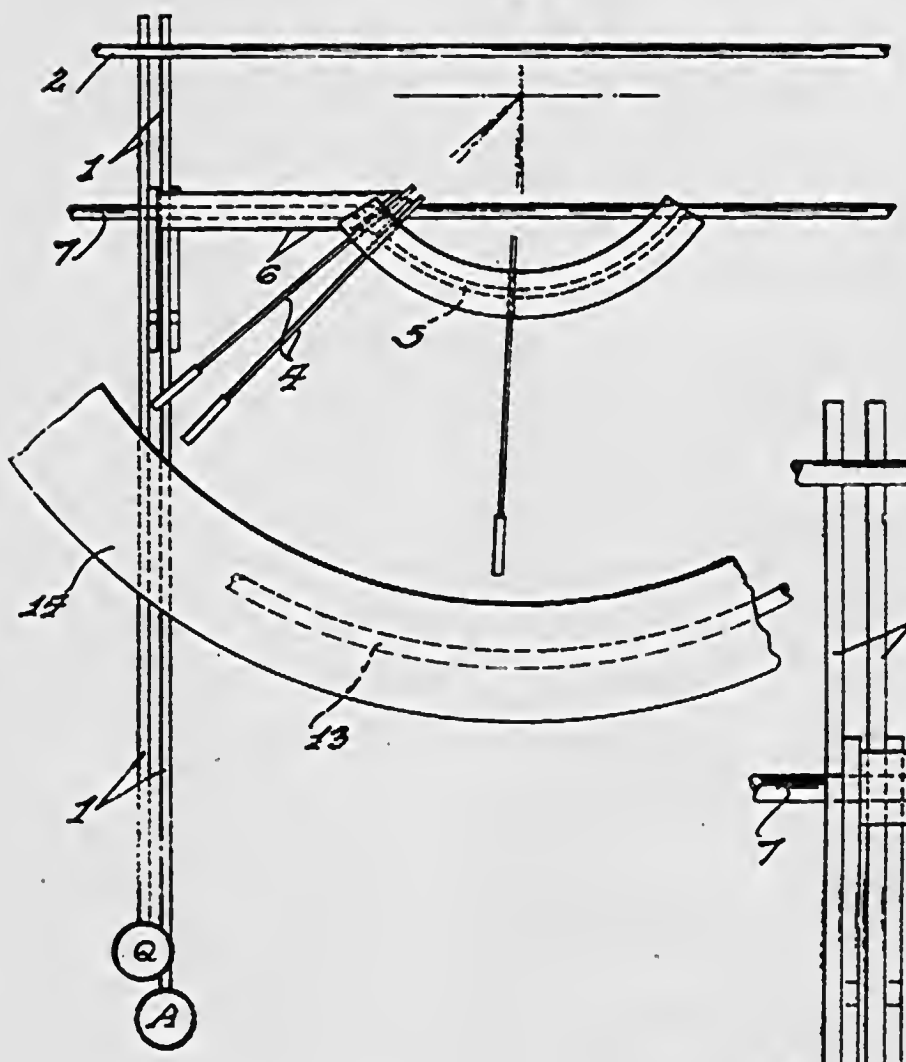

Fig. 2.

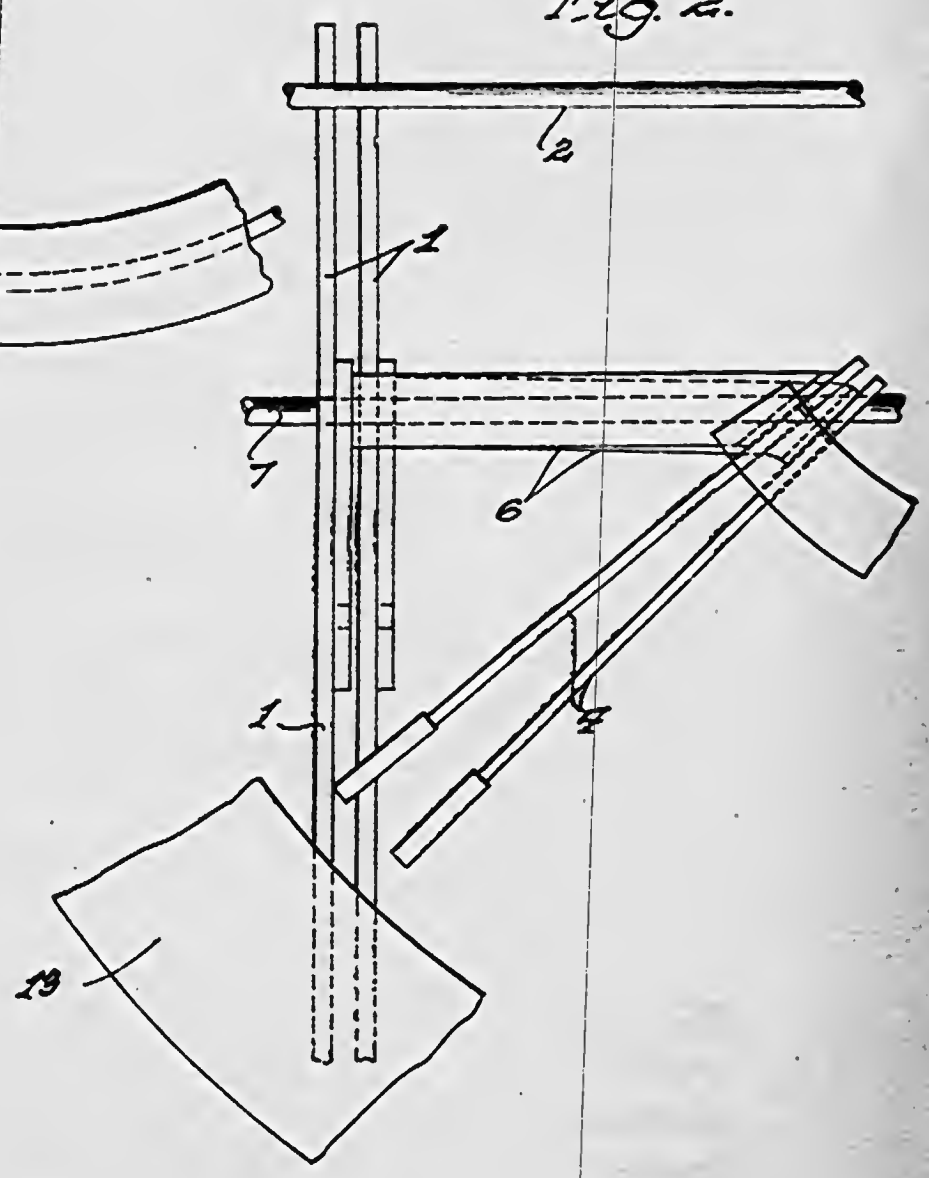

684

Copy

787 United States Court of Appeals for the District of Columbia

No. 6855.

CARL A. JOERISSEN *Plaintiff-Appellant*

vs.

REMINGTON RAND, INC., A Corporation of Maryland
REMINGTON RAND, INC., A Corporation of Delaware
Defendants-Appellees

STIPULATION AS TO RECORD

It is hereby stipulated by and between the parties in the above that the record as filed on October 2nd, 1936 with the Clerk of the Court be amended by deleting pages 223 to 231, pages 206 to 215, pages 333 to 342 and pages 428 to 434 for the purpose of removing unnecessary duplications of the Joerissen patents, copies of which are in evidence as Plaintiff's Exhibits Nos. 1, 2 and 6.

DOUGLAS, OBEAR, MORGAN & CAMPBELL

CUSHMAN, DARBY & CUSHMAN

By CUSHMAN, DARBY AND CUSHMAN,
Attorneys for Plaintiff.

T. A. HOSTETLER,
Attorney for Defendants.

October 20, 1936.

Endorsement: No. 6855 Carl A. Joerissen, Plaintiff-Appellant, vs. Remington Rand, Inc., a corporation of Maryland and Remington Rand, Inc., a Corporation of Delaware, Defendants-Appellees. Stipulation as to printing record. United States Court of Appeals for the District of Columbia. Filed Oct 21 1936 Moncure Burke, Clerk.

Endorsement on cover: No. 6855 Carl A. Joerissen, Appellant, vs. Remington Rand et al. United States Court of Appeals for the District of Columbia Filed Oct 2, 1936 Moncure Burke, Clerk